523-0768881-00211A

Rockwell
International

instruction book

Collins 479S-6A
VOR/ILS Signal Generator

This instruction book includes:

Description	*523-0768882*
Operation	*523-0768883*
Installation	*523-0768884*
Maintenance	*523-0768885*
Calibration Verification	*523-0768886*
IPL	*523-0769256*
Diagrams	*523-0769121*

Collins Government
Avionics Division
Avionics Group
Rockwell International
Cedar Rapids, Iowa 52498

Printed in the United States of America

Digitized by the Internet Archive
in 2025

https://archive.org/details/manualsplus_06268

523-0768881-00211A

Rockwell
International

instruction book

Collins 479S-6A
VOR/ILS Signal Generator

This instruction book includes:

Description	*523-0768882*
Operation	*523-0768883*
Installation	*523-0768884*
Maintenance	*523-0768885*
Calibration Verification	*523-0768886*
IPL	*523-0769256*
Diagrams	*523-0769121*

Collins Government
Avionics Division
Avionics Group
Rockwell International
Cedar Rapids, Iowa 52498

Printed in the United States of America

Caution

The material in this manual is subject to change. Before attempting any maintenance operation on the equipment covered in this manual, verify that you have complete and up-to-date publications by referring to the applicable Publications and Service Bulletin Indexes.

We welcome your comments concerning this instruction book. Although every effort has been made to keep it free of errors, some may occur. When reporting a specific problem, please describe it briefly and include the instruction book part number, the paragraph or figure number, and the page number.

Send your comments to: Publications Department
Collins Government
Avionics Division
Rockwell International
Cedar Rapids, Iowa 52406

Collins 479S-6A VOR/ILS Signal Generator

Rockwell International

description

Collins Government Avionics Division

Printed in USA

523-0768882-102118
2nd Edition, 1 October 1978
1st Revision, 15 October 1980

table of contents

Paragraph		Page
1.	*Introduction*	1
2.	*Design Features*	2
3.	*Purpose of Equipment*	2
4.	*Operational Capabilities*	2
5.	*Specifications*	3
6.	*Circuit Card and Module Assembly Location*	3
7.	*115/230-Volt AC, 50/60-Hz Operation*	3
8.	*Block Diagram Theory of Operation*	3
8.1	General	3
8.2	Overall Operation	15
8.3	Initial Power-On	17
8.4	Self-Test Mode Operation	17
8.5	VOR Mode Operation	18
8.6	Localizer (LOC) Mode Operation	19
8.7	Glideslope (GS) Mode Operation	20
8.8	Marker Beacon (MB) Mode Operation	20
8.9	VHF Communications (COMM) Mode Operation	20
8.10	Store/Recall Function	21
8.11	Remote Bus Programming Function	21
9.	*Functional Theory of Operation*	22
9.1	General	22
9.2	Microprocessor (CPU) Operation	22
9.2.1	General	22
9.2.2	Keyboard Scan	22
9.2.3	Keyboard DATA ENTRY Keys	22
9.2.4	Loop Operation	22
9.3	Front Panel Assembly A1 Operation	22
9.3.1	General	22
9.3.2	Keyboard Driver Board A1A1	25
9.3.3	Display Board A1A2 Operation	25
9.4	Audio Modulation Generator Operation	25
9.5	RF Section Operation	26
9.5.1	General	26
9.5.2	RF Frequency Selection	26
9.6	Power Supply Assembly A5 Operation	27
9.7	Remote Tune Board A8	27
9.8	Store/Recall Board A9	27
9.9	IEEE 488/1978 Interface Board-A10	27
10.	*Detailed Theory of Operation*	27
10.1	Introduction	27
10.2	Front Panel Assembly A1	27
10.2.1	General	27
10.2.2	Overall Operation	27
10.2.3	Keyboard/Driver Board A1A1	
10.3	Controller/Audio Assembly A2	38
10.3.1	General	38
10.3.2	Overall Operation	38
10.3.3	CPU Assembly A2A1	38
10.3.4	Analog Board A2A2	47
10.3.5	TDM Board A2A3	49
10.4	RF Modulator Assembly A3	55
10.4.1	General	55
10.4.2	RF Strip Line Assembly A3A1	55
10.4.3	Demodulator/ALC Assembly A3A2	56
10.4.4	Counter-I/O Board A3A3	60
10.5	Synthesizer Assembly A4	63
10.5.1	General	63
10.5.2	Variable Ratio Divider Circuit, P/O A4A1A1	65
10.5.3	VCXO and TCXO Circuits	68
10.5.4	Phase-Frequency Discriminator Circuit	70
10.5.5	Level Shifter (Loop Amplifier) Circuit	70
10.5.6	Loss-of-Lock Detector Circuit	70
10.5.7	Band Selector Circuit	70
10.5.8	VCO Assembly A4A3	70
10.5.9	RF Output Amplifier Circuit	70
10.5.10	+5- and +20-V DC Voltage Regulators	70
10.6	Power Supply Assembly A5	73
10.7	Remote Tune Board A8	73
10.7.1	Overall Operation	74
10.8	Store/Recall Board A9	74
10.8.1	General	74
10.8.2	Overall Operation	74
10.9	IEEE-488/1978 Bus Interface Board A10	81
10.9.1	General	81
10.9.2	IEEE-488/1978 Bus Operation	81
10.9.3	Overall Operation (A10 CPN 601-5883-001 only)	82
10.9.4	Overall Operation (A10 CPN 601-2309-001 only)	84

List of Effective Pages

*The asterisk indicates pages changed, added, or deleted by the current change.

Page No	Issue
*Title	15 Oct 80
*List of Effective Pages	15 Oct 80
*1	15 Oct 80
2 thru 3	1 Oct 78
*4 thru 5	15 Oct 80
6 thru 8	1 Oct 78
*9 thru 11	15 Oct 80
12 thru 13	1 Oct 78
*14 thru 15	15 Oct 80
16 thru 20	1 Oct 78
*21	15 Oct 80
22	1 Oct 78
*23	15 Oct 80
24 Blank	1 Oct 78
25 thru 26	1 Oct 78
*27	15 Oct 80
28 thru 29	1 Oct 78
30 Blank	1 Oct 78
31 thru 39	1 Oct 78
40 Blank	1 Oct 78
41	1 Oct 78
42 Blank	1 Oct 78
43	1 Oct 78
44 Blank	1 Oct 78
45	1 Oct 78
46 Blank	1 Oct 78
47 thru 51	1 Oct 78
52 Blank	1 Oct 78
53 thru 55	1 Oct 78

Page No	Issue
*56 thru 57	15 Oct 80
58 Blank	1 Oct 78
59	1 Oct 78
*60	15 Oct 80
61	1 Oct 78
62 Blank	1 Oct 78
63 thru 69	1 Oct 78
*70	15 Oct 80
71	1 Oct 78
*72	15 Oct 80
73 thru 75	1 Oct 78
76 Blank	1 Oct 78
77	1 Oct 78
78 Blank	1 Oct 78
*79	15 Oct 80
80 Blank	1 Oct 78
*81 thru 83	15 Oct 80
84 Blank	1 Oct 78
*85	15 Oct 80
86 Blank	1 Oct 78
*87 thru 89 Added	15 Oct 80
*90 Blank Added	15 Oct 80

Record of Revisions

RETAIN THIS RECORD IN THE FRONT OF MANUAL.
ON RECEIPT OF REVISIONS, INSERT REVISED PAGES IN THE MANUAL, AND ENTER DATE INSERTED AND INITIALS.

REV NO	REVISION DATE	INSERTION DATE/BY	SB NUMBER INCLUDED	REV NO	REVISION DATE	INSERTION DATE/BY	SB NUMBER INCLUDED
1st Ed	1 Sep 78		None				
2nd Ed	1 Oct 78		None				
1	15 Oct 80		1 thru 10				

1. INTRODUCTION

The 479S-6A VOR/ILS Signal Generator is a solid-state VOR/ILS signal generator. The signal generator produces both rf and audio signals for use in testing VOR, localizer, glideslope, marker beacon, and vhf communications receivers. Refer to figure 1.

There are four statuses of 479S-6A VOR/ILS Signal Generators. The -001 status is the standard signal generator, the -002 status incorporates a store/recall function, the -003 status incorporates the store/recall and an IEEE-488/1978 interface function, and the -004 status incorporates the four IEEE-488/1978 interface function. Unless noted otherwise, all information in this instruction book is applicable to all four statuses.

The following nonstandard abbreviations are used throughout this instruction book:

ABBREVIATION	DEFINITION
COMP	Composite
CPU	Central processing unit
dBc	Decibel below carrier
D/R	Down/right
DDM	Difference in depth of modulation

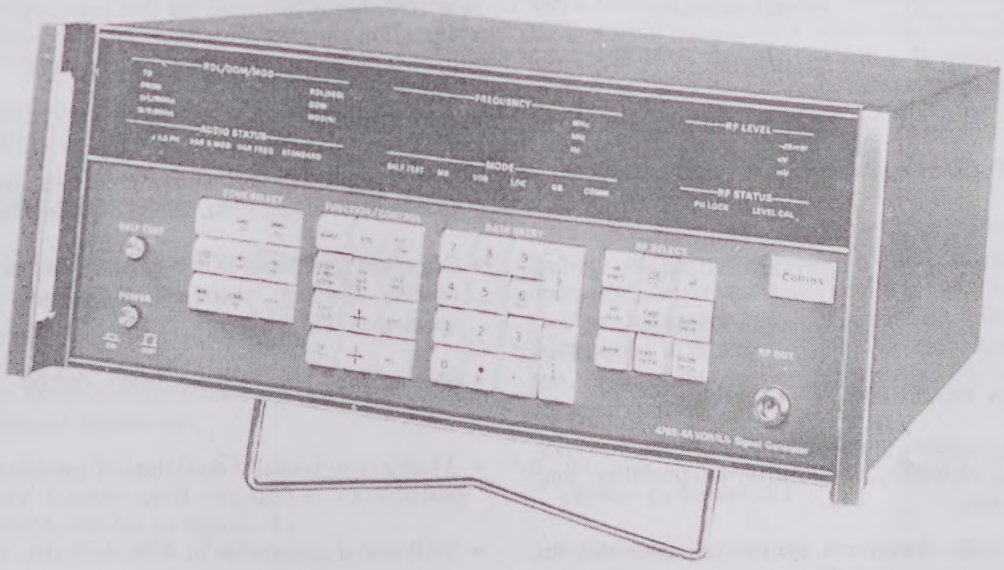

TP5-5333-017

479S-6A VOR/ILS Signal Generator
Figure 1

DEG	Degree
DEMOD	Demodulation
GS	Glideslope
LSB	Least significant bit
MB	Marker beacon
MOD	Modulation
MSB	Most significant bit
PCB	Printed circuit board
ROM	Read only memory
PROM	Programmable read only memory
EPROM	Erasable programmable read only memory
RSVD	Reserved
TCXO	Temperature-compensated crystal oscillator
T/F	TO/FROM
TI	Test instrument
U/L	Up/left
VCXO	Voltage controlled crystal oscillator
ΔF	Variable frequency

2. DESIGN FEATURES

- Microprocessor control and keyboard entry providing efficiency, versatility, adaptability, and convenience.
- Digital audio waveform synthesizer provides increased accuracy, stability, and longer calibration intervals.
- Synchronous detection and advanced design modulation loop generates precise, stable modulation levels.
- Low-noise rf frequency synthesizer allows accurate selectivity measurements.
- Extended life, digitally controlled attenuator.
- Preset operation for convenience and time-saving test setups.
- Complete digital readout of test parameters.
- Microstrip rf modulator.
- Automatic channel programming for receiver under test.
- Automatic processor memory check upon power-up or operator-controlled self-test.
- Built-in programmable audio oscillator.
- Optional growth features add stored programming and/or remote programming (IEEE 488) capability.

3. PURPOSE OF EQUIPMENT

The 479S-6A VOR/ILS Signal Generator produces all required audio modulation and rf carrier signals to test and troubleshoot VOR,ILS, and marker beacon receivers. It can also provide test signals for vhf communication monitor receivers and the receiver portions of vhf communication transceivers.

4. OPERATIONAL CAPABILITIES

- Preset condition sets signal generator parameters to standard outputs for selected mode of operation.
- Standard VOR and ILS localizer frequencies with 50-kHz spacing; standard glideslope frequency spacing of 150 kHz.
- Selectable VOR radials from 000.00 to 359.99 degrees.
- Ability to externally modulate rf section of the unit.
- VOR radial adjustable in +30, +10, -10, +0.01, and -0.01-degree increments.
- Preset 1020-Hz audio tone for identification signal.
- Programmable audio signal with a 30-Hz to 14-kHz range.

- Variable rf output level to check receiver sensitivity.
- Variable rf frequency to check receiver selectivity.
- Variable percent modulation to check receiver response.
- Variable DDM in 0.001 increments.
- Standard localizer and glideslope rf frequency pairings.
- Single key provides switching between localizer and glideslope paired frequencies and vice versa.
- Standard marker beacon frequency of 75.000 MHz with provisions for simulation of interference-type rf frequencies from 74.6 to 75.4 MHz.
- Preset 400-Hz (outer marker), 1300-Hz (middle marker), and 3000-Hz (inner marker) marker beacon audio tones.
- Remote tune output for automatic channel programming of receiver under test.
- Mode discrete outputs provide antenna switching and mode select/disable logic.
- Timing trigger output pulse coincident with any front panel keystroke for making time response measurements.
- Vhf-COMM receiver frequencies from 118.000 to 151.975 MHz with 25-kHz spacing.
- Functionally grouped controls and displays.
- 115/230-V, 50/60-Hz input power capability.

5. SPECIFICATIONS

Table 1 is a list of the specifications for the 479S-6A VOR/ILS Signal Generator.

6. CIRCUIT CARD AND MODULE ASSEMBLY LOCATION (Refer to figure 2.)

The signal generator major subassemblies are: front panel assembly A1, controller/audio assembly A2, rf modulator assembly A3, synthesizer assembly A4, power supply assembly A5, chassis assembly A6, backplane assembly A7, and remote tune assembly A8.

The -002 status contains an A9 store/recall assembly, and the -003 status contains the A9 plus an A10 IEEE-488/1975 interface assembly.

Front panel assembly A1 consists of driver board assembly A1A1 and display board assembly A1A2. Controller/audio assembly A2 consists of CPU board assembly A2A1, analog board assembly A2A2, and TDM board assembly A2A3. Rf modulator assembly A3 consists of rf strip-line assembly A3A1, demodulator/ALC board assembly A3A2, and counter-I/O board assembly A3A3. Synthesizer A4 consists of divider board and filter assembly A4A1, output amplifier board assembly A4A2, vco assembly A4A3, and texo assembly A4A4. Power supply assembly A5 consists of power supply terminal board assembly A5A1, power supply PCB assembly A5A2, heat sink assembly no 1 A5A3, heat sink assembly no 2 A5A4, and a blower. Chassis assembly A6 contains the interconnect wiring harness and a digitally controlled attenuator.

The front panel contains the switches, keyboard, displays, and type N coaxial connector required for operation of the signal generator and connection of receivers to be tested.

The rear of the signal generator contains a COMP BNC coaxial connector, an AUX BNC coaxial connector; a DEMOD BNC coaxial connector, an EXT MOD BNC coaxial connector; a REMOTE TUNE connector; an IEEE-488/1975 PROGRAM I/O connector; fuse F1; a 115/230-V ac, 50/60-Hz connector, and an input power identification plate.

7. 115/230-VOLT AC, 50/60-Hz OPERATION

Although the signal generator is shipped from the factory wired for 115-V ac, 50/60-Hz input power operation, the power transformer input wiring can be changed to provide 230-V ac, 50/60-Hz operation. If it is required to change to 230-V ac operation, refer to the maintenance section for disassembly and wiring changes required.

8. BLOCK DIAGRAM THEORY OF OPERATION (Refer to figure 3.)

8.1 General

The 479S-6A VOR/ILS Signal Generator is a microprocessor-controlled signal generator that produces audio-modulated rf signals and ARINC 410 2-of-5 tuning data. The rf output signals are used to test and troubleshoot VOR, localizer, glideslope,

Table 1. Equipment Specifications.

CHARACTERISTIC	SPECIFICATION
Physical and mechanical specifications	
Weight	19.95 kg (44 lb)
Dimensions	
Width	445 mm (17.5 in)
Height	178 mm (7.0 in)
Length	508 mm (20.0 in)
Connectors	
Front panel	
RF OUT	Type N, female
Rear panel	
AUX, DEMOD, COMP, and EXT MOD	Type BNC, female
REMOTE TUNE	37-pin dual-row Cannon type D
IEEE-STD 488/1978 PROGRAM I/O	Chassis connector per IEEE standard 448-1978
Cooling requirements	Internal blower
Environmental specifications	
Temperature	
Operating	+10 to +40 °C (+50 to +104 °F)
Storage	
-001	-20 to +85 °C (-4 to +185 °F)
-002/-003	-20 to +70 °C (-4 to +158 °F)
Humidity	<95%, relative
Electrical specifications	
Power requirements	
Voltage	115/230 V ac, ±10%
Frequency	47 to 63 Hz
Power	300 VA, maximum
Warmup time	30 min, maximum, for specified performance
Rf outputs	
Frequencies	
VOR/LOC	108.00 to 117.95 MHz, selectable in 50-kHz steps

Table 1. Equipment Specifications (Cont).

CHARACTERISTIC	SPECIFICATION
Glideslope (GS)	329.15 to 335.00 MHz, selectable in 150-kHz steps
Marker beacon	75.0 MHz fixed, 74.6 to 75.4 MHz, selectable in 25-kHz steps
Vhf communication	118.000 to 151.975 MHz, selectable in 25-kHz steps
Frequency vernier	Capable of varying selected output frequency up to ±one channel, all bands
Frequency resolution	Fixed, 1 kHz; vernier, 100 Hz
Frequency accuracy (fixed mode)	< ±2 ppm, (-10 to +40 °C (+50 to +104 °F)), including aging
Output level	
Range	
dB mW	-6 to -120 dB mW, variable in 1-dB increments
Voltage	112 mV to 0.22 μV, variable in 1-dB increments
Accuracy	
Note The following parameters apply to the marker beacon, VOR/LOC, and glideslope bands. Performance over the 118,000- to 151.975-MHz vhf communication band may be somewhat degraded.	
-6 to -60 dB mW	±1.5 dB
-60 to -120 dB mW	±2.0 dB
Vswr	<1.5:1
External attenuation	Not required; microvolt output is "hard microvolts" and eliminates 6-dB external attenuation requirement
Spectral purity	
Note The following parameters apply to the marker beacon, VOR/LOC, and GS bands. Performance over the 118,000- to 151.975-MHz vhf communication band may be somewhat degraded with respect to the VOR/LOC band specifications.	

Table 1. Equipment Specifications (Cont).

CHARACTERISTIC	SPECIFICATION
Harmonics	
VOR/LOC marker beacon	>30 dB below carrier
Glideslope	>25 dB below carrier
Spurious signals (excluding frequencies within ±15 kHz of carrier)	>80 dB below carrier
Broadband noise (SSB)	
	Note Broadband noise is specified in units of "dBc/Hz"; dBc/Hz = dB below carrier level measured in a 1-Hz noise bandwidth.
74.60 to 75.40 MHz (marker beacon)	>115 dBc/Hz >40 kHz from carrier
108.00 to 117.95 MHz (VOR/LOC)	>111 dBc/Hz >15 kHz from carrier >117 dBc/Hz >30 kHz from carrier >122 dBc/Hz >40 kHz from carrier
329.15 to 335.00 MHz (GS)	>112 dBc/Hz >50 kHz from carrier >119 dBc/Hz >80 kHz from carrier >122 dBc/Hz >120 kHz from carrier
VOR mode	
Modulation tones	
Frequencies	
Preset	30-Hz reference, 30-Hz variable, 9960-Hz, and 1020-Hz ident
Variable	
30-Hz variable, 30-Hz reference, 9960 Hz	Tones variable simultaneously ±5%. Resolution of the 30-Hz tones is 0.1 Hz. The 9960-Hz signal varies proportionally.
Aux audio	Variable from 30 Hz to 14 kHz (0.1-Hz steps from 30 Hz to 1 kHz, 1.0-Hz steps from 1 kHz to 14 kHz)
Frequency accuracy, preset, and variable	±0.005%
Distortion (audio)	
Preset mode (30% modulation per tone)	
30-Hz reference and 30-Hz variable	<0.25%
9960 Hz and 1020 Hz ident	<0.5%
Aux audio	<1.0%

Table 1. Equipment Specifications (Cont)

CHARACTERISTIC	SPECIFICATION
Variable mode (5 to 35% modulation per tone)	
30-Hz variable	±1.[illegible]
9960 Hz	±1.[illegible]
Aux audio	<2.0%
9960-Hz FM deviation	480 ±2-Hz peak
Radial range	000.00 to 359.99 degrees (selectable at each 30-degree heading or in 0.01-degree increments, variable in preset steps of ±30 degrees, ±10 degrees, and ±0.01 degree)
Radial accuracy	
0°	±0.01 degree (settable to ±0.005 degree)
Tracking (000.00 to 359.99°)	±0.01 degree referenced to 0-degree reading *Note* Audio radial accuracy is referenced to accuracy of standard used in calibration.
Amplitude modulation	
Range (per tone)	
1020-Hz ident	30% fixed
30-Hz variable, 9960-Hz	Preset at 30%, variable 5 to 35% in 0.1% increments
Aux audio (30 Hz to 14 kHz)	Preset at 30%, variable 5 to 35% in 0.1% increments
Accuracy	
1020 Hz (fixed at 30%)	±2.5% of indication
30-Hz variable, 9960-Hz	
Preset	±2.5% of modulation
Variable (5 to 35%)	±5% of indication
Aux audio	
Preset	±5% of indication
Variable (5 to 35%)	±7% of indication
Tone distortion (rf)	
Preset (30% modulation)	
30-Hz variable	<1.0%

Table 1. Equipment Specifications (Cont).

CHARACTERISTIC	SPECIFICATION
1020-Hz ident	<1.0%
9960 Hz	<1.5%
Aux audio (30 Hz to 14 kHz)	<2.0%
Variable (5- to 35-% modulation)	
30-Hz variable	<1.5%
9960 Hz	<2.0%
Aux audio (30 Hz to 14 kHz)	<3.0%
Total VOR demodulated error	<±0.05 degree of selected radial (referenced to accuracy of standard used in calibration)
Localizer mode	
Modulation tones	
Frequencies	
Preset	90-Hz, 150-Hz, and 1020-Hz ident
Variable	
90/150 Hz	Both tones variable simultaneously ±5% in 0.1-Hz increments
Aux audio	Variable from 30 Hz to 4 kHz (0.1-Hz steps from 30 Hz to 1 kHz, 1.0-Hz steps from 1 to 4 kHz)
Frequency accuracy	±0.005%
Distortion (audio)	
Preset mode	
90/150-Hz (20-% modulation per tone)	<0.25%
1020-Hz (30-% modulation)	<0.5%
Aux audio (30-% modulation)	<1.0%
Variable mode	
90/150-Hz (5 to 40-% modulation)	<1.0%
Aux audio (5 to 30-% modulation)	<1.5%
90/150-Hz phase	
Fixed	0.0 ±1 degree
Selectable	60 ±2 degrees

Table 1. Equipment Specifications (Cont).

CHARACTERISTIC	SPECIFICATION
	Note The 90- and 150-Hz waveforms pass through 0 in the same direction, with 0 or 60 degrees of phase relative to the 150-Hz component, every half-cycle of the combined 90- and 150-Hz waveform.
Amplitude modulation	
Range (per tone)	
90 and 150 Hz	
Preset	20%
Variable	5 to 40% in 0.1-% increments
1020-Hz ident	30% fixed
Aux audio	
Preset	30%
Variable	5 to 30% in 0.1-% increments
Accuracy	
90 and 150 Hz	
Preset	±2.5% of indication
Variable	±5% of indication
1020-Hz ident	±2.5% of indication
Aux audio	
Preset	±5% of indication
Variable	±7% of indication
Tone distortion (rf)	
90 and 150 Hz	
Preset	<1.0%
Variable	<1.5%
1020-Hz ident	<1.0%
Aux audio	
Preset	<1.5%
Variable	<3.0%

Table 1. Equipment Specifications (Cont).

CHARACTERISTIC	SPECIFICATION
DDM	
Preset	0.000
Selectable settings	0.000, ±0.046, ±0.093, ±0.155, and ±0.200
Variable range	±0.400 in 0.001-increments
Audio error	
On course	0.0001 DDM
Off course	0.0002 to 0.200 DDM 0.0002 +0.05% DDM from 0.201 to 0.375 DDM 0.25% DDM maximum from 0.376 to 0.400 DDM
Total system error (audio + modulation)	
On course	0.00056 DDM
Off course	0.00056 DDM + 2.5-% DDM
Glideslope mode	
Modulation tones	
Frequencies	
Preset	90 Hz and 150 Hz
Variable	
90/150 Hz	Both tones variable simultaneously ±5 percent in 0.1-Hz increments.
Aux audio	Variable from 30 Hz to 4 kHz (0.1-Hz steps from 30 Hz to 1 kHz, 1.0-Hz steps from 1 to 4 kHz)
Frequency accuracy	±0.005%
Distortion (audio)	
Preset mode	
90/150 Hz (40-% modulation per tone)	<0.25%
Aux audio (30-% modulation)	<1.0%
Variable mode	
90/150 Hz (10 to 80-% modulation)	<1.0%
Aux audio (10 to 60-% modulation)	<1.5%
90- and 150-Hz phase	
Fixed	0.0 ±1 degree
Selectable	60 ±2 degrees

Table 1. Equipment Specifications (Cont)

CHARACTERISTIC	SPECIFICATION
	Note The 90- and 150-Hz waveforms pass through 0 in the same direction, with 0 or 60 degrees of phase relative to the 150-Hz component, every half-cycle of the combined 90- and 150-Hz waveform.
Amplitude modulation	
Range (per tone)	
90 and 150 Hz	
Preset	10%
Variable	10 to 80% in 0.1-% increments
Aux audio	
Preset	30%
Variable	10 to 60% in 0.1-% increments
Accuracy	
90 and 150 Hz	
Preset	±2.5% of indication
Variable	±5% of indication
Aux audio	
Preset	±5% of indication
Variable	±7% of indication
Tone distortion (rf)	
90 and 150 Hz	
Preset	< 1.2%
Variable	< 3.0%
Aux audio	
Preset	<2.0%
Variable	<3.0%
DDM	
Preset	0.000
Selectable settings	0.000, ±0.045, ±0.091, ±0.175, and ±0.400
Variable range	±0.800 in 0.001-increments

Table 1. Equipment Specifications (Cont).

CHARACTERISTIC	SPECIFICATION
Audio error	
On course	0.0001 DDM
Off course	0.0002 DDM to 0.400 DDM 0.0002 DDM +0.05% DDM from 0.401 to 0.750 DDM 0.25 percent DDM maximum from 0.751 to 0.800 DDM
Total system error (audio + modulation)	
On course	0.00102 DDM
Off course	0.00102 DDM + 2.5% DDM
Marker beacon	
Modulation tones	
Frequencies	
Preset	
Outer marker	400 Hz
Middle marker	1300 Hz
Inner marker	3000 Hz
Variable	
Aux audio	Variable from 100 Hz to 4 kHz (0.1-Hz steps from 100 Hz to 1 kHz, 1.0-Hz steps from 1 to 4 kHz)
Frequency accuracy	±0.005%
Distortion (audio)	< 1%, preset and variable frequencies, 15- to 97-% modulation
Amplitude modulation	
Range	
400, 1300, and 3000 Hz	
Preset	95%
Variable	90 to 97% in 0.1-% increments
Aux audio	
Preset	95%
Variable	15 to 97% in 0.1-% increments

Table 1. Equipment Specifications (Cont)

CHARACTERISTIC	SPECIFICATION
Accuracy	
400, 1300, and 3000 Hz	
Preset	±5% of indication
Variable	±6.5% of indication
Aux audio	
Preset	±5.5% of indication
Variable	±7% of indication
Tone distortion	
Preset 400, 1300, and 3000 Hz	<4%
Aux audio	5% maximum
Vhf COMM	
Modulation tones	
Preset	1020 Hz
Variable	30 Hz to 10 kHz (0.1-Hz steps from 30 Hz to 1 kHz, 1.0-Hz steps from 1 to 10 kHz)
Frequency accuracy	±0.005%
Distortion (audio)	<2.0%, preset 1020 Hz at 30%, variable frequencies from 5 to 35%
Amplitude modulation	
Range	
Preset 1020 Hz	30%
Variable 10 Hz to 10 kHz	5 to 35% in 0.1-% increments
External modulation	
Input impedance	5 kΩ minimum
Maximum modulation depth	90%
Modulation distortion	4% maximum
Modulation bandwidth	
Marker beacon	DC - 4 kHz
Localizer	DC - 4 kHz
Glideslope	DC - 4 kHz
VOR	DC - 15 kHz
Vhf COMM	DC - 15 kHz
Remote tune	
Tuning format	2-of-5 in accordance with ARINC 410
Selection method, tuning, and mode	Spst relay closure with maximum contact rating of 28 V dc at 100 mA
Timing trigger	TTL level positive pulse, coincident with any keystroke

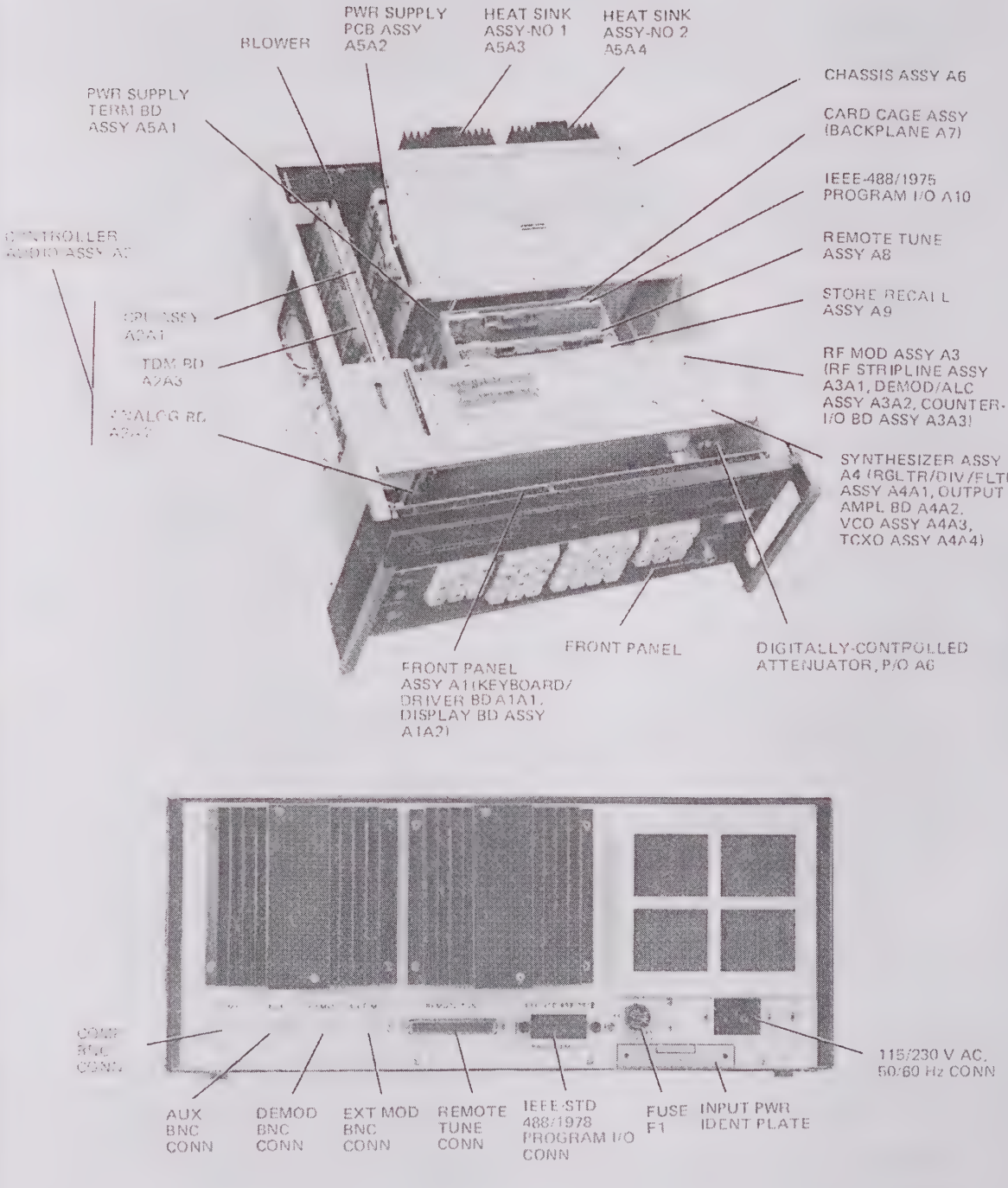

Circuit Card and Module Assembly Locations
Figure 2

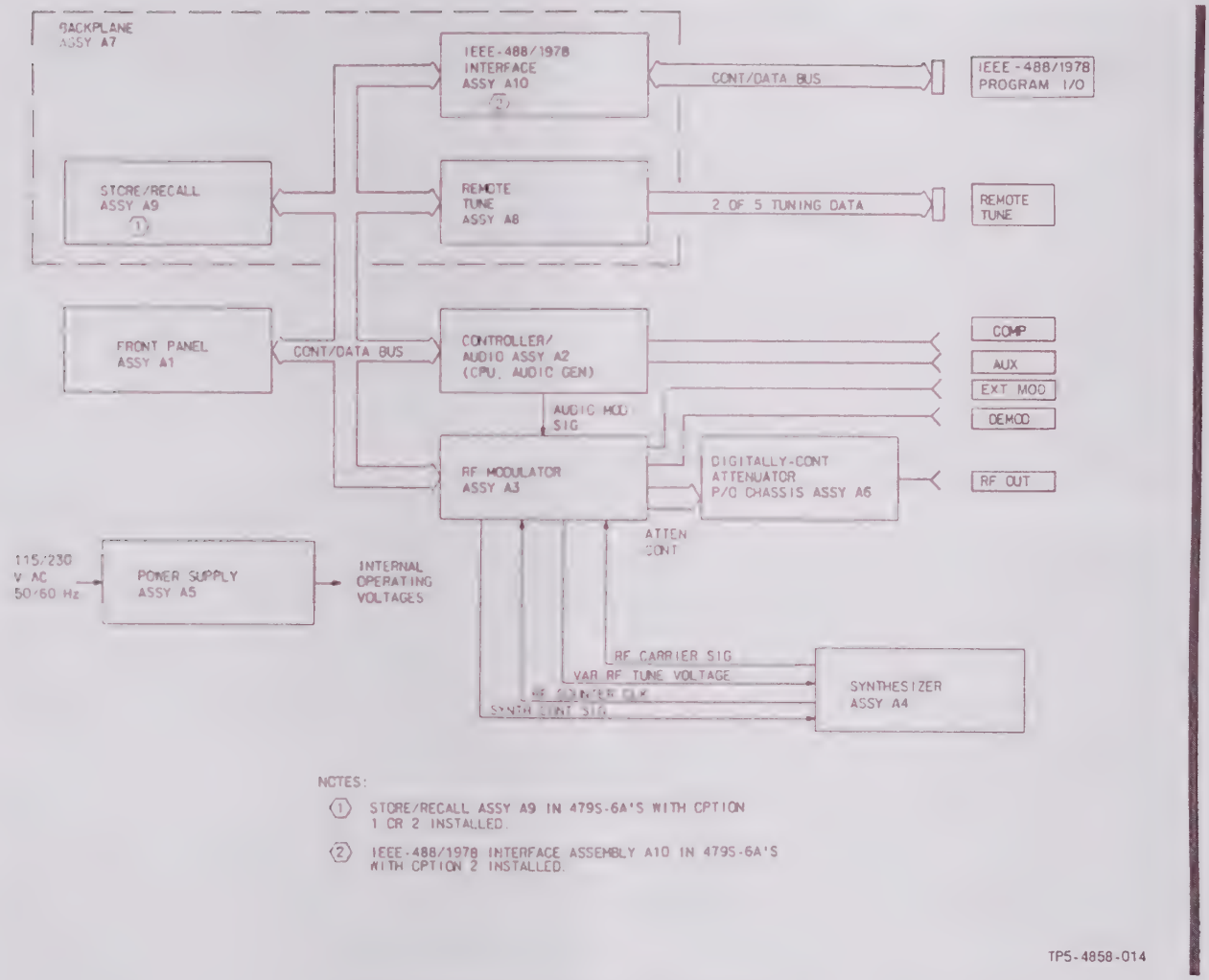

479S-6A VOR/ILS Signal Generator, Block Diagram
Figure 3

marker beacon, and vhf communication receivers. Selection of the desired rf (carrier) frequency automatically places the signal generator in the correct mode of operation and preset condition for that mode of operation. Two-of-five tuning data is automatically provided at the rear connector for tuning the receiver under test to the channel corresponding with the selected rf frequency. When a glideslope frequency is selected, 2-of-5 tuning data corresponding to the paired localizer channel is provided.

8.2 Overall Operation

The receiver under test is connected to the RF OUT connector on the signal generator front panel. The signal produced by the signal generator is applied through the RF OUT connector to the receiver under test.

Front panel assembly A1 contains a keyboard and displays that provide the operator interface with the signal generator. All operator instructions are entered through the keyboard, and all signal generator test parameters are indicated on the displays.

Controller/audio assembly A2 contains a microprocessor, memory circuits, and an audio generator. The microprocessor is interconnected to the internal signal generator circuits through a parallel control bus. The parallel control bus consists of an 8-bit data bus, an 8-bit address bus, and a 2-line

I/O read/write bus. The microprocessor executes the instructions stored in the memory circuits to control the audio generator and other signal generator functions.

The microprocessor is interrupted with an internally generated 4-ms interrupt. At each 4-ms interrupt, the keyboard is scanned to determine if any entries have been made. After valid keystrokes are recognized, the microprocessor verifies that the entries are within the functional capability of the signal generator and/or program. The microprocessor then transmits operating instructions over the control bus to the signal generator circuits.

The audio generator circuits, contained on controller/audio assembly A2, produce the required AM audio tones to modulate the rf carrier signal.

The amplitude of the audio signals is adjusted to provide the required modulation percentage. Audio signals are combined, when required, to produce composite audio signals to modulate the rf carrier frequency. The composite signal produced in the VOR mode consists of a combined 30-Hz variable AM signal and a 9960-Hz FM (30-Hz reference) signal. The composite signal produced in the ILS mode consists of a combined 90- and 150-Hz AM signal. The relative amplitude of the audio signals is adjusted in the ILS mode to produce the desired difference in depth of modulation (DDM). Single tones are provided in the marker beacon and VHF COMM modes. In the VOR mode, the phase between the audio signals is adjusted to produce the selected VOR radial.

The audio generator decodes instructions received from the microprocessor, via the control bus, and produces the required audio signals with the correct signal amplitude and phase. The audio, or composite audio modulation signal, is applied to rf modulator assembly A3.

Front panel assembly A1 processes the data received from the microprocessor via the control bus, and produces displays in the RDL/DDM/MOD and AUDIO STATUS displays indicating the audio modulation parameters produced by the audio generator. The applicable keys are lit for the audio tones generated.

Rf modulator assembly A3 processes data received from the microprocessor via the control bus, to produce rf frequency control signals that are applied to synthesizer assembly A4 and attenuation control signals that are supplied to the digitally controlled attenuator on chassis assembly A6.

Synthesizer assembly A4 uses the rf frequency control signals to produce the selected rf carrier frequency. The rf carrier frequency is applied to rf modulator assembly A3.

Rf modulator assembly A3 combines the carrier frequency with the audio modulation signal, either internally generated or provided from EXT MOD, to produce a simulated ground station signal. The modulated rf signal is supplied to the digitally controlled attenuator on A6.

The control signal supplied to the attenuator determines the amount of attenuation required to provide an rf output signal with the selected output level at the RF OUT connector.

Rf modulator assembly A3 counts the frequency of the rf carrier signal generated by A4 and supplies the information back to the microprocessor over the control bus. The microprocessor supplies the rf carrier frequency and rf output level parameter information to front panel assembly A1 over the control bus. Front panel assembly A1 uses the information from the microprocessor to indicate the rf carrier frequency in the FREQUENCY display, mode of operation in the MODE display, and rf output level in the RF LEVEL display.

Rf modulator assembly A3 and synthesizer assembly A4 produce monitor signals that are transmitted over the control bus to the microprocessor and from the microprocessor over the control bus to front panel assembly A1. The monitor signals are displayed in the RF STATUS display and indicate that the synthesizer is locked on the selected frequency, and that the output of the rf modulator is within specific limits.

The signal is applied from the RF OUT connector to the receiver under test. Controller/audio assembly A2 supplies composite and auxiliary signals to connectors on the rear of the signal generator. The composite signal consists of the generated combined audio modulation signals and the auxiliary signal is a 30-Hz reference signal (VOR mode only).

Rf modulator assembly A3 supplies a demodulation signal to a connector on the rear of the signal generator. The demodulation signal is the detected audio modulation (rf carrier removed).

Remote tune assembly A8 processes the data received from the microprocessor via the control bus, to produce 2-of-5 tuning data outputs in the ARINC 410

tuning format, mode control outputs, and a scope trigger output. The outputs are available at the REMOTE TUNE connector on the rear of the signal generator for automatic tuning of the receiver under test. Entry of a glideslope frequency will cause the paired localizer frequency to be output on the 2-of-5 lines. The 2-of-5 data output remains unchanged when the selected rf frequency is varied for off-channel testing. The output logic for the mode control signals is listed in table 2. Mode select A and B lines are intended for use in switching rf antenna relays. A scope trigger pulse output is provided, occurring coincident with front panel keystrokes.

8.3 Initial Power-On

On initial signal generator turn-on, the controller memories (RAM's and ROM's) are checked automatically. All displays, except SELF TEST light, are blank during the memory check, unless a memory output is incorrect. If the outputs from the controller memories are correct, the signal generator switches to the VOR mode preset condition with an rf carrier frequency of 108.000 MHz and a 50-dB mW rf output level. When the signal generator completes the memory check and switches to the VOR mode preset condition, the operator is assured that the signal generator is programmed correctly and is ready for testing or troubleshooting VOR, ILS, marker beacon, or communication receivers. If one of the RAM's has failed, the RF LEVEL display will indicate the RAM that has failed (...1). The signal generator will begin another RAM check and will continue to sequence until malfunction is cleared. If an output from one of the controller ROM memories is incorrect, the memory check stops. The RDL/DDM/MOD display will indicate the number of the ROM that is malfunctioning. The RDL/DDM/MOD display and SELF TEST indicator flash on and off to alert the operator that a memory (ROM) output is incorrect and that the memory check has stopped. The signal generator is inoperable and must be repaired before any further operations can be performed.

8.4 Self-Test Mode Operation

In the self-test mode, the signal generator checks all display segments, indicators, and key lamps, and then performs a check of the controller memory (ROM) outputs. When the SELF TEST switch on the front panel is initially depressed, a lamp check is performed; and when the switch is released, the memory output (ROM) check is performed. The displays, indicators, and keys remain lit as long as the SELF TEST switch is held depressed.

During the lamp check, all indicators and key lamps under designated key caps are lit and the 7-segment displays indicate 0.8 for each digit in the display. The memory output (ROM) check is indicated by sequential indications in the RDL/DDM/MOD display. All other displays are blank during the memory output (ROM) check. If the outputs from the controller memories (ROM's) are correct, the signal generator switches to the initial power-on status, checks the RAM's, rechecks the ROM's, and then switches to the VOR mode preset condition with an rf carrier frequency of 108.000 MHz and a -50-dB mW rf output level. (When the signal generator switches to the VOR mode preset condition, the operator is assured that the signal generator is programmed correctly and is ready for testing or troubleshooting VOR,ILS, marker beacon, or vhf communication receivers.) If a memory output is incorrect, the indications are the

Table 2. Mode Control Logic.

MODE	COMM DISABLE	MODE SELECT B	LOC/GS ENERGIZE	NAV DISABLE	MODE SELECT A
VOR	X	X	0	0	0
LOC	X	X	X	0	0
COMM	0	X	0	X	X
GS	X	0	X	0	X
MB	X	0	0	0	0

X = Relay closure; 0 = relay open.

same as described during initial power-on in paragraph 8.3. During self-test, the rf output is automatically disabled (turned off).

8.5 VOR Mode Operation

When a standard VOR rf carrier frequency is initially selected, the signal generator automatically switches to the VOR mode and to the VOR mode preset condition.

The rf output signal from the signal generator simulates a VOR ground station signal and in the preset condition, provides an audio modulated, rf output signal with the following parameters.

SIGNAL CHARACTERISTIC	OUTPUT PARAMETER
VOR rf carrier frequency	Selected standard VOR ground station frequency
Rf carrier modulation	30-Hz variable AM/9960-Hz FM (30-Hz reference) composite audio signal
Amplitude (%) modulation	30.0%
VOR radial	000.00 degree
TO or FROM status indicator	FROM
Output level	-50 dB mW (If the output level is changed after initial power-on or after self-test, the level remains at the selected level.)

Rf channel frequencies are normally entered via the DATA ENTRY keyboard. Use of the RF FREQ key, however, allows selection of sequential VOR channels using a single keystroke. With modulation on, only consecutive VOR channels are selected. With modulation off, sequential localizer carrier frequencies in the 108.10- to 111.95-MHz range are also selected.

The rf carrier frequency is variable up to ±1-channel spacing for checking receiver selectivity. Using the slew keys, the carrier frequency can be varied in either direction at a fast or a slow rate depending on test requirements. The desired off-channel rf carrier frequency may also be selected via the data entry keyboard in 1-kHz increments.

The rf output level is adjustable from -6 to -120 dB mW to allow operator selection of the output level required to meet test requirements for receiver response. The output level can be increased or decreased in either 1- or 10-dB steps as required by the operator.

VOR radials are selectable from 000.00 to 359.99 degrees in 0.01-degree steps to provide precise and accurate radials for checking or aligning the receiver under test. The radial can be set to major headings at every 30 degrees and then stepped from that point in +30-, +10-, -10-degree steps or slewed in ±0.01-degree steps, as required to check the receiver.

Note

Radials are expressed in degrees and are 180 degrees out of phase from the aircraft bearing to the station. An RMI bearing indicator will point to a bearing 180 degrees out of phase with the selected radial, thus the tail of the bearing pointer should indicate the selected radial.

The amplitude (%) modulation of the simulated VOR signal is adjustable from 5.0 to 35.0 percent in 0.1-percent increments to check receiver response. Independent control for modulation adjustments of the 30-Hz VAR and 9960-FM tones is also provided.

The TO/FROM indication is determined by the phase relationship of the composite audio VOR signal and is always a FROM signal on initial selection of the VOR mode. Through keyboard entry, the FROM signal can be changed to a TO signal, which phase shifts the VOR bearing signal by 180 degrees.

A 1020-Hz audio tone, which simulates an identification signal, can be added to the VOR rf output signal at 30 percent modulation by keyboard entry. Additionally, a 1020-Hz or a 30-Hz to 14-kHz auxiliary audio tone is available. (For specialized tests, entries are allowed down to 10-Hz; however, operation is only specified over the 30-Hz to 14-kHz range.) The operator may add or remove the signal as required during receiver checks. The auxiliary audio tone amplitude (%) modulation is adjustable in 0.1-percent increments from 5 to 35 percent. The 1020-Hz ident tone amplitude (%) modulation, when selected, is fixed at 30 percent.

Either or both of the 30-Hz variable or 9960-Hz FM signals can be removed as required to perform receiver flag checks.

The frequencies of the 30-Hz variable, 30-Hz reference, and 9960-Hz signals are adjustable ±5.0 percent. (Entries over a ±10-percent range are allowed for specialized testing; however, operation is only specified over the ±5-percent range.) Selection in 0.1-Hz increments of the 30-Hz variable signal frequency changes the 30-Hz reference the same amount and also varies the 9960-Hz signal proportionally.

Any time information displayed in the RDL/DDM/MOD and AUDIO STATUS displays is changed from the preset condition, the rf carrier frequency is slewed from the selected rf carrier frequency or the rf output is turned off, and it is desired to return the signal generator to a preset condition, a single entry using the STD key returns the signal generator to the preset condition for the selected rf carrier frequency. The rf output level is not affected by the STD key and remains at the last selected output level.

For detailed operating procedures and detailed information on the controls and indicators, refer to the operation section.

8.6 Localizer (LOC) Mode Operation

When a standard localizer rf carrier frequency is initially selected, the signal generator automatically switches to the LOC mode and to the LOC mode preset condition. The rf output signal from the signal generator simulates a localizer ground station signal and in the preset condition provides an audio modulated, rf output signal with the following parameters.

SIGNAL CHARACTERISTIC	OUTPUT PARAMETER
Localizer rf carrier frequency	Selected standard localizer ground station frequency
Rf carrier modulation	90-Hz/150-Hz AM composite audio signal
Amplitude (%) modulation	20.0% per tone, on beam center
DDM	0.000
U/L (150-Hz) or D/R (90-Hz) status indicators	U/L (150 Hz)

Adjustment of the rf carrier frequency and the rf output level is the same as described for the VOR mode of operation in paragraph 8.5, except that stepping rf carrier frequencies with modulation on will skip over adjacent VOR channel frequencies.

A 1020-Hz audio tone, which simulates an identification signal, can be added to the localizer rf output signal at 30-percent modulation by keyboard entry. Additionally a 30-Hz to 4-kHz auxiliary audio tone is available. (Entries to 10 Hz and up to 10 kHz are also allowed; however, operation is only specified over the 30-Hz to 4-kHz range.) The operator may add or remove the signal as required during receiver checks. The amplitude (%) modulation of the auxiliary audio is adjustable in 0.1-percent increments from 5.0 to 30.0 percent. The 1020-Hz ident tone amplitude (%) modulation, when selected, is fixed at 30.

The difference in depth of modulation (DDM) is selectable in standard preset DDM steps of 0.000, ±0.046, ±0.093, ±0.155, and ±0.200, or in 0.001 increments to ±0.400 through keyboard entry. The DDM can be slewed in either direction in ±0.001 increments. The selected DDM's are used to check receiver operation and accuracy. The amplitude (%) modulation of the 90/150-Hz tones in the LOC mode is variable from 5.0 to 40.0 percent in 0.1-percent increments to check receiver response. The % modulation can be varied only at beam center.

When the signal generator produces an up or left signal, the 150-Hz portion of the composite signal is predominant and when the signal generator produces a down or right signal, the 90-Hz portion of the composite signal is predominant. All DDM signals produced by the signal generator are up or left signals unless changed to a down or right signal through keyboard entry. The 90- and 150-Hz signals are balanced at 0.000 DDM and neither signal is predominant; however, the signal generator provides a U/L (150-Hz) indication that indicates the next DDM step will be in the up or left direction. The DDM cannot be changed to indicate D/R (90 Hz) at 0.000 DDM.

Either or both of the 90- and/or 150-Hz audio signals can be removed as required to perform receiver flag checks.

The phase angle between the 90- and 150-Hz tones is normally fixed at 0 degree. It may be varied to 60 degrees (referenced to the 150-Hz signal) via keyboard entry. The 90- and 150-Hz signal frequencies are adjustable ±5.0 percent. Adjustment of either causes a corresponding change in the other.

The signal generator can be returned to the preset condition using the STD key the same as described for the VOR mode in paragraph 8.5.

For detailed operating procedures and detailed information on the controls and indicators, refer to the operation section.

8.7 Glideslope (GS) Mode Operation

When a standard glideslope (GS) rf carrier frequency is initially selected, the signal generator automatically switches to the GS mode and to the GS mode preset condition. The rf output signal from the signal generator simulates a glideslope ground station signal and in the preset condition provides an audio modulated rf output signal with the following parameters.

SIGNAL CHARACTERISTIC	OUTPUT PARAMETER
Glideslope rf carrier frequency	Selected standard glideslope ground station frequency
Rf carrier modulation	90-Hz/150-Hz AM composite audio signal
Amplitude (%) modulation	40.0% per tone, on beam center
DDM	0.000
U/L (150-Hz) or D/R (90-Hz) status indicator	U/L (150 Hz)

The operation in the glideslope mode is the same as in the localizer mode described in paragraph 8.6, except DDM is selectable in standard preset steps of 0.000, ±0.045, ±0.091, ±0.175, and ±0.400; or in 0.001 increments to ±0.800 through keyboard entry; the DDM can be slewed in either direction in 0.002 increments; the percent modulation of the 90/150-Hz signals is variable from 10.0 to 80.0 percent; the percent modulation of the auxiliary audio may be varied 10 to 60 percent; no fixed-amplitude 1020-Hz ident tone is provided.

8.8 Marker Beacon (MB) Mode Operation

When the standard marker beacon rf carrier frequency of 75.000 MHz is initially selected, the signal generator automatically switches to the MB mode and to the MB mode preset condition. The rf output signal from the signal generator simulates a marker beacon ground station and in the preset condition provides an audio modulated, rf output signal with the following parameters.

SIGNAL CHARACTERISTIC	OUTPUT PARAMETER
Marker beacon rf carrier frequency	75.000 MHz
Rf carrier modulation	400-Hz AM audio signal (outer marker)
Amplitude (%) modulation	95.0%

The signal generator provides preset 400-Hz (outer marker), 1300-Hz (middle marker), and 3000-Hz (inner marker) audio modulation tones. Auxiliary tones from 100 to 4000 Hz are available. (Frequencies from 10 to 100 Hz and from 4 to 10 kHz are also allowed; however, operation is only specified over the 100- to 4000-Hz range.) The audio tones are selectable as required for testing, troubleshooting, and aligning a marker beacon receiver. Any tone may be removed if required.

The amplitude (%) modulation is variable from 15.0 to 97.0 percent for the preset and auxiliary tones. The preset and auxiliary tones are variable in 0.1-percent increments.

The signal generator is capable of producing rf frequencies from 74.6 to 75.4 MHz to provide simulation of interference-type signals.

The signal generator produces all the required marker beacon rf output signals required for testing a marker beacon receiver. For detailed operating procedures and detailed information on the controls and indicators, refer to the operation section.

8.9 VHF Communications (COMM) Mode Operation

When a standard vhf communication frequency is selected, the signal generator automatically switches to the COMM mode preset condition. The rf output signal from the signal generator provides an audio modulated rf output signal with the following parameters.

SIGNAL CHARACTERISTIC	OUTPUT PARAMETER
Communication rf carrier frequency	Selects standard vhf frequency (118.000 to 151.975 MHz)

SIGNAL CHARACTERISTIC	OUTPUT PARAMETER
Rf carrier modulation	1020-Hz audio signal
Amplitude (%) modulation	30.0%
Output level	-50 dB mW (If the output level is changed after initial power-on or after self-test, the level remains at the selected level.)

Caution

The 479S-6A does not provide reverse power protection. Do not key a communications transceiver when connected to the signal generator or extensive damage will result to the signal generator.

Rf carriers from 118.000 to 151.975 MHz can be selected in 25-kHz steps.

The rf carrier is variable up to ±1-channel spacing to check receiver selectivity. Using the slew keys, the carrier frequency can be varied in either direction at a fast or a slow rate depending on test requirements. Consecutive channel frequencies can be selected with a single keystroke by use of the RF FREQ key. Off-channel frequencies can be entered via the DATA ENTRY keyboard in 1-kHz increments.

The rf output level is adjustable from -6 to -120 dB mW to allow operator selection of the output level required to meet test requirements for frequency response. The output level can be increased or decreased in either 1- or 10-dB steps as required by the operator.

The audio tone may be switched from the preset 1020 Hz to an auxiliary signal of 30 Hz to 10 kHz. (Entries to 10 kHz are allowed, however, operation is only specified over the 30-Hz to 10-kHz range.) Initial selection of the auxiliary frequency function provides a tone of 1 kHz. The amplitude (%) modulation of the auxiliary signal is adjustable from 5.0 to 35.0 percent in 0.1-percent increments to check receiver response.

For detailed operating procedures and detailed information on the controls and indicators, refer to the operation section.

8.10 Store Recall Function (479S-6A VOR/ILS Signal Generators, -002 or -003 Status)

The 479S-6AVOR/ILS Signal Generators, -002 or -003 status, installed have all the basic 479S-6A features plus the additional capability of the operator programming up to 100 front panel setups. Refer to figure 2 for store/recall assembly A9 location and figure 3 for a block diagram. Once programmed into storage, the setups can be recalled upon command from the operator. Setups can be recalled and changed as desired. After a setup is placed in storage, power can be removed and the data will be retained indefinitely.

Selection of the store function causes store/recall assembly A9 to process data received from the microprocessor via the control bus, and to store it in the selected location. On a recall command, store/recall assembly A9 transfers the selected memory data back to the microprocessor, which in turn reprograms the signal generator as required.

For detailed operating procedures of the store/recall function, refer to the operation section.

8.11 Remote Bus Programming Function (479S-6A VOR/ILS Signal Genrators, -003 Status)

The 479S-6A VOR/ILS Signal Generators, -003 status, installed have all the basic 479S-6A features, the store/recall function, plus the capability of being remotely programmed. For ease of programming, the store/recall may be programmed first, either locally or remotely. Only the step numbers for the stored setups need to be transmitted on the remote bus, which will then program a complete front panel setup. Refer to figure 2 for IEEE-488/1978 interface assembly A10 location and figure 3 for a system block diagram.

IEEE-488/1978 interface assembly A10 connects the signal generator to the IEEE-488 bus. Subminiature rocker switches are used to preset a 5-bit address for the signal generator. The IEEE-488 interface circuitry is initialized during the CPU's power-up routine. Subsequently, when a command is received that agrees with the preselected address of the generator, a nonmaskable interrupt is generated by the IEEE-488 circuitry, requesting service from the CPU. The CPU then processes the remote computer command, either receiving setup instructions or replying with status information.

9. FUNCTIONAL THEORY OF OPERATION (Refer to figure 4.)

9.1 General

The functional theory of operation is a discussion of the 479S-6A VOR/ILS Signal Generator at the circuit card assembly level. This discussion provides assistance to the technician in understanding signal generator operation for maintenance purposes.

The signal generator consists of the front panel assembly A1, controller/audio assembly A2, rf modulator assembly A3, synthesizer assembly A4, power supply assembly A5, chassis assembly A6, and backplane assembly A7, which includes the remote tune circuits A8, store/recall assembly A9 (status -002 or -003), and IEEE 488/1975 program I/O AIO (status -003). Only the digitally controlled attenuator A6ATI portion of chassis assembly is discussed.

9.2 Microprocessor (CPU) Operation

9.2.1 General

The microprocessor (CPU), PROM, and RAM chips are contained on CPU assembly A2A1. The CPU controls all internal signal generator operations; it is interconnected with the front panel assembly A1, rf modulator assembly A3, TDM board A2A3, and backplane assembly A7 by a parallel control bus. The control bus is capable of handling 8-bit addresses, 8-bit data, and I/O read and write pulses. The 8-bit addresses and I/O read/write pulses are generated only in the CPU, while the 8-bit data can be generated by the CPU or, on request, obtained from A1A1, A2A3, A3A3, or A9 or A10 (-002 or -003 status units) depending on I/O port addressed.

The 8-bit address selects the correct I/O port. The I/O read pulse strobes data out of the port over the control bus to the CPU. The I/O write pulse strobes data from the CPU into the correct I/O port via the control/data bus.

9.2.2 Keyboard Scan

The CPU is strapped for one interrupt that occurs at nominal 4-millisecond intervals. At each of these nominal 4-millisecond intervals, addresses, data, and I/O write pulses are supplied over the control bus to A1. The I/O port on A1 supplies the data to a keyboard matrix and the keyboard is scanned to determine if any keys have been pressed. If, during the scan, the scan detects a pressed key, data is returned via the I/O port on A1. On request from the CPU, the data is returned to the CPU over the control bus. The CPU stores the returned data until the same data is returned 12 consecutive times. After the 12th time, the CPU recognizes the keyboard entry as valid, and processes the data. Twelve consecutive data returns from the keyboard are required to ensure that the entry is valid and not an entry due to key bounce. Since the keyboard is in a matrix, returned data denotes the key position in the matrix.

9.2.3 Keyboard DATA ENTRY Keys

When making rf frequency, VOR radial, DDM, and percent modulation entries through the DATA ENTRY keys, after each numeral is recognized by the CPU, the information is stored until the DATA ENTRY — ENTER key is pressed.

When the ENTER key data is recognized by the CPU, the stored numeral information is processed. If a mistake is made during entry of the information on the numeric keys, pressing the DATA ENTRY — CLEAR key removes the stored information from the CPU. The CLEAR key also removes information from the CPU when an invalid entry is made, producing a blinking display.

9.2.4 Loop Operation

During periods between interrupts, if all key activity is finished, the CPU returns to its normal routine. In normal routine, the CPU monitors the keyboard to determine if a keystroke has been made, requests the frequency count from A3 to ensure that the frequency indicated on the display is accurate, requests the status of synthesizer phase lock from A3 to ensure that selected synthesizer rf output frequency remains phase locked to the reference frequency, and requests rf level calibration status from A3 to ensure that the rf level is within specified limits. If any of the information is not available when requested, the CPU proceeds through the loop and the information is obtained during the next loop.

9.3 Front Panel Assembly A1 Operation

9.3.1 General

The front panel assembly provides operator interface with the signal generator. A keyboard that is part of keyboard driver board A1A1 allows the operator to select the required signal generator outputs for testing, troubleshooting, and/or aligning and adjusting the unit under test.

The digital displays and LED indicators on display board A1A2, plus lighted keys on A1A1, provide the

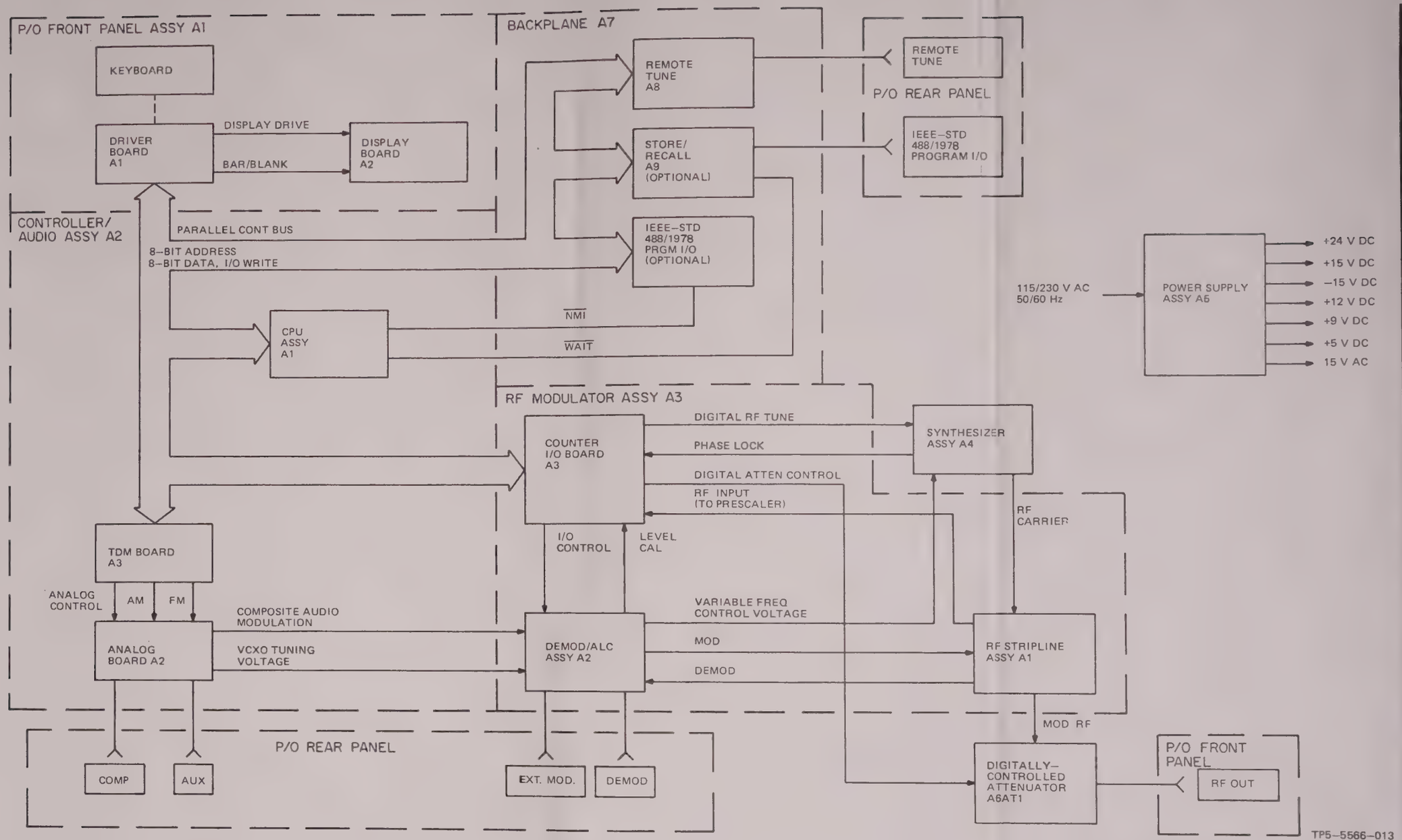

479S-6A VOR/ILS Signal Generator, Functional Diagram
Figure 4

operator with a readout of the output signal parameters.

9.3.2 Keyboard Driver Board A1A1

Keyboard driver board A1A1 contains the I/O ports, keyboard, display driver circuits, bar/blanking circuits, and key light driver circuits. The I/O ports are connected to the parallel control bus and receive and transmit all information via the control bus. When the I/O port is addressed and an I/O write pulse occurs, the data at the input to the I/O port is supplied to the correct circuit on A1A1. When the input is for a keyboard scan, which occurs at nominal 4-millisecond intervals, the data is supplied to the keyboard switching matrix circuits. If a key is pressed, data is returned to the I/O port and when the CPU transmits the correct address and an I/O read pulse, the data is transmitted over the control bus to the CPU.

When CPU data at the A1A1 I/O port is to light a display, the data is latched in display driver circuits. The driver circuits produce display driver signals that are supplied to A1A2.

When the CPU data at the A1A1 I/O port is to either bar or blank a digital display, the data is supplied to the bar/blank circuit that produces the correct bar or blank signals. The bar/blank signals are supplied to A1A2.

When CPU data at the A1A1 I/O port is to light a specific keyboard key, the data is latched in the key light driver circuit. The driver circuit provides a lamp drive signal to a lamp located in the key, under the key cap.

9.3.3 Display Board A1A2 Operation

Display board A1A2 contains 7-segment digital displays and LED indicators. The digital displays and LED indicators indicate rf output signal parameters. All displays and indicators are driven by signals from A1A1.

9.4 Audio Modulation Generator Operation

The audio modulation generator consists of TDM board A2A3 and analog board A2A2. The modulation generator produces audio signals that are used to modulate the selected rf carrier signal. The modulation signal requirements depend on the selected rf frequency (mode of operation).

When an rf carrier frequency is selected, the CPU supplies data over the control bus to the I/O ports on A2A3. The data programs the modulation generator to generate the correct audio signals. All internal audio modulation signals and analog control signals are generated on A2A3 and supplied to A2A2.

In the VOR mode, A2A3 generates 30-Hz variable AM and 9960-Hz FM (30-Hz reference) signals that are both supplied to A2A2. The phase relationship between the 30-Hz variable and 30-Hz reference signals determine the VOR radial. TDM board A2A3 generates VOR analog control signals that are supplied to A2A2. Analog board A2A2 filters the audio modulation signals and combines the 30-Hz AM and 9960-Hz FM signals to produce a composite audio modulation signal that is supplied to demodulator/ALC assembly A3A2.

Phase information relating to the 30-Hz variable and 30-Hz reference signals is read back to the CPU by TDM board A2A3 when requested by the CPU. This phase information is transmitted to the CPU via the control bus and is used to generate the VOR radial displayed on the front panel.

In either localizer or glideslope mode, TDM board A2A3 generates 90- and 150-Hz AM signals. Both signals are supplied to A2A2 with a localizer or glideslope mode analog control signal. Analog board assembly A2A2 filters the 90- and 150-Hz AM signals to produce the composite audio modulation signal that is supplied to A3A2.

To change DDM, the CPU reprograms TDM board assembly A2A3 to modify as required the amplitudes of the 90- and 150-Hz tones.

In marker beacon mode, TDM board A2A3 generates one of three available audio modulation signals, depending on keyboard selection and subsequent data from the CPU. When the outer marker tone is selected, A2A3 generates a 400-Hz audio tone; when the middle marker tone is selected, A2A3 generates a 1300-Hz audio tone; and when the inner marker tone is selected, A2A3 generates a 3000-Hz audio tone. A marker beacon analog control signal is produced on A2A3 and supplied to A2A2. Analog board A2A2 filters the audio tone and supplies the tone to A3A2.

In VOR and localizer modes, a 1020-Hz audio tone also can be added to the composite audio modulation signal. The 1020-Hz audio tone simulates an identification signal. The 1020-Hz signal is combined with the other two modulation signals on A2A2.

In VOR mode, the FM signal can be removed from the standard 9960-Hz FM tone by depressing the 9960-Hz key.

Analog board A2A2 also supplies the composite modulation signal to a COMP connector on the rear panel and a 30-Hz reference signal (VOR mode only) to an AUX connector on the rear panel.

9.5 RF Section Operation

9.5.1 General

The rf section consists of rf modulator assembly A3, synthesizer assembly A4, and digitally-controlled attenuator A6AT1. The rf modulator assembly consists of rf strip line assembly A3A1, demodulator/ALC assembly A3A2, and counter - I/O board A3A3. The rf section generates selected rf carrier signal, modulates the carrier signal with the audio modulation signal, and adjusts rf output level. The modulated rf signal is applied from the digitally-controlled attenuator to the RF OUT connector on the front panel. In addition, an external modulation signal can be inserted through the rear panel connector into demodulator/ALC assembly A3A2 in place of the composite audio modulation signal.

Synthesizer assembly A4 generates the rf carrier signal at the frequency specified by the rf tune signal from A3A3. The synthesizer employs a phase-lock loop to provide a stable rf output frequency. A variable oscillator in the synthesizer allows frequency slewing when requested by keyboard entries.

The rf output from A4 is supplied to rf strip line assembly A3A1. The audio modulation signal from demodulator/ALC assembly A3A2 is also supplied to A3A1, and is used to modulate the rf carrier. The modulated rf signal is supplied to the digitally controlled attenuator, which is set to the correct attenuation for the output level selected.

Counter-I/O board A3A3 contains I/O ports that connect the rf section to the control bus. Board A3A3 also contains an rf frequency counter that provides rf frequency information to the CPU to be displayed on the front panel.

9.5.2 RF Frequency Selection

The CPU transmits rf frequency control data over the control bus to I/O ports on counter-I/O board A3A3. Counter-I/O board A3A3 routes the control bus data to synthesizer assembly A4.

The bcd rf tune signal tunes A4 to the selected rf carrier frequency. Synthesizer assembly A4 generates the selected rf carrier frequency and supplies the signal to rf strip line assembly A3A1.

When the sampled rf carrier frequency is phase-locked to a 25-kHz loop-lock frequency, a phase-lock status signal is supplied to A3A3.

The CPU also transmits data over the control bus to the I/O ports on A3A3, indicating the mode selected. Counter-I/O board A3A3 converts mode data into I/O control signals that are supplied to demodulator/ALC assembly A3A2. The I/O control signals adjust audio modulation level from A2A2 to the correct level to provide a standard percent of modulation for each mode. Percent modulation values other than standard are obtained by adjustment of the modulation signals in the audio modulation generator circuits. The level of the modulation signal is checked and automatically adjusted on A3A2 and is then supplied to A3A1. The external modulation signal is not automatically checked and adjusted for correct modulation levels. These levels must be calculated and the external modulation source must be adjusted to provide correct modulation levels. (Refer to the operation section for calculation and adjustment of correct external modulation signal levels.)

The composite audio modulation is combined with the rf carrier signal on A3A1 to produce a modulated rf signal that is supplied through the digitally controlled attenuator to the RF OUT connector on the front panel. The digitally controlled attenuator sets the rf output level.

The CPU also transmits data over the control bus to the I/O ports on A3A3 to select the desired rf output level. Counter-I/O board A3A3 routes control bus data to a digitally controlled attenuator. The binary control signal sets the attenuator to the correct level required to produce the selected rf output level at the RF OUT connector. When microvolt readings are being displayed on the RF LEVEL display, an additional 6-dB attenuation is inserted, making the signal output at the RF OUT connector one-half of the displayed RF LEVEL value. This results in an output which is "hard" microvolts, without the use of an external 6-dB pad. When the rf output is being displayed in dB mW, the extra 6-dB attenuation is removed and the rf output level at the RF OUT connector is absolute (the level indicated in the RF LEVEL display).

The rf strip line assembly produces an rf signal that is the rf carrier frequency; it also produces a demodulator signal that is the modulation signal with the rf carrier removed. The rf signal is supplied to the frequency counter on A3A3, and the demodulator signal is supplied to A3A2.

Counter-I/O board A3A3 counts the rf signal to determine the frequency of the output signal and supplies the count to the rf counter output ports. When the CPU requests the frequency count, the information is supplied from the I/O port over the control bus to the CPU. The CPU uses the frequency count to supply frequency information over the control bus to A1 for display in the FREQUENCY display.

When requested by the CPU, the phase-lock information is also supplied from an I/O port on A3A3 over the control bus to the CPU. The CPU data uses the information to supply data over the control bus to A1 for control of RF STATUS — PH LOCK indicator.

The demodulator signal supplied to A3A2 is used to level the rf carrier and to linearize the modulation signal supplied to A3A1. The demodulation signal is also supplied to the DEMOD connector on the rear panel. When the rf output is within the specified limits, a logic 1 level calibration signal is supplied to an I/O port on A3A3. The level calibration status information is continuously sampled and returned over the control bus to the CPU. The CPU uses the level calibration information to supply data over the control bus to A1 for RF STATUS — LEVEL CAL indicator.

9.6 Power Supply Assembly A5 Operation

The signal generator can be operated on either 115 volts or 230 volts 50/60 Hz. The generator is shipped wired for 115-volt operation. If 230-volt operation is required, refer to the maintenance section for rewiring information.

The power supply assembly produces +5, +9, +12, +15, -15, and +24 V dc and 15 V ac, for signal generator operation.

9.7 Remote Tune Board A8

Remote tune board A8 provides 2-of-5 tuning that meets ARINC 410. Address and data information is used to turn on relays that provide grounds and supply tuning information to the radio under test.

Information is also provided to generate the following control signals: mode select A, NAV disable, LOC/GS energize, mode select B, COM disable, and timing trigger.

9.8 Store/Recall Board A9

CPU address and data bus information, along with I/O read and write signals, are provided to store/recall board A9 to allow storage of signal generator setup's in memory. These setup's can then be recalled at any time and used to test a receiver.

Equipment is configured as desired and a 2-digit memory address is entered on data entry keys.

9.9 IEEE 488/1978 Interface Board A10

IEEE interface board A10 provides the capability for control of the signal generator to originate outside the signal generator. This board conforms to IEEE standard 488-1978.

10. DETAILED THEORY OF OPERATION

10.1 Introduction

The detailed theory of operation is a discussion of the 479S-6A VOR/ILS Signal Generator at the functional circuit level on each circuit card or module assembly. This discussion provides assistance to the technician in understanding signal generator operation for maintenance and troubleshooting purposes.

10.2 Front Panel Assembly A1

10.2.1 General

Front panel assembly A1 provides operator interface with the signal generator. The front panel keyboard allows the operator to select the test signal parameters required to test, troubleshoot, and/or align VOR, localizer, glideslope, and marker beacon receivers. The front panel display indicates the signal generator rf output signal parameters and characteristics. Front panel assembly A1 consists of keyboard/driver board A1A1 and display board A1A2. The keyboard is contained on A1A1; the front panel display on A1A2.

10.2.2 Overall Operation (Refer to figure 5.)

Controller/audio assembly A2 contains a microprocessor that transmits 8-bit addresses, 8-bit data, and I/O read/write pulses over a parallel 18-line control bus to the internal circuits of the signal generator, including keyboard driver board A1A1. Addresses and I/O read/write pulses determine operational functions to be performed, and the data bits provide the intelligence.

Keyboard switches contained on A1A1 are connected in a switching matrix that uses the inputs to the

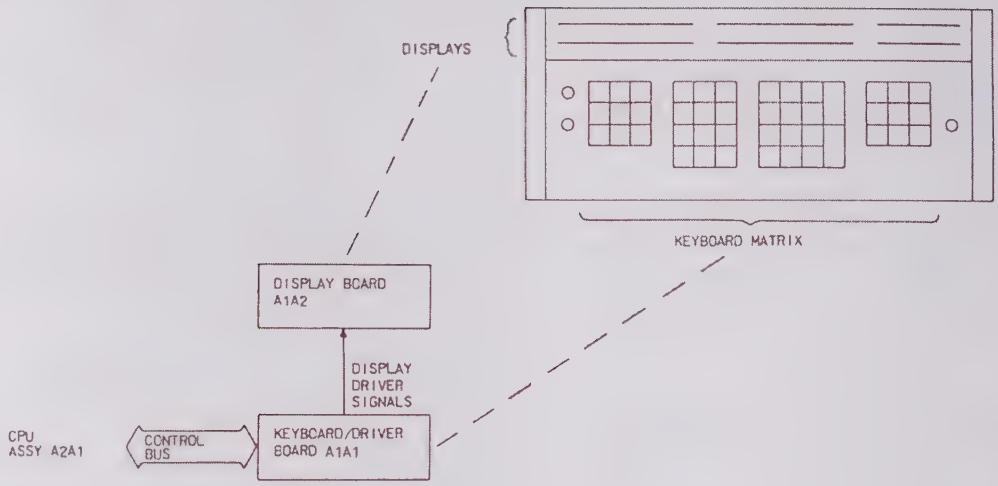

Front Panel Assembly A1, Overall Operation
Figure 5

matrix and the switch position in the matrix to determine the operational function or signal characteristic selected by the operator. The microprocessor on A2 produces addresses, data, and I/O read/write pulses which occur at nominal 4-millisecond intervals, causing the switching matrix to be scanned. The scan determines whether the operator has made an entry on the keyboard. Addresses, data, and I/O read/write pulse from A2 are transmitted over the parallel control bus to A1A1. If no keyboard entries have been made, the keyboard switching matrix produces no output during the scan and the signal generator remains in the last selected test condition. If an entry has been made, the matrix produces a data bit output during the scan and the data bit is returned to the microprocessor over the control bus. The data bit indicates the selected function or test characteristic.

Display driver signals are produced on A1A1 from information received from A2 over the parallel control bus. Driver signals are applied to display board A1A2 and light the applicable indicators for the information received from A2. The display provides a visual indication of signal generator output signal parameters and characteristics.

10.2.3 Keyboard/Driver Board A1A1

a. Overall Operation (Refer to figure 6.)

The I/O read, I/O write, and address bits A0 through A7 from the parallel address bus and CPU assembly A2A1 are supplied to the address decoder circuit. The address decoder circuit decodes the hexadecimal address information to determine A1A1 and A1A2 circuit functions. Refer to table 3 for hexadecimal-to-decimal conversion.

Decoded addresses OUT 40 through OUT 44 and OUT 4E are supplied to the RDL/DDM/MOD display driver circuit. Decoded addresses OUT 45 through OUT 4A and OUT 4F are supplied to the FREQUENCY display driver circuit. Decoded addresses OUT 4B through OUT 4D and OUT 50 are supplied to the RF LEVEL display driver circuit. Decoded address OUT 51 is supplied to the bar/blank circuit and OUT 52 through OUT 55 are supplied to key indicator circuits. All of these addresses are supplied to their applicable circuits when an I/O write pulse occurs.

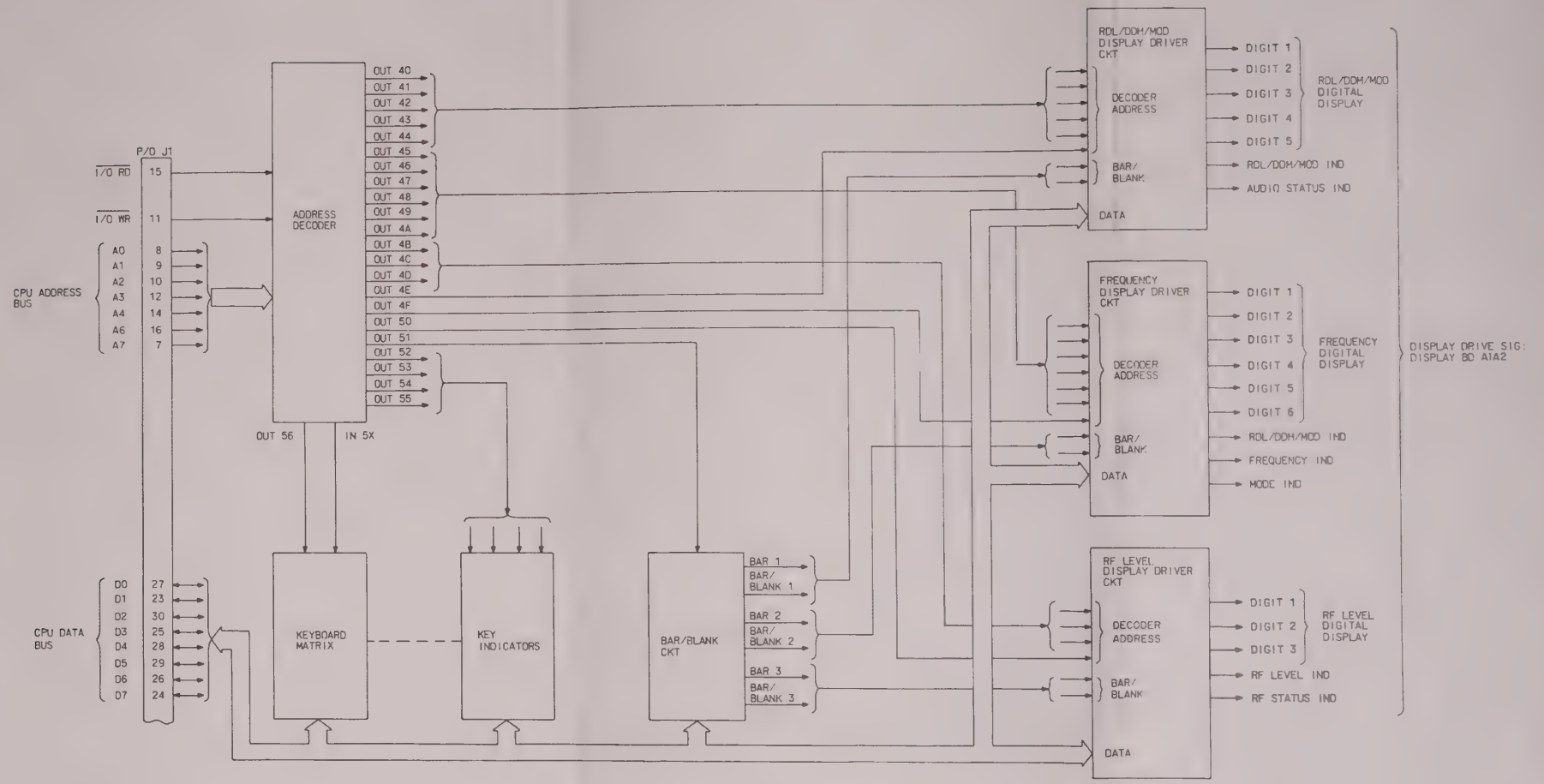

TP5-4891-014

Keyboard/Driver Board A1A1, Functional Diagram
Figure 6

Table 3. Decimal to Hexadecimal Conversion.

NUMBER SYSTEM	CODE															
Decimal	0	1	2	3	4	5	6	7	8	9	10	11	12	13	14	15
Hexadecimal	0	1	2	3	4	5	6	7	8	9	A	B	C	D	E	F

Decoded address OUT 56 and IN 5X are supplied to the keyboard matrix circuit. The OUT 56 address occurs when an I/O write pulse occurs and the IN 5X address occurs when an I/O read pulse occurs.

Data bits DB0 through DB7 from the parallel data bus and CPU assembly A2A1 are supplied to the keyboard matrix, key indicator, bar/blank, RDL/DDM/MOD display driver, FREQUENCY display driver, and RF LEVEL display driver circuits and contain the intelligence for circuit operation.

Every 4 milliseconds, the data bits and decoded addresses supplied to the keyboard matrix cause a complete keyboard scan to determine if any entries have occurred. When an entry is made on the keyboard, the IN 5X address causes a data bit to be returned over the parallel data bus to CPU assembly A2A1. The data bit indicates the matrix position of the key and identifies the key function. When the entry is made on a key that lights, the CPU supplies data bits and addresses back to A1A1. The I/O write pulse and the decoded address cause the key indicator circuit to accept the data bits, and the key indicator produces a signal that lights the key, indicating that the key function is selected.

Data bits from the parallel data bus and the CPU are supplied to the bar/blank circuit. When the I/O write pulse occurs with a decoded address of OUT 51, the bar/blank circuit accepts the data bits. The data bits cause the circuit to produce either bar or blank signals that are supplied to the RDL/DDM/MOD, FREQUENCY, and RF LEVEL displays. Blank 1, 2, and 3 signals blank the RDL/DDM/MOD, FREQUENCY, and RF LEVEL displays respectively. Bar 1 and 2 signals cause the RDL/DDM/MOD and FREQUENCY displays, respectively, to display dashes. The bar 3 signal causes the RF LEVEL display to display OFF. Data bits determine the specific signal produced by the bar/blank circuit.

Data bits from the parallel data bus and the CPU, and the OUT 40 through OUT 45 and the OUT 4E decoded addresses from the address decoder circuit, are supplied to the RDL/DDM/MOD display driver circuit and determine the information to be supplied to the display circuit board. The display drive signals from the RDL/DDM/MOD display driver circuit are supplied to the RDL/DDM/MOD digital display and indicators, and to the AUDIO STATUS indicators.

FREQUENCY display driver circuit operation is the same as described for the RDL/DDM/MOD display driver circuit, except that decoded addresses OUT 45 through OUT 4A and OUT 4F are used to latch the data bit input and the circuit provides FREQUENCY digital display and indicator drive signals, RDL/DDM/MOD display indicator drive signals, and MODE display indicator drive signals.

RF LEVEL display driver circuit operation is the same as described for the RDL/DDM/MOD display driver circuit, except that decoded addresses OUT 4B, OUT 4C, OUT 4D, and OUT 50 are used to latch the data bit input, and the circuit provides RF LEVEL digital display and indicator and RF STATUS indicator drive signals.

b. Address Decoder Circuit Operation (Refer to figure 7.)

Address bits A0 through A7 are supplied to connector J1 from CPU assembly A2A1. Address bits A0, A1, A2, and A6 are supplied to decoders U5, U19, and U47. Address bit A6 is also supplied to NAND gate U1C. Address bit A3 is supplied to NAND gate U28B, and through inverter U1B, to NAND gates U28A and U28C. Address bit U4 is applied to NAND gate U28A and, through inverter U1D, to U28B and U28C. Address bit A7 is applied through inverter U1A to U28A, U28B, and U28C. Address bit A5 is not used in the decoder circuit. When the hexadecimal address from A2A1 is 40 to 47, U28C produces a logic 0 that enables decoder

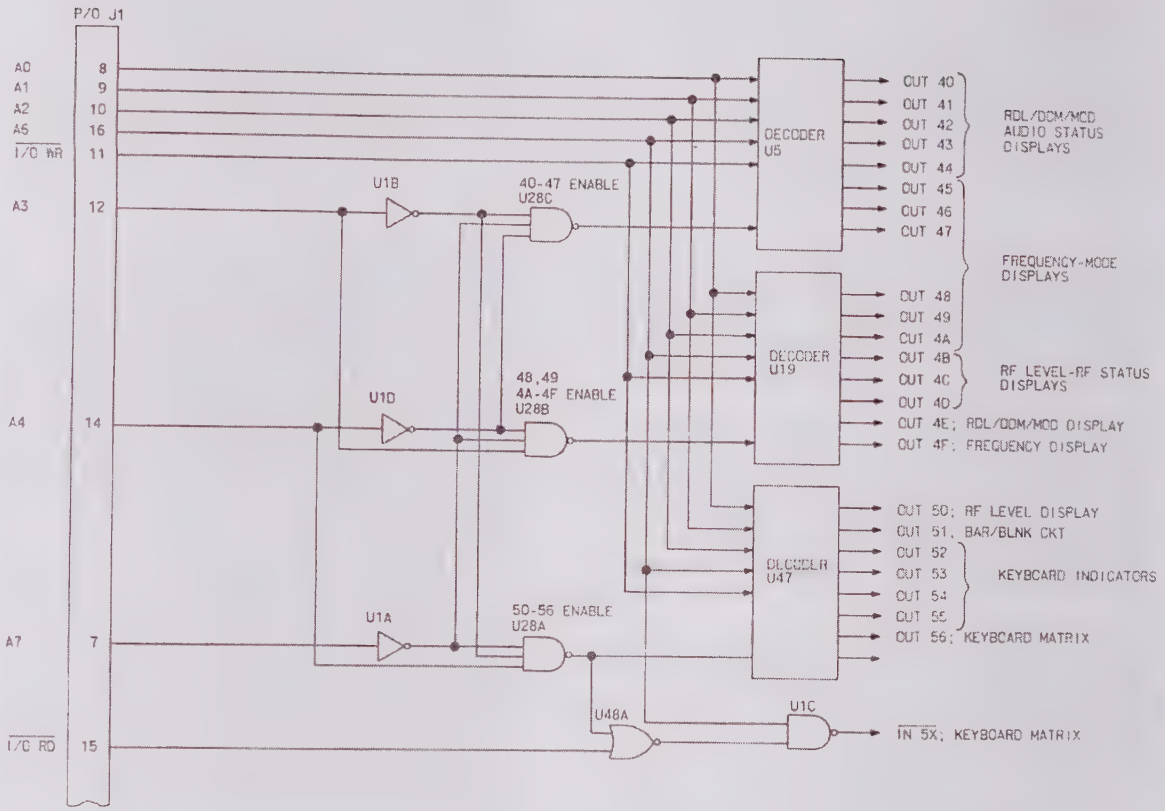

DECODE DATA

ADDRESS IN								IO WR	DECODER OUTPUT LOGIC 1
A0	A1	A2	A3	A4	A5	A6	A7		
0	0	0	0	0	0	1	0	↓	OUT 40
1	0	0	0	0	0	1	0	↓	OUT 41
0	1	0	0	0	0	1	0	↓	OUT 42
1	1	0	0	0	0	1	0	↓	OUT 43
0	0	1	0	0	0	1	0	↓	OUT 44
1	0	1	0	0	0	1	0	↓	OUT 45
0	1	1	0	0	0	1	0	↓	OUT 46
1	1	1	0	0	0	1	0	↓	OUT 47
0	0	0	1	0	0	1	0	↓	OUT 48
1	0	0	1	0	0	1	0	↓	OUT 49
0	1	0	1	0	0	1	0	↓	OUT 4A
1	1	0	1	0	0	1	0	↓	OUT 4B
0	0	1	1	0	0	1	0	↓	OUT 4C
1	0	1	1	0	0	1	0	↓	OUT 4D
0	1	1	1	0	0	1	0	↓	OUT 4E
1	1	1	1	0	0	1	0	↓	OUT 4F
0	0	0	0	1	0	1	0	↓	OUT 50
1	0	0	0	1	0	1	0	↓	OUT 51
0	1	0	0	1	0	1	0	↓	OUT 52
1	1	0	0	1	0	1	0	↓	OUT 53
0	0	1	0	1	0	1	0	↓	OUT 54
1	0	1	0	1	0	1	0	↓	OUT 55
0	1	1	0	1	0	1	0	↓	OUT 56

TP5-4866-014

Address Decoder Circuit
Figure 7

U5. When the hexadecimal address is 48, 49, or 4A through 4F, U28B enables decoder U19. When the hexadecimal address is between 50 and 56, U28C enables decoder U47 and NOR gate U48A. Refer to figure 7 for an address decode truth table.

The I/O write (F) pulse from CPU assembly A2A1 is applied through J1 to decoders U5, U19, and U47. When the address is between 40 and 47, decoder U5 is enabled and the I/O write (F) pulse strobes the decoder, which produces a logic 0 decoded address output pulse. The decoded address label is the same number as the hexadecimal code on the parallel address bus. For example, if the binary/hexadecimal code on the address bus is 40, the decoded address label is OUT 40.

Decoders U19 and U47 operate in the same manner as U5, except that U19 is enabled by U28B when the parallel address on the bus is between 48 and 4F, and U47 is enabled by U28A when the address on the parallel bus is between 50 and 56.

Figure 7 contains a chart showing the parallel address bus inputs and the decoded address output when an I/O write (F) pulse occurs. Destinations of the decoded addresses are also shown.

The I/O read (F) pulse from CPU A2A1 is applied through J1 to U48A. When the address is between 50 and 57 and an I/O read (F) pulse occurs, U48A supplies a logic 1 to U1C that is ANDed with address bit A6, causing U21C to supply a logic 0 IN 5X signal to the keyboard matrix input port.

c. Keyboard Matrix Circuit (Refer to figure 8.)

Data bits from the parallel data bus and CPU assembly A2A1 are applied to connector J1. Data bits DB6 and DB7 are applied from J1 directly to keyboard scan latch U62, U64. Data bits DB0 through DB5 are applied through buffer U63 to the keyboard scan latch.

During the keyboard scan that occurs at 4-millisecond intervals, each data bit is a logic 0 in sequential order starting with DB0. When each data bit is a logic 0, all other data bits are a logic 1. Decoded address OUT 56 from the address decoder circuit enables the keyboard scan latch, and the logic 0 data bit signal is applied to each row of the keyboard matrix sequentially. When a key is pressed, the logic 0 from the keyboard scan latch is supplied through the closed key to keyboard read gate U66, U67. Location of the key in the matrix determines the data bit that is a logic 0 when the switch is closed. Refer to figure 8 for a table of scan data bits supplied to the keyboard matrix and the data bit out for each key closure.

When the address decoder supplies an IN 5X (F) signal to the keyboard read gate, the gate applies data bit pattern to connector J1 and, through the data bus, to CPU assembly A2A1.

d. Keyboard Indicator Circuit (Refer to figure 9.)

Data bits DB0 through DB5 from the parallel data bus and CPU assembly A2A1 are applied through connector J1 and buffer U63 to TONE SELECT key indicator latch no 1 U56, TONE SELECT key indicator latch no 2 U58, FUNCTION/CONTROL key indicator latch U60, and RF SELECT key indicator latch U65. The address decoder circuit supplies the decoded port address OUT 52 to U56, OUT 53 to U58, OUT 54 to U60, and OUT 55 to U65. When the decoded port address strobes the latch, the data bits at the latch input are latched and a logic 1 is applied through the applicable inverting lamp driver to the key lamp. The lamp driver supplies a ground to the lamp causing the lamp to light, indicating that the key function is selected. Refer to figure 9 for a chart containing keyboard indicator operational data.

e. Bar/Blank Circuit (Refer to figure 10.)

Data bits DB0 through DB5 from the parallel data bus and CPU assembly A2A1 are applied through connector J1 and buffer U63 to bar/blank latch U26. Decoded address OUT 51 from the port address decoder circuit is supplied to U26. When the decoded address strobes U26, the parallel data bits at the input are latched in U26.

When DB5 is a logic 1, a bar 1 logic 1 is applied through buffer U27B, inverters U32A, U32F, U34A, U34E, and U34F, and connector J2 to the g segments of the RDL/DDM/MOD display on A1A2. When DB4 is a logic 1, a bar 2 logic 1 is applied through buffer U27C, inverters U39A, U39F, U42A, U42F, U45A, and U45F, and connector J2 to the g segments of the FREQUENCY display on A1A2. When DB3 is a logic 1, a bar 3 logic 1 is applied through buffer U27A, inverters U49, U52, and U54, and connector J2 to the appropriate segments of the RF LEVEL display on A2A1. The bar 1, bar 2, and bar 3 signals are also supplied to OR gates U55C, U55B, and U55A, respectively, causing the display decoders to blank all segments.

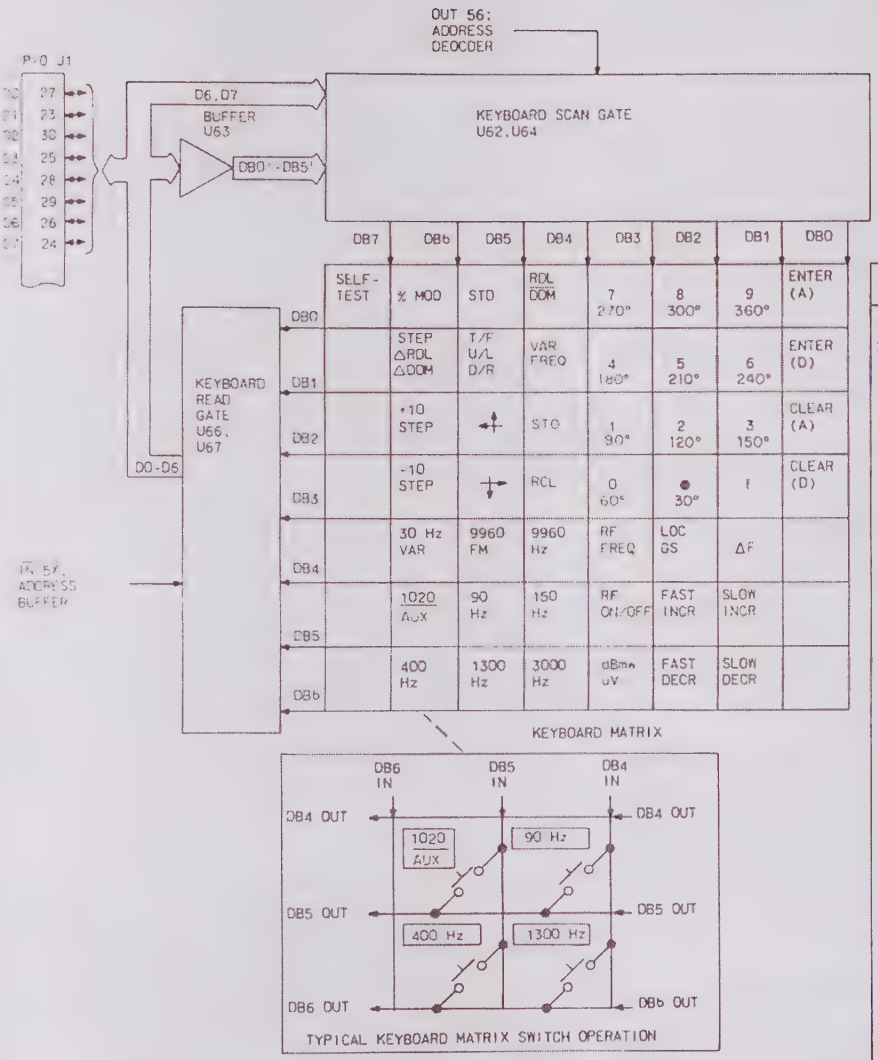

KEYBOARD MATRIX KEY	DATA BIT IN	DATA BIT OUT
SELF TEST	7	0
% MOD	6	0
STEP/ΔRDL/ΔDDM	6	1
+10 STEP	6	2
-10 STEP	6	3
30 Hz VAR	6	4
1020 AUX	6	5
400 Hz	6	6
STD	5	0
T/F; U/L, D/R	5	1
✦	5	2
✦	5	3
9960 FM	5	4
90 Hz	5	5
1300 Hz	5	6
RDL/DDM	4	0
VAR FREQ	4	1
STO	4	2
RCL	4	3
9960 Hz	4	4
150 Hz	4	5
3000 Hz	4	6
7/270°	3	0
4/180°	3	1
1/90°	3	2
0/60°	3	3
RF FREQ	3	4
RF ON/OFF	3	5
dBmW/μV	3	6
8/300°	2	0
5/210°	2	1
2/120°	2	2
•/30°	2	3
LOC/GS	2	4
FAST INCR	2	5
FAST DECR	2	6
9/330°	1	0
6/240°	1	1
3/150°	1	2
!	1	3
ΔF	1	4
SLOW INCR	1	5
SLOW DECR	1	6
ENTER (A)	0	0
ENTER (D)	0	1
CLEAR (A)	0	2
CLEAR (D)	0	3

TP5-5567-014

Keyboard Operation
Figure 8

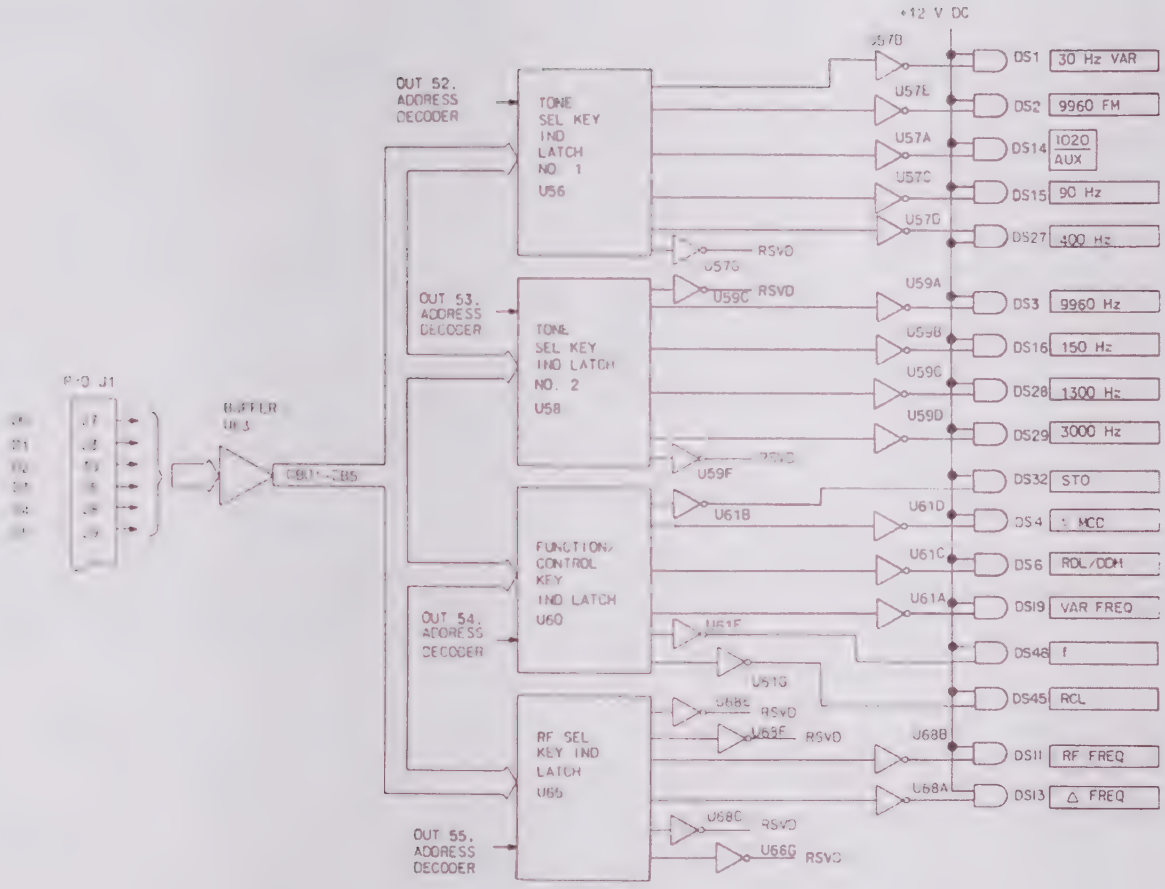

DATA BIT INPUT						INDICATOR LIT							
						DCD ADRS OUT 52		DCD ADRS OUT 53		DCD ADRS OUT 54		DCD ADRS OUT 55	
D0	D1	D2	D3	D4	D5	DES	KEY	DES	KEY	DES	KEY	DES	KEY
1	0	0	0	0	0	DS27	400 Hz	DS28	1300 Hz	DS32	STO	N/C	(RSVD)
0	1	0	0	0	0	DS15	90 Hz	N/C	(RSVD)	DS4	% MOD	N/C	(RSVD)
0	0	1	0	0	0	DS1	30 Hz VAR	N/C	(RSVD)	DS6	RDL/DDM	DS11	RF FREQ
0	0	0	1	0	0	DS14	1020/AUX	DS29	3000 Hz	DS19	VAR FREQ	DS13	Δ F
0	0	0	0	1	0	N/C	(RSVD)	DS3	9960 Hz	DS45	RCL	N/C	(RSVD)
0	0	0	0	0	1	DS2	9960 FM	DS16	150 Hz	DS48	f	N/C	(RSVD)

TPS-5565-014

Key Indicator Operation
Figure 9

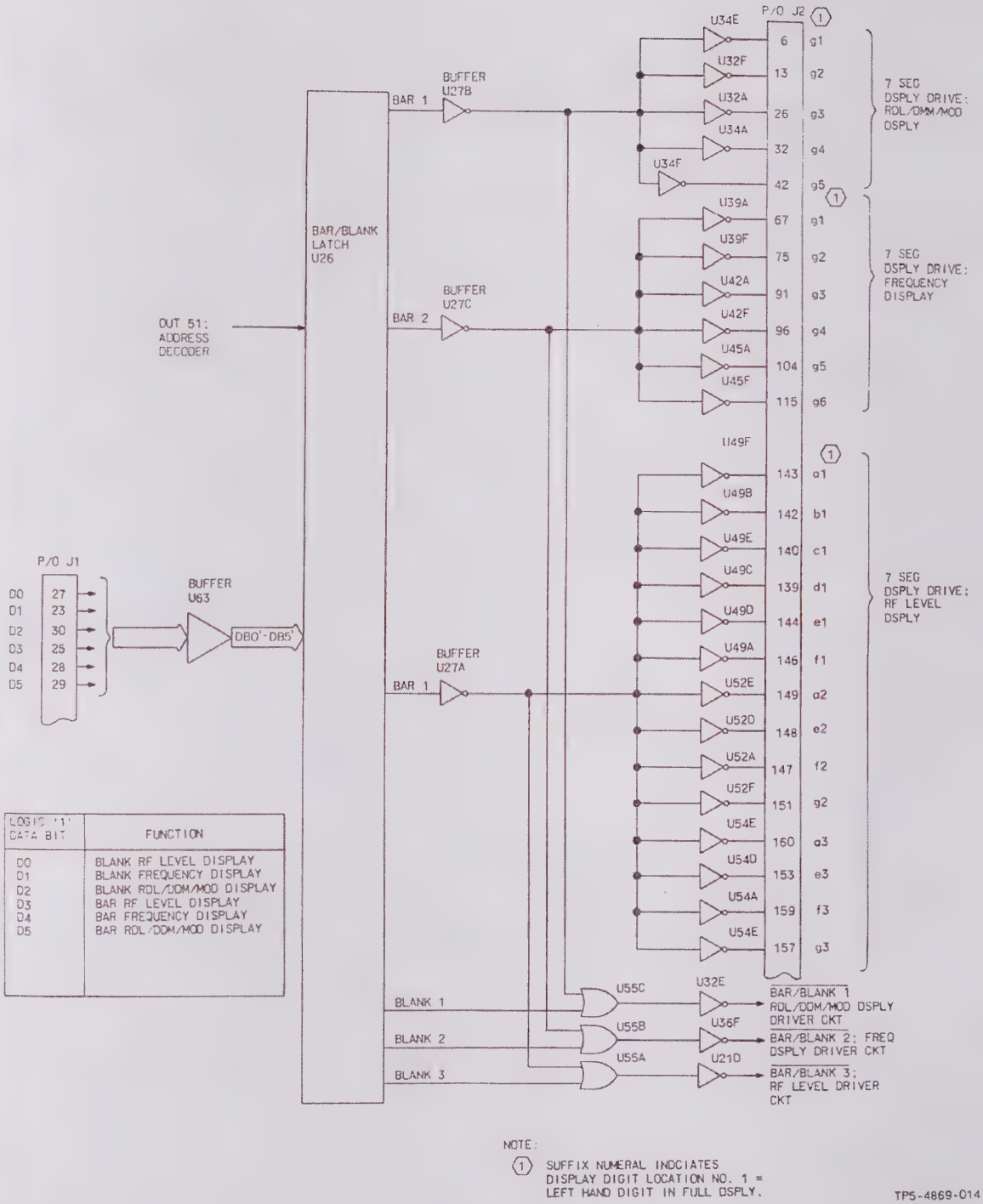

LOGIC '1' DATA BIT	FUNCTION
D0	BLANK RF LEVEL DISPLAY
D1	BLANK FREQUENCY DISPLAY
D2	BLANK RDL/DDM/MOD DISPLAY
D3	BAR RF LEVEL DISPLAY
D4	BAR FREQUENCY DISPLAY
D5	BAR RDL/DDM/MOD DISPLAY

NOTE:
(1) SUFFIX NUMERAL INDICATES DISPLAY DIGIT LOCATION NO. 1 = LEFT HAND DIGIT IN FULL DSPLY.

TP5-4869-014

Bar/Blank Circuit
Figure 10

When the bar 1 signal is a logic 1, logic 1 is applied through U55C and inverter U32E to the RDL/DDM/MOD display driver circuit and causes the circuit latch to remove all outputs (blank). The bar logic 1 is then applied through an inverting driver to the display, causing the digital display to produce a bar for each digit. The bar 2 signal operates in the same manner for the FREQUENCY display using U55B and inverter U36F. The bar 3 signal operates in the same manner as the bar 1 signal using U55A and inverter U21D, except the RF LEVEL display indicates OFF.

When DB2 is a logic 1, a blank 1 signal is applied through U55C and U32E to the RDL/DDM/MOD display circuit and all latch outputs are removed, causing the corresponding digital display on A2A1 to be blank. When DB1 is a logic 1, a blank 2 signal is applied through U55B and U36F to the FREQUENCY display and blanks the corresponding digital display. When DB0 is a logic 1, a blank 3 signal is applied through U55A and U21D to the RF LEVEL display on A1A2, and blanks the corresponding digital display.

f. Display Driver Circuit

Figure 11 shows the RDL/DDM/MOD display digit no 1 circuit as a typical display circuit that is used for discussion purposes. All display driver circuits for the RDL/DDM/MOD, FREQUENCY, and RF GAIN displays are shown on figures 12 through 14.

Data bits DB0 through DB5 from the parallel data bus and CPU assembly A2A1 are applied through connector J1 and buffer U63 to RDL/DDM/MOD digit no 1 latch U2. When decoded address OUT 40 from the address decoder circuit is supplied to the latch, the data bits at the input to U2 are latched.

Data bits DB0 through DB3 determine the numeral that is to be displayed, and data bits DB4 and DB5 determine the indicators to be lit. Latch U2 supplies data bits DB0 through DB3, which comprise the bcd number to be displayed to bcd-to-7 segment driver U29. Data bit DB4 is applied from the latch through driver U7D and connector J2 to the RDL/DDM/MOD display TO indicator. Data bit DB5 is applied from the latch through driver U7B and connector J2 to the AUDIO STATUS display VAR FREQ indicator.

The bcd-to-7 segment driver U29 converts the bcd input to the 7-segment outputs required to drive the digital display for digit no 1 of the RDL/DDM/MOD display. The seven outputs from the driver are applied through J2 to the 7-segment digital display on A1A2.

When a bar 1 (F) signal is produced in the bar/blank circuit, a blank 1 signal is also produced. The blank 1 signal is supplied to U29 and inhibits the outputs. The bar 1 signal is then supplied through J2 to the 7-segment digital display for digit no 1 of the RDL/DDM/MOD display on A1A2 and causes only a bar (segment 9) to be displayed. When the bar/blank circuit produces only a blank 1 signal, the outputs of U29 are inhibited and display is blanked.

g. RDL/DDM/MOD and AUDIO STATUS Driver and Display Circuit (Refer to figure 12.)

Data bits DB0 through DB5 from the parallel bus and CPU assembly A2A1 are applied through connector J1 and buffer U63 to decimal point latch U9; digit no 1 driver circuit U2, U29; digit no 2 driver circuit U3, U30; digit no 3 driver circuit U4, U31; digit no 4 driver circuit U6, U33; and digit no 5 driver circuit U8, U35. The address decoder circuit supplies decoded addresses OUT 4E to U9; OUT 40 to U2, U29; OUT 41 to U3, U30; OUT 42 to U4, U31; OUT 43 to U6, U33; and OUT 44 to U8, U35. When a driver circuit receives the applicable decoded address, data bits at the input are strobed and latched in the driver circuit. The data bits determine the numeral and the indicators that are to be displayed on A1A2. The decimal latch determines the decimal position in the display. The decimal latch output and outputs from the driver circuits are applied through connector J2 to applicable digit displays on A1A2.

Display board A1A2 contains the 7-segment displays and LED's that provide a readout of signal generator output parameters and characteristics. The displays and LED's are driven by signals from keyboard/driver board A1A1. A chart on figure 12 provides the inputs required for a specific 7-segment display.

h. FREQUENCY and MODE Driver and Display Circuits (Refer to figure 13.)

Operation of FREQUENCY and MODE driver and display circuits is the same as described for the RDL/DDM/MOD and AUDIO STATUS driver

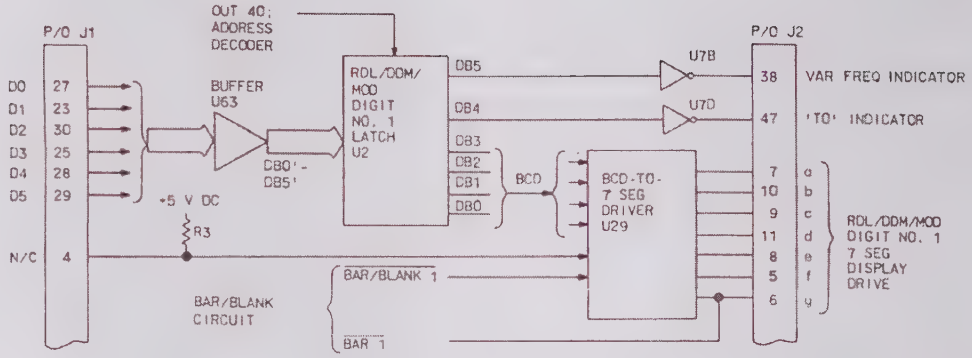

TP5-5569-013

Typical Display Driver Circuit
Figure 11

and display circuits described in paragraph g, except that the information is displayed on the 7-segment FREQUENCY display and indicators and the MODE indicators.

i. RF LEVEL and RF STATUS Driver and Display Circuits (Refer to figure 14.)

Operation of RF LEVEL and RF STATUS driver and display circuits is the same as described for the RDL/DDM/MOD and AUDIO STATUS driver and display circuits described in paragraph g, except that the information is displayed on the 7-segment RF LEVEL display and indicators and on the RF STATUS indicators. The RF LEVEL 7-segment displays indicate OFF when bar inputs are supplied to the 7-segment drivers.

10.3 CONTROLLER/AUDIO ASSEMBLY A2

10.3.1 General

Controller/audio assembly A2 consists of CPU assembly A2A1, analog board A2A2, and TDM board A2A3.

10.3.2 Overall Operation

The CPU assembly A2A1 section of controller/audio assembly A2 provides all the control and information signals necessary for the internal operation of the signal generator.

All audio modulation signals required for signal generator operation are input to analog board A2A2 from TDM board A2A3.

10.3.3 CPU Assembly A2A1 (Refer to figure 15.)

A 16-MHz crystal-controlled clock is frequency divided to provide a 2-MHz ϕ (CLOCK) signal to the CPU and a 1-MHz input to the interrupt timer, which is strapped to provide an interrupt signal every 4 milliseconds for use as a real time clock for system timing.

A delayed I/O request (I/O REQ) is gated with either a read ($\overline{RD}$) or a write ($\overline{WR}$) pulse from the CPU to provide one of the two major I/O control signals, $\overline{I/O\ RD}$ or $\overline{I/O\ WR}$. A memory request signal ($\overline{MREQ}$) is gated with an $\overline{RD}$ or $\overline{WR}$ signal to provide one of the two major memory control signals, $\overline{MEMRD}$ or $\overline{MEMWR}$.

There are 16 address lines (A0 through A15) and 8 data lines (D0 through D7) available on the CPU chip. All eight data lines, and address lines A0 through A7 are bused to other assemblies in the signal generator to provide I/O data transfers. All eight data lines are also bused to the 2716 2-k EPROM's and the 8111-4

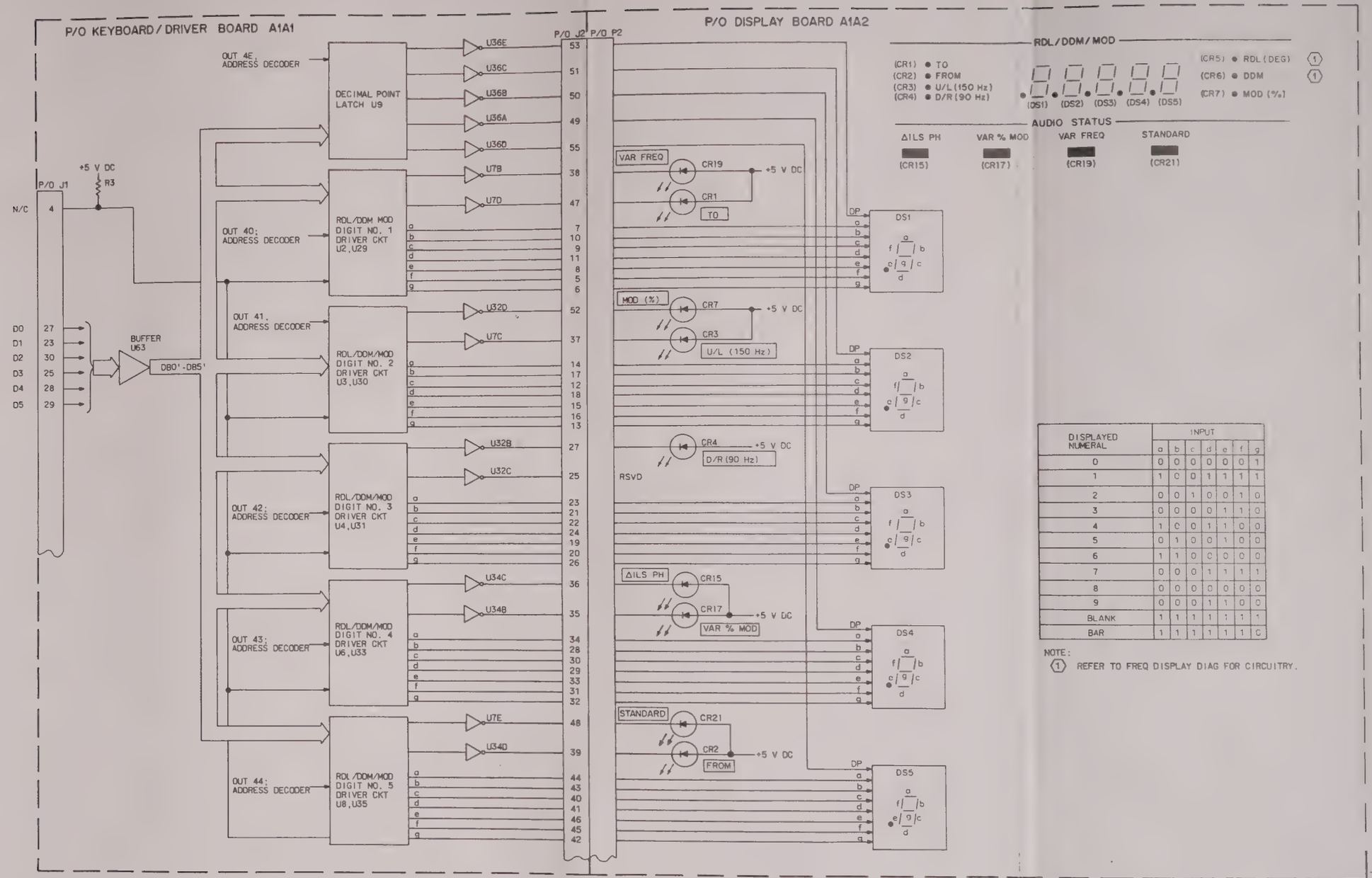

DISPLAYED NUMERAL	INPUT						
	a	b	c	d	e	f	g
0	0	0	0	0	0	0	1
1	1	0	0	1	1	1	1
2	0	0	1	0	0	1	0
3	0	0	0	0	1	1	0
4	1	0	0	1	1	0	0
5	0	1	0	0	1	0	0
6	1	1	0	0	0	0	0
7	0	0	0	1	1	1	1
8	0	0	0	0	0	0	0
9	0	0	0	1	1	0	0
BLANK	1	1	1	1	1	1	1
BAR	1	1	1	1	1	1	0

NOTE:
(1) REFER TO FREQ DISPLAY DIAG FOR CIRCUITRY.

RDL/DDM/MOD and AUDIO STATUS Circuit, Functional Diagram
Figure 12

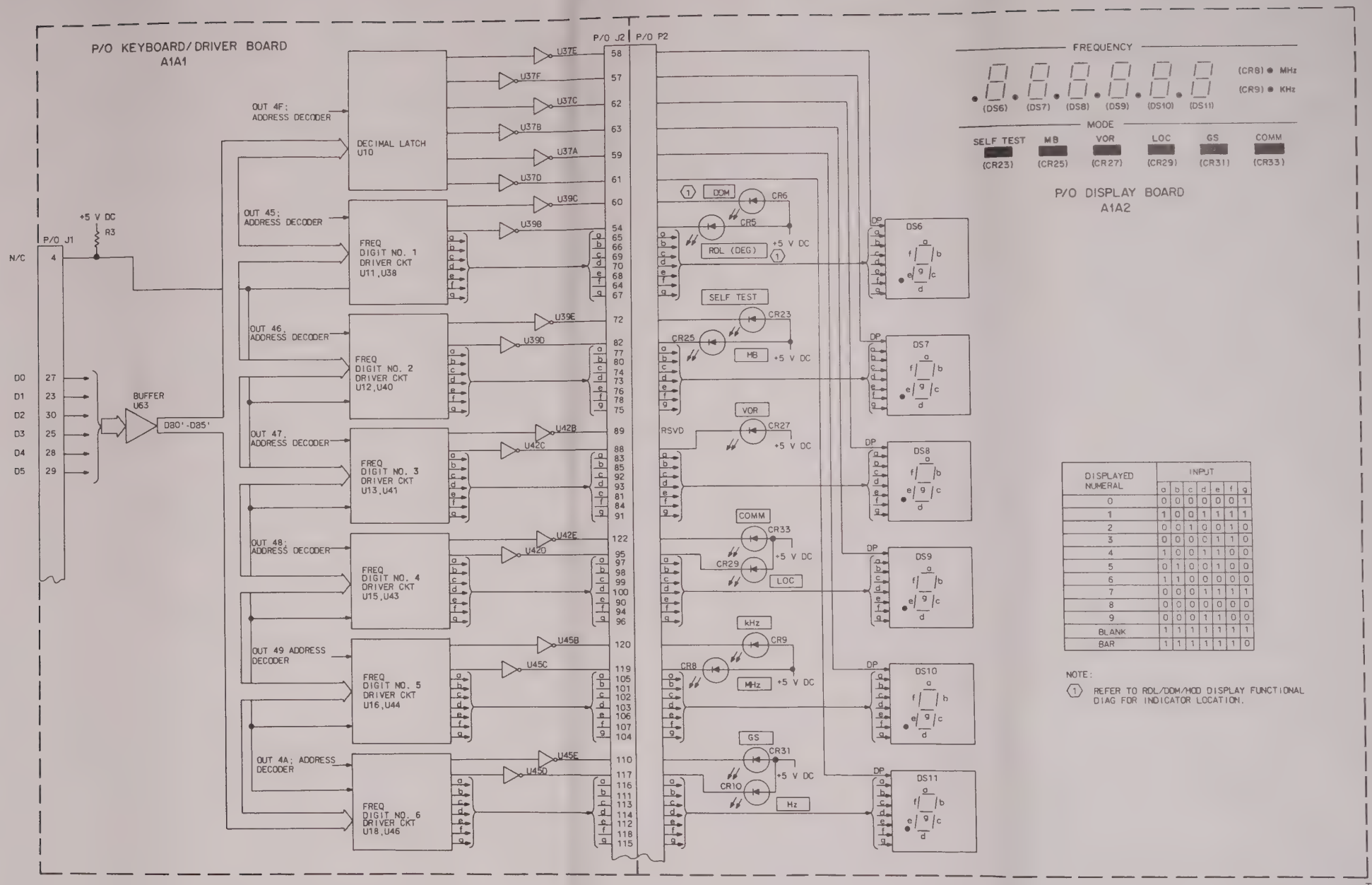

DISPLAYED NUMERAL	INPUT						
	a	b	c	d	e	f	g
0	0	0	0	0	0	0	1
1	1	0	0	1	1	1	1
2	0	0	1	0	0	1	0
3	0	0	0	0	1	1	0
4	1	0	0	1	1	0	0
5	0	1	0	0	1	0	0
6	1	1	0	0	0	0	0
7	0	0	0	1	1	1	1
8	0	0	0	0	0	0	0
9	0	0	0	1	1	0	0
BLANK	1	1	1	1	1	1	1
BAR	1	1	1	1	1	1	0

NOTE:
(1) REFER TO RDL/DDM/MOD DISPLAY FUNCTIONAL DIAG FOR INDICATOR LOCATION.

FREQUENCY and MODE Circuits, Functional Diagram
Figure 13

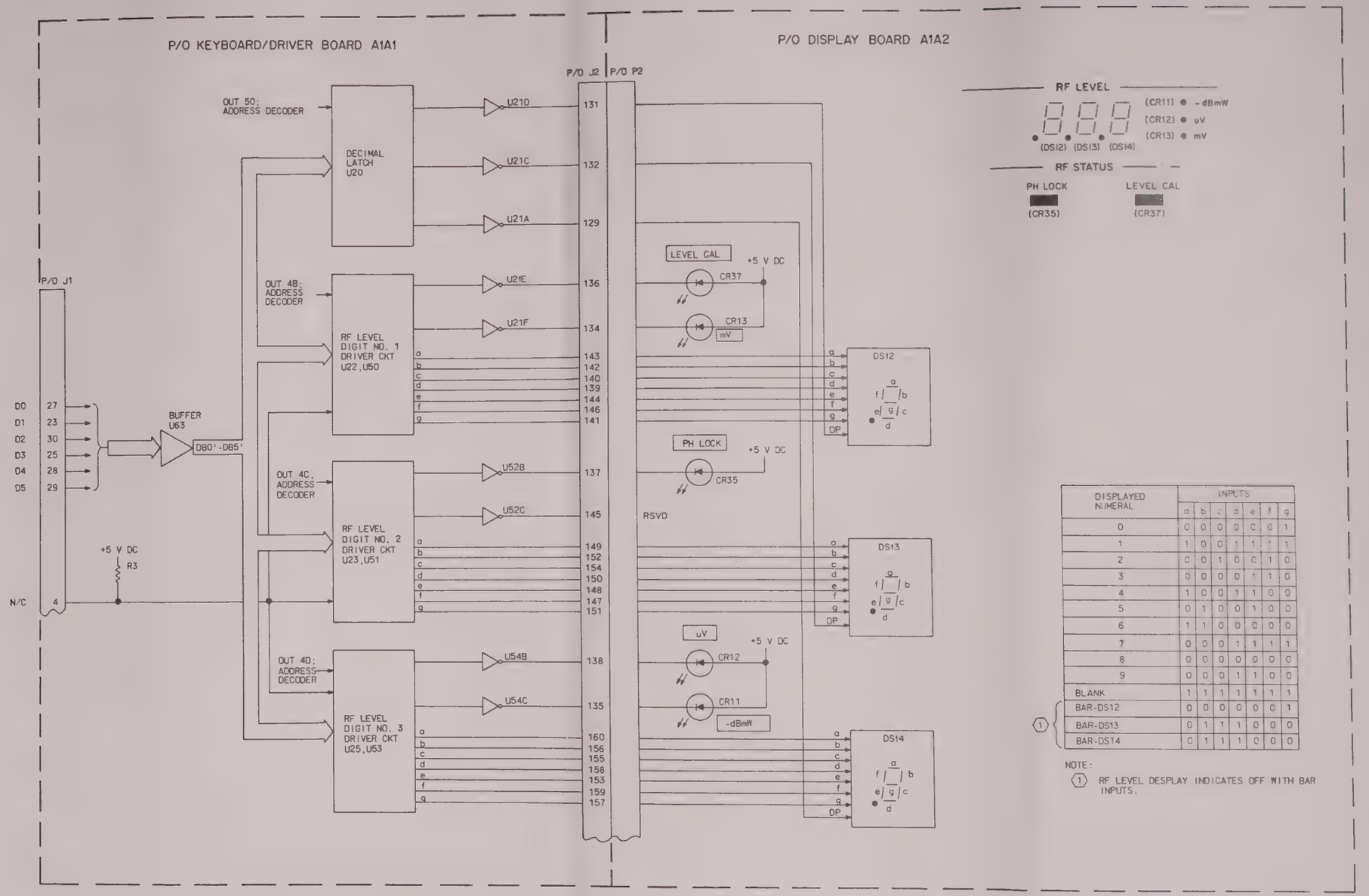

DISPLAYED NUMERAL	INPUTS						
	a	b	c	d	e	f	g
0	0	0	0	0	0	0	1
1	1	0	0	1	1	1	1
2	0	0	1	0	0	1	0
3	0	0	0	0	1	1	0
4	1	0	0	1	1	0	0
5	0	1	0	0	1	0	0
6	1	1	0	0	0	0	0
7	0	0	0	1	1	1	1
8	0	0	0	0	0	0	0
9	0	0	0	1	1	0	0
BLANK	1	1	1	1	1	1	1
(1) BAR-DS12	0	0	0	0	0	0	1
BAR-DS13	0	1	1	1	0	0	0
BAR-DS14	0	1	1	1	0	0	0

NOTE:
(1) RF LEVEL DESPLAY INDICATES OFF WITH BAR INPUTS.

TP5-4888-014

RF LEVEL and RF STATUS Circuits, Functional Diagram
Figure 14

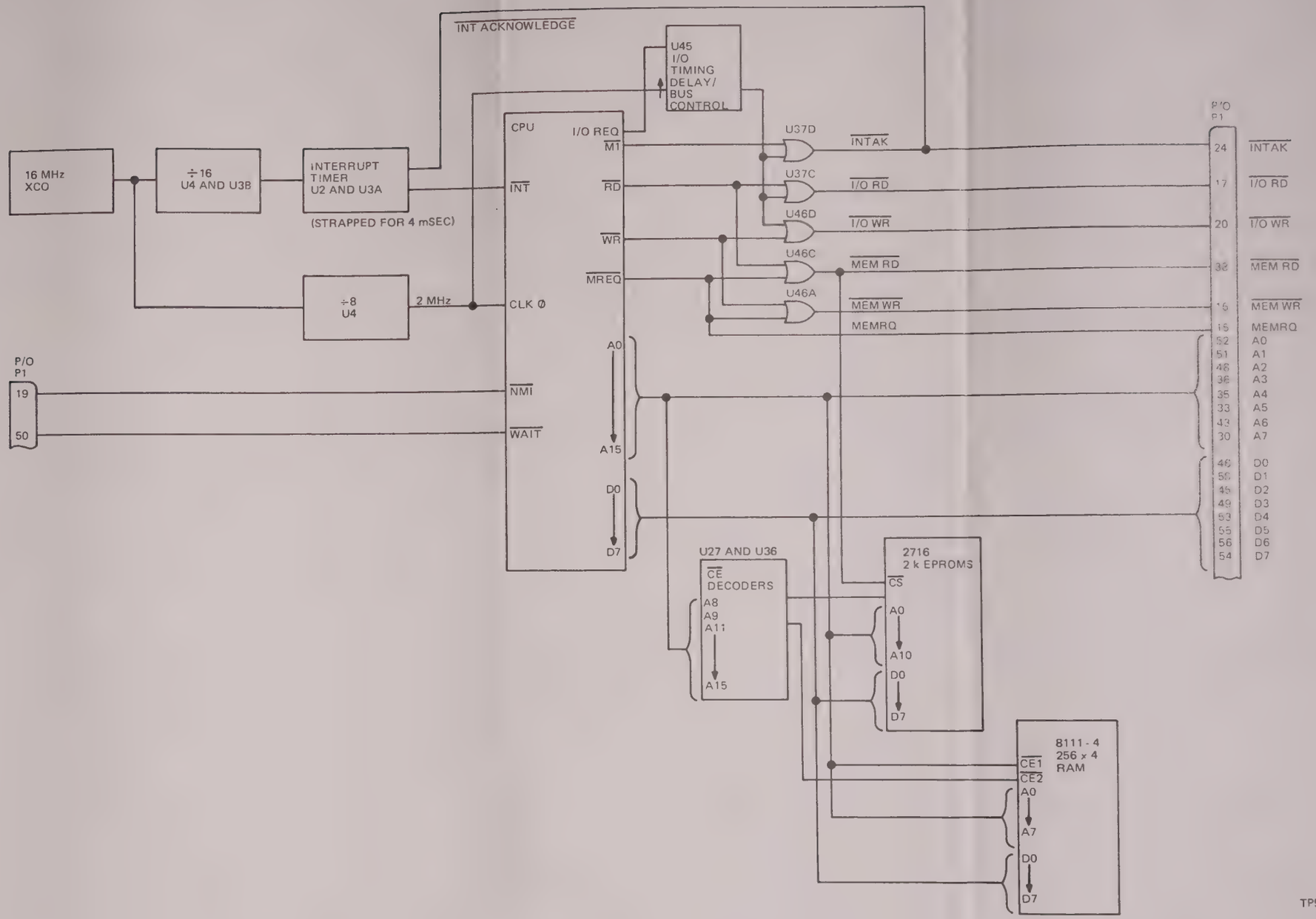

CPU Assembly A2A1, Functional Diagram
Figure 15

256 x 4-bit RAM's in the memory array for program and data storage. Address lines A0 through A10 are used to address the ROM memory, consisting of 12 (maximum) 2-k memory chips for 24-k (maximum) total program storage. Address lines A0 through A7 are used to address the RAM memory, consisting of 1 k maximum in 256-byte blocks. Addresses A8, A9, and A11 through A15 are decode by $\overline{CE}$ decoder chips U27 and U36 and provide chip enable signals $\overline{CE}$, for the ROM memories, and $\overline{CE2}$ for the RAM memories. The memory read ($\overline{MEMRD}$) signal is used as a chip select ($\overline{CS}$) for the ROM memories and controls the bus buffers. Memory write ($\overline{MEMWR}$) controls the read/write mode of the RAM memory.

10.3.4 Analog Board A2A2

10.3.4.1 General

The analog board takes the required modulation signals from TDM board A2A3. The anlog board then adjusts the gain and phase, filters, and combines these signals. The composite modulation signal is supplied to the COMP connector on the rear panel and to demodulator/ALC assembly A3A2. When the signal generator is in the VOR mode, the 30-Hz reference signal is supplied to the AUX connector on the rear panel.

Digital pulse density inputs from TDM board A2A3 are input to the analog board. The digital signals are converted to dc voltages and sent back to TDM board A2A3 for d/a converter operation, and to synthesizer assembly A4 through demodulator/ALC assembly A3A2 for rf frequency slewing (ΔF) control.

10.3.4.2 Modulation Circuits (Refer to figure 16.)

All modulation tones are input to analog board A2A2 through the DAC A, DAC B, and DAC C inputs. The DAC A input (P1-29) provides the following signals:

a. All marker beacon tones.
b. The VOR 30-Hz reference signal.
c. VOR variable audio tones 10 to 2999 Hz.
d. COMM variable audio tones 10 to 2999 Hz.

The modulation tones are applied through amplifier U11, and level adjustment is provided by R12. The signal is then applied through low-pass filter R110, C3, R112 and gain adjust control R10 to switch U2B.

When VOR 30-Hz reference signal is selected, switch U2B is disabled to the ground position by a logic 0 E0 ENABLE signal. The 30-Hz reference signal is then applied through phase adjust control R11 and buffer amplifier U6 to the AUX connector on the rear panel of the signal generator. Phase adjust control R11 allows the phase of the 30-Hz reference signal at the AUX output to be adjusted with respect to the 30-Hz variable signal at the COMP output.

When any of the other tones are selected, switch U2B is enabled to the up position by a logic 1 E0 ENABLE signal from P1-30. The modulation tone is then input to summing amplifier U15.

The DAC B (P123) input provides the 30-Hz variable signal in VOR mode and the 90-Hz, 150-Hz, or 90/150-Hz composite signals in ILS mode. The modulation tones are applied through amplifier U7, and level adjustment is provided by R3. In VOR mode, when the 30-Hz variable tone is selected, switch U3B is disabled to the ground position and switch U2A is enabled to the up position by enable signals from P1-27 and P1-32. The 30-Hz variable tone is applied through VOR phase adjust control R8 and VOR gain adjust control R9 to summing amplifier U15. VOR phase adjust control R8 adjusts the phase of the 30-Hz variable signal VOR composite signal. This phase relationship is measured at the COMP output using a VOR bearing standard. In ILS mode when 90 Hz, 150 Hz, or 90 and 150 Hz is selected, switch U2A is disabled to the ground position and switch U3B is enabled to the up position by enable signals from P1-27 and P1-32. The 90/150-Hz tone is applied through ILS balance and filter circuit and ILS gain adjust control R4 to summing amplifier U15. ILS balance control R7 balances the amplitudes of the 90- and 150-Hz tones.

The DAC C (P1-21) input provides the following signals:

a. The 9960-Hz or 9960 FM tone in VOR mode.
b. The variable audio in LOC or GS modes.
c. COMM variable audio tones, 3000 to 10 000 Hz.
d. VOR variable audio tones, 3000 to 14 000 Hz.

Modulation tones are applied through sample and hold circuit U19, Q1, C11, and C16. The 1-MHz SAMPLE signal (P1-15) is applied to sample chopper Q1. The DAC C signal is sampled at the same rate as the d/a conversion rate (1 MHz) on TDM board A2A3 to eliminate d/a conversion switching spikes. Gain adjustment for the sample and hold circuit is provided by level adjust control R2.

When ILS variable audio tone is selected, switch U3C is disabled to the ground position and switch U3A is enabled to the up position by signals from P1-24 and

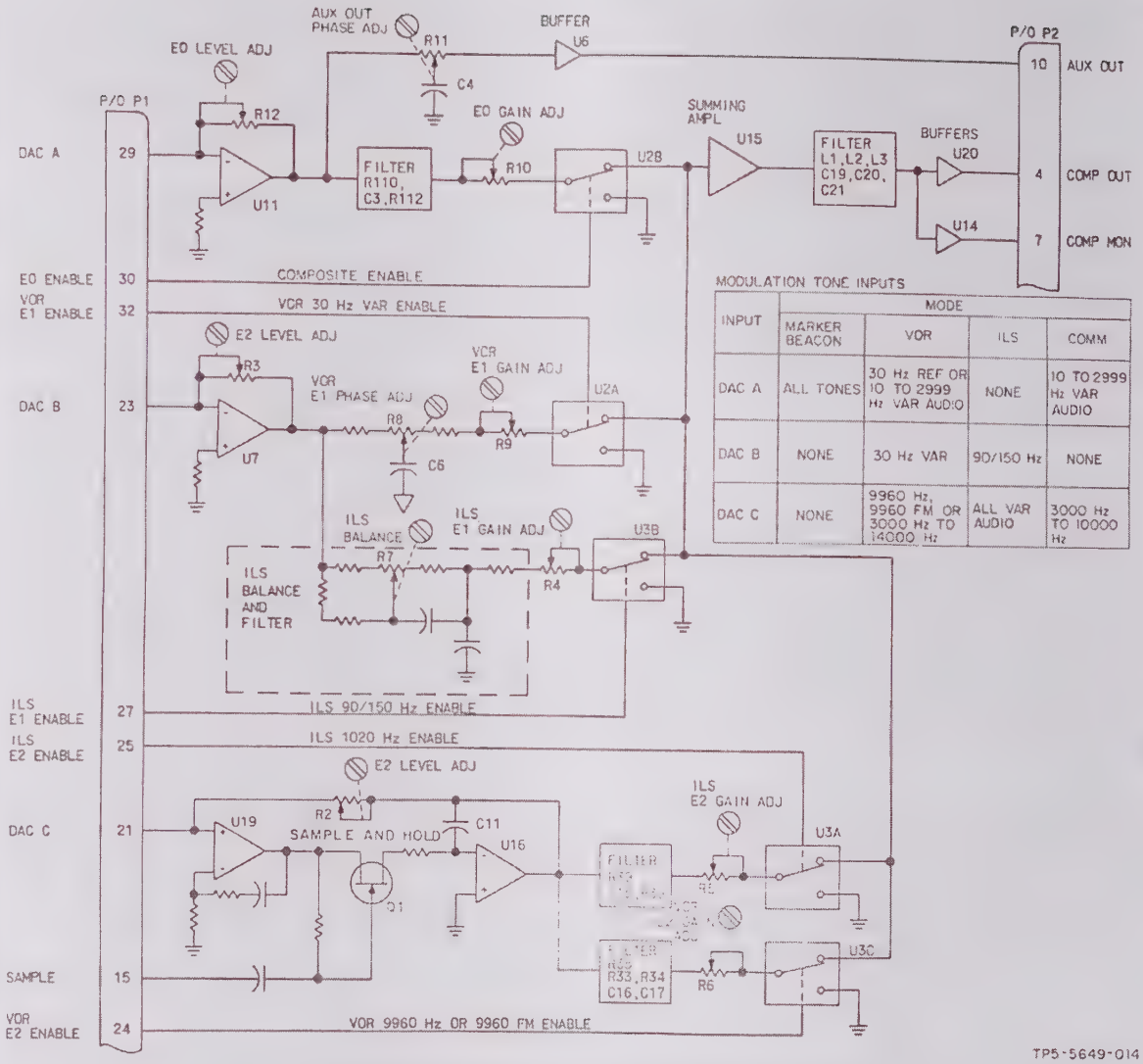

MODULATION TONE INPUTS

INPUT	MODE			
	MARKER BEACON	VOR	ILS	COMM
DAC A	ALL TONES	30 Hz REF OR 10 TO 2999 Hz VAR AUDIO	NONE	10 TO 2999 Hz VAR AUDIO
DAC B	NONE	30 Hz VAR	90/150 Hz	NONE
DAC C	NONE	9960 Hz, 9960 FM OR 3000 Hz TO 14000 Hz	ALL VAR AUDIO	3000 Hz TO 10000 Hz

Analog Board A2A2 Modulation Circuits, Functional Diagram
Figure 16

P1-25. The signal is applied through filter R38, R39, C15 and gain adjust control R5 to summing amplifier U15.

When any of the other tones are selected, switch U3A is disabled to the ground position and switch U3C is enabled to the up position by signals from P1-24 and P1-25. The 9960 signal is applied from P1-21. The 9960 signal is applied through filter R33, R34, R35, C16, C17 and gain adjust control R6 to summing amplifier U15.

Amplifier U15 sums all selected modulation tones from switches U2 and U3 and combines them into a composite modulation signal. The composite signal is applied through filter L1, L2, L3, C19, C20, C21 to remove d/a converter switching noise to buffers U14 and U20. Buffer U20 is output through P2-4 to demodulator/ALC assembly A3A2. Buffer U14 is output through P2-7 to the COMP connector on the rear of the signal generator.

10.3.4.3 Pulse Density Circuits (Refer to figure 17.)

Analog board A2A2 contains four similar pulse density circuits. For simplicity, only one circuit is shown in figure 17.

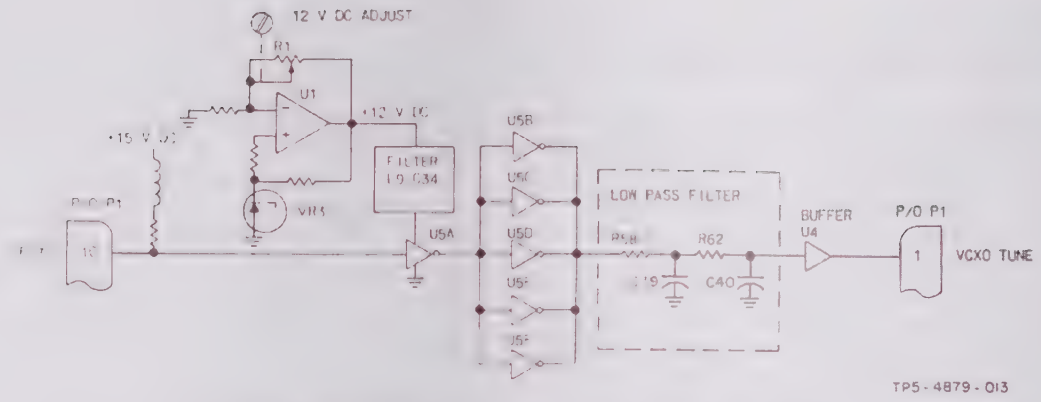

Analog Board A2A2 Pulse Density Circuits, Functional Diagram
Figure 17

The PD0 through PD3 pulse density inputs to analog board A2A2 are digital signals whose pulse densities can be changed by TDM board A2A3. Signal PD3 from P1-10 is input to inverter U5A. The supply voltage to U5 is provided by +12-V dc regulator U1, VR3, R1. Temperature-compensated precision zener reference diode VR3 controls the reference voltage to amplifier U1, and voltage adjustment is provided by +12-V dc adjust control R1. The +12-V dc output from U1 is filtered by L9 and C34 before being input to inverter U5A. The output of U5A is then applied through the remaining inverters of U5 in parallel. The output of the parallel inverters is applied through low-pass filter R58, C39, R62, C40 and buffer U4 to connector P2-1. The low-pass filter converts the pulse density input signal to a dc voltage. As pulse density decreases, dc voltage decreases; as pulse density increases, dc voltage increases. In standard signal generator operations, the AM0, AM1, and AM2 are fixed voltage levels.

The VCXO TUNE output dc voltage controls an oscillator frequency on synthesizer assembly A4. When the ΔF key on the front panel of the signal generator is pressed, the VCXO tune voltage is slewed under control of the CPU until the rf frequency display indicates an rf frequency near the channel frequency. The rf frequency can then be increased or decreased by varying the VCXO tune voltage up or down.

The AM0, AM1, and AM2 outputs control the reference voltage to the multiplying d/a converters on TDM board A2A3. These d/a converters produce audio modulation waveforms. When the percent of modulation is changed on the front panel of the signal generator, the AM0, AM1, or AM2 dc level increases or decreases. This changes the reference voltage to they multiplying d/a converters, which changes the amplitude level of the modulation tones output to the analog board.

10.3.5 TDM Board A2A3

10.3.5.1 General

TDM board A2A3 is provided frequency, phase, and modulation requirement information from the CPU control bus and uses that information to generate the required modulation signals.

10.3.5.2 Overall operation (Refer to figure 18.)

The control logic provides the control and timing for the audio generator. Control registers C0 and C1 are programmable by the CPU. C0 is at address 30 and C1 is at address 31 (hexadecimal). The control register outputs provide control signals to all parts of the TDM board and to analog board A2A2 switching circuits.

When the CPU writes to addresses 20 through 2F, data is loaded into the buffer memory. At the end of the I/O read or write pulse, the data is shifted into whatever memory is addressed by the control latch.

The phase buffer memory is loaded with the phase of the four TDM generator channels following an I/O read or write if the TDM generator is addressed by the control latch. The contents of the phase buffer memory may be read during an I/O read, regardless of the control latch memory address.

The AM generator provides the programmable dc voltages (AM0, AM1, and AM2) used to control the amplitude of the audio signals (DAC A, DAC B, DAC C) produced by the TDM and FM generators. The dc

voltages are generated in pulse density form and are converted to dc voltages on the analog board.

The TDM generator is time division multiplexed to produce four sinusoidal audio signals. The phase and frequency of each signal is programmable. The channels may be combined digitally, which provides a means of generating complex avionics signals. Frequency and phase data is provided by the CPU and stored in the buffer memory. The data is then routed to the proper phase generator memories using the control logic. The phase generator produces signals which are converted into sine waves using a PROM sine code converter. The accumulator circuits can be programmed to add channels together. Multiplying d/a converters convert the TDM channels into analog voltages. The amplitude of the signals out of the d/a converters is determined by the dc levels received from the AM generator.

Control bits are used to initialize the phase, frequency generation, and accumulator operation.

The FM generator operation is similar to that of the TDM generator except that it has a frequency modulation input.

The center frequency is programmed by the CPU via the buffer memory. The sinusoidal FM deviation signal is derived from the TDM generator.

10.3.5.3 Control Logic (Refer to figure 18.)

Control latches U105 and U106 are provided with 8 bits of information from the CPU data bus. This data is used to determine the inputs to the control 0 latch (U103, U104) and the control 1 latch (U102). Control latch U105 is also provided with the LSB of the address line, A0, to decide access to the control 0 latch or control 1 latch. A binary 0 on the A0 line accesses the control 0 latch, while a binary 1 on the A0 line accesses the control 1 latch. The control bit outputs from control 0 latch and control 1 latch provide control signals to the TDM generator, FM generator, buffer memories, and to analog board A2A2.

Table 4 presents the control function of each bit from the control latch. Table 5 gives location of memory addressed by control bits C13 and C14. Table 6 gives mode of operation as determined by control bit C17.

The four MSB's of the address bus (A4 through A7) are input to the address decoder chips (U49, U73, U75, U100, U101); I/O read and write signals are also input to the address decoders. From these inputs the address decode circuits generate the following control

Table 4. Control Functions.

CONTROL BIT	FUNCTION	FUNCTIONAL BLOCK
C00	Frequency memory enable	TDM generator
C01	Phase memory enable	TDM generator
C02	Frequency memory enable	FM generator
C03	ΔF enable	FM generator
C04	Accumulator logic enable	Accumulator logic
C05	E0 enable	To analog board
C06	E1 enable	To analog board
C07	E2 enable and sample	To analog board
C13	Address bit	Refer to table 5.
C14	Address bit	Refer to table 5.
C17	Mode bit	Refer to table 6.

Table 5. Memory Address Control.

CONTROL BIT		MEMORY ADDRESSED
C14	C13	
0	0	
0	1	AM
1	0	TDM
1	1	FM

Table 6. Mode Control.

CONTROL BIT	MODE
C17	
0	ILS
1	VOR

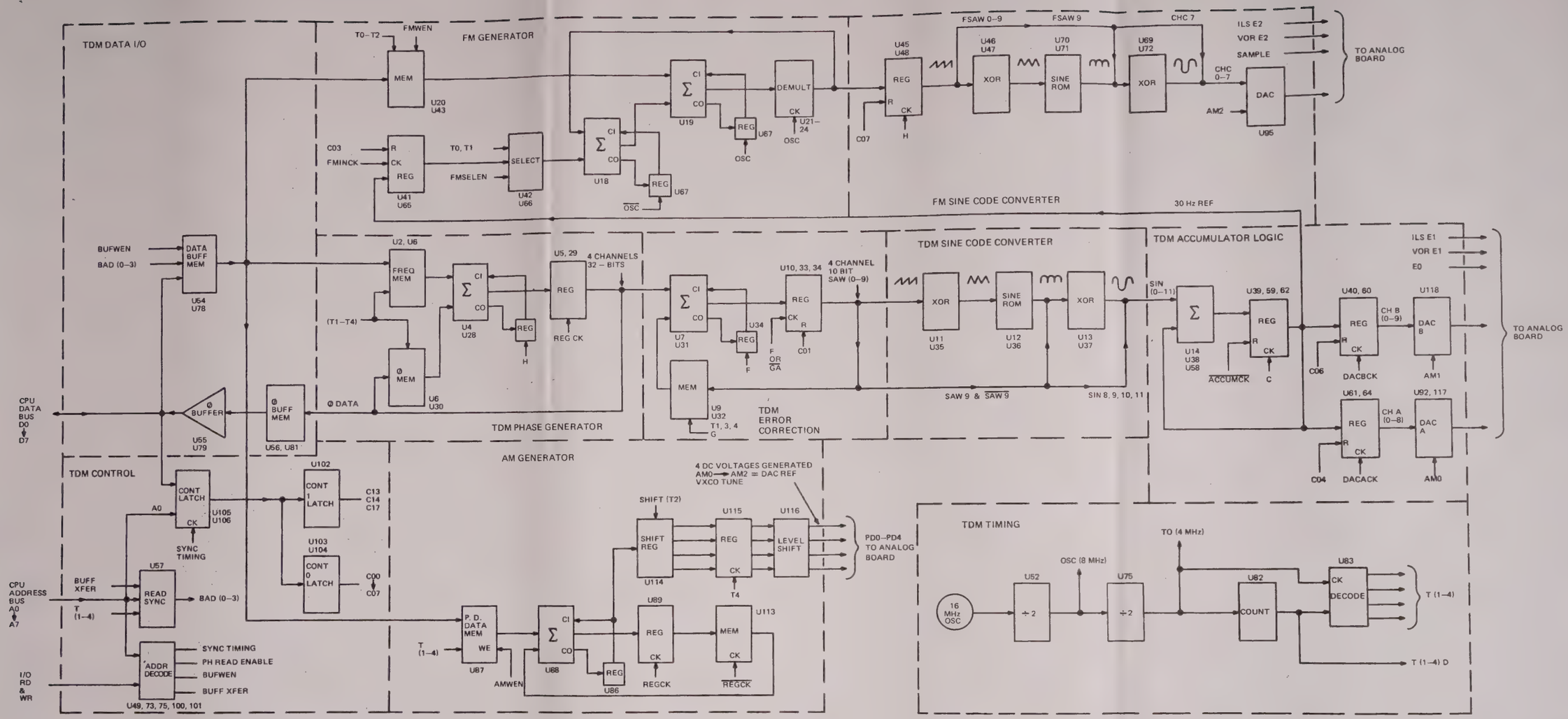

TP5-5585-014

TDM Board A2A3, Functional Diagram
Figure 18

signals: SYNC TIMING, PH READ ENABLE, BUFWEN, and BUFFER XFER. The sync timing signal is used to clock in data to the control latch and synchronize the update of control registers 0 and 1 with the TDM board internal clock. Phase read enable allows the 3-state buffer (U55 and U79) to write phase information on the CPU data bus; BUFWEN (buffer write enable) allows information on the CPU data bus to be written into the buffer memory (U54, U78) during an I/O write to a proper I/O port. $\overline{\text{BUFFER XFER}}$ goes low at the end of an I/O read or write pulse and stays low until the next rising edge of clock signal $\overline{\text{T4}}$. It is used to transfer control of the data and phase buffer memory address lines to the CPU to allow CPU-TDM board data exchange. $\overline{\text{BUFFER XFER}}$ is also used to generate the sync timing signal discussed earlier.

CPU address information is available from BAD (0-3) lines only when $\overline{\text{BUFFER XFER}}$ is low. This coincides with the write enable pulses from U84 and allows the transfer of data from buffer memory to whatever memory is specified by C13 and C14 if an I/O write is taking place.

10.3.5.4 TDM Data I/O (Refer to figure 18.)

Buffer memory chips U54 and U78 are write enabled by the $\overline{\text{BUFWEN}}$ signal, which can be updated only during an I/O write pulse. Information on the CPU data bus is input to the buffer memory and transferred to addressed memory at the end of the I/O write pulse.

When the TDM phase generator frequency memory (U2, U26) is write enabled by control bits C13 and C14, the phase buffer memory is also write enabled. The instantaneous phase of each TDM channel is loaded into the phase buffer memory (U56, U81). This phase information may then be read during properly addressed I/O read, regardless of the status of control bits C13 and C14, by generating a phase read enable from the address decode circuits. The phase read enable signal turns on the phase buffer chips (U55, U79) and allows the phase information onto the CPU data bus.

10.3.5.5 TDM Timing (Refer to figure 18.)

The timing signals for TDM board A2A3 are generated from a crystal-controlled 16-MHz oscillator (Y1 and associated components). The 16-MHz is frequency divided by 2 in U52 to provide an 8-MHz (OSC) signal. The OSC signal is again frequency divided by 2 in U75 to provide 4-MHz TO and $\overline{\text{TO}}$ signals. $\overline{\text{TO}}$ is used to clock counter chip U82 that drives U83 to provide timing signals T1 through T4. T1 is at a rate of 2 MHz and T2, T3, and T4 are at frequencies one-half the rate of the next lower T ( ) signal; for example, T2 is one-half the rate of T1, or 1 MHz.

10.3.5.6 AM Generator (Refer to figure 18.)

The AM generator has four time division multiplexed channels each consisting of 4 nibbles of data (1 nibble = 4 bits). The 16 nibbles of data are input from the least significant 4 bits of the data buffer memory, 1 nibble at a time, to the pulse density memory U87. The pulse density memory inverts data when read from. The pulse density memory outputs go to adder chip U88 where they are summed with the outputs of memory U113. Outputs from U88 are fed back and inverted through register U89 to memory U113. This time division multiplexed digital integration process results in carry pulses from the C4 output of U88. At proper times, these carry pulses are input to shift register U114. Outputs from the shift register drive latch chip U115. U116 is an open collector inverter chip that inverts and level shifts the outputs of U115. The outputs of U116 go to analog board A2A2, which has pullup resistors to 15 V dc. A large binary number stored in the pulse density memory causes fewer carry pulses, in turn causing the pulse density output to be high a larger percentage of the time. These pulse density outputs are used by analog board A2A2 to control the amplitude of the generated audio signals.

10.3.5.7 TDM Phase Generator (Refer to figure 18.)

Frequency memory chips U2 and U26 are loaded when control bits C13 and C14 activate $\overline{\text{FWEN}}$ and $\overline{\text{BUFFER XFER}}$ is activated at the end of an I/O read or write pulse. Data in frequency memory is added to data in phase memory by adders U4 and U28. The outputs of the adders are used to drive registers U5 and U28. The outputs of register U5 and U29 drive phase memory (U6, U30). They also go to the TDM error corrections circuits.

The frequency constant in frequency memory is made available to the adder inputs on a time division multiplexed basis. The frequency constant is added to the phase constant from phase memory each time that channel is addressed by the timing signals. The phase memory is then updated with the previous sum. This digital integration process, consisting of the continual addition of frequency and phase constants, with the phase constant equaling the sum of

the previous frequency and phase, produces a digital sawtooth signal that will be modified to produce the desired audio outputs.

Time division multiplexing of the frequency memory outputs; addressing the frequency memory with timing signals, T1D, T2, T3, and T4; provides four separate channels, each programmable in both frequency and phase. Each channel has 32 bits for representing frequency and phase.

10.3.5.8 TDM Error Correction Logic (Refer to figure 18.)

The TDM error correction circuitry takes the four 32-bit channels from the phase generator and produces four 10-bit channels. The 10 MSB's of the 32 bits pass directly through the circuit modified as described below. The correction circuitry stores the 6 MSB's of the otherwise unused 22 less significant channel bits and adds them to equivalent 6 bits during the next time multiplex cycle. If a carry results, it is added to the 10-bit word. This scheme allows for greater frequency and phase accuracy than would be otherwise possible with only 10 bits of information.

The output of the phase generator circuit goes to adders U7 and U31. The most significant 8 bits of each channel pass through the adders and are latched into U10, U33, and U34. The data is valid at their outputs long enough to be used by following circuits. At different times the next 8 MSB's are presented to the adders. These 8 bits are added to 6 bits from U9 and U32. If a carry results, it is latched into U34 and is added to the 8 MSB's in the operation described previously. The 6 LSB's of the addition are then latched into U10 and U33 where they are used to update memories U9 and U32. The two other bits are latched into U34 where they are used by following circuits.

10.3.5.9 TDM Sine Code Converter (Refer to figure 18.)

The sawtooth waveforms from the error corrections logic are exclusive ORed by U11 and U35. The outputs of the exclusive OR (XOR) chips are triangle signals of the same frequency as the sawtooth signal. The triangle waveforms are input to the sine ROM chips (U12, U36). The outputs of the sine ROM appear as digital representations of full-wave rectified sine waves. These outputs are exclusive ORed to provide sine signals. The output of the converter is four channels of 10 bits each.

10.3.5.10 TDM Accumulator Logic (Refer to figure 18.)

At this point in the circuit, each TDM channel (CH 0 through CH 3) has 10 bits for representation of phase and frequency. Table 7 shows the TDM channel assignments.

Table 7. TDM Channel Assignments.

MODE	CHANNEL			
	CH 0	CH 1	CH 2	CH 3
VOR	30 Hz ref		1020 Hz	30 Hz var
ILS	90 Hz		150 Hz	

In VOR mode channels CH 0 and CH 1 are added to create the 30-Hz reference signal sent to the FM generator. CH 2 generates the 30-Hz reference for the aux output or produces variable audio frequency from 10 to 2999 Hz for the modulation signal. These channel 2 signals appear on DAC A. The 30-Hz variable signal programmed in CH 3 appears on output DAC B.

In ILS mode, the accumulator is programmed to add all four TDM generator channels. The resulting signal appears on output DAC B. In marker beacon mode, all audio signals are produced by CH 2 and appear on DAC A. In the COMM mode, audio signals from 10 to 2999 Hz are produced by CH 2 and appear on DAC A.

10.3.5.11 FM Generator (Refer to figure 18.)

The FM generator operation is similar to that of the TDM generator except that it has a modulation input. It has a single channel operating at a 1-MHz sample rate. It produces the following signals:

a. 9960 Hz and 9960 FM in the VOR mode.
b. Variable audio tones in ILS modes.
c. 3000- to 14 000-Hz variable audio tones in the VOR mode.
d. 3000- to 10 000-Hz variable audio tones in the COMM mode.

Control bits are used to enable the FM input and phase generation. Sawtooth data from the phase generator is converted to sinusoidal data by a PROM. This data is converted to an analog signal by a d/a converter.

Memory chips U20 and U43 are loaded from buffer memory when $\overline{\text{FMWEN}}$ is activated by control bits C13 and C14 and $\overline{\text{BUFFER XFER}}$ goes active at the end of an I/O write pulse.

When $\overline{\text{FMSELEN}}$ is active, select chips U42 and U66 are strobed to allow selection of accumulator data through latches U41 and U65. Adder chip U18 sums the outputs of the select chips and the outputs of demultiplexer chips U21 through U24.

Adder U19 sums the outputs of U18 and memory chips U20 and U43 with the result going to demultiplexers U21 through U24. The demultiplexer circuit (U21 through 24) consists of four shift registers that are used to store the results of previous operations for controlled periods of time. The register outputs are available to be latched into U45 and U48 to be processed as 10 time concurrent data bits and to be fed back as data to U18.

10.3.5.12 FM Sine Code Converter (Refer to figure 18.)

The 10 signal inputs to the sine code converter from the FM generator are clocked out of registers U45 and U48 as 10 bits representing a sawtooth waveform. As in the TDM generator, they are exclusive ORed to form triangle waves and converted to digital representations of full-wave rectified sine waves by the sine ROM (U70, U71). That signal is exclusive ORed to generate sinusoidal waveforms.

The sinusoidal waveform, channels 0 through 7, are input to DAC C to be output to analog board A2A2.

10.4 RF Modulator Assembly A3

10.4.1 General

Rf modulator assembly A3 consists of rf strip line assembly A3A1, demodulator/ALC assembly A3A2, and counter-I/O board A3A3. Demodulator/ALC assembly A3A2 receives the composite audio signal from controller/audio assembly A2 and sets reference rf and modulation levels. Rf strip line assembly A3A1 combines the rf carrier signal with the audio modulation signal. The unmodulated rf carrier is amplified and then coupled to counter-I/O board A3A3 to allow a frequency count to be supplied to the front panel display through the processor. Counter-I/O board A3A3 also contains I/O ports to allow the processor to output attenuator select, synthesizer frequency select, and mode control functions.

Demodulator/ALC Assembly A3A2 will also process an external modulation signal from the EXT MOD connector on the rear panel.

10.4.2 RF Strip Line Assembly A3A1 (Refer to figure 19 and schematic diagram in diagrams section.)

The rf output from synthesizer A4 is input through connector J2 to power divider/attenuator R1, R2, R3. With a 50-ohm input, the power divider provides 50-ohm outputs with 6-dB attenuation to rf amplifier Q1, Q2 through a microstrip delay line and 7.75-dB attenuator R4, R5, R36 and to the microstrip modulator.

Rf amplifier Q1, Q2 and associated circuitry amplifies the unmodulated rf signal to +20 dB mW and inputs the signal to 6-dB attenuator R15, R16, R17. The output from this attenuator is applied to the microstrip coupler. The microstrip coupler provides 0-dB mW rf signal through connector J1 to counter-I/O board A3A3 for frequency counting. A through output from the microstrip coupler is routed through a microstrip delay line and 6-dB attenuator R22, R23, R24 to mixer U1. Mixer U1 functions as a synchronous detector by mixing a sample of the modulated rf signal from directional coupler CP1, with the +7-dB mW unmodulated carrier signal from 6-dB attenuator R22, R23, R24. The output of the mixer is applied through low-pass filter L4, C14 and P1-6 to demodulator/ALC assembly A3A2. Filter L4, C14 filters out the mixer sum products and supplies only demodulated audio and a dc level to A3A2. The dc voltage represents the level of the rf carrier; ac voltage represents the level of the modulation sidebands.

The rf signal from power divider R1, R2, R3 and the modulation signal from demodulator/ALC assembly A3A2 are applied to the logarithmic microstrip modulator. The microstrip modulator is composed of C15 through C23, R27 through R35, CR1 through CR8, and the microstrip circuit. Capacitors C15 through C23 are dc blocking capacitors. Resistors R27 through R34 provide bias voltage to pin diodes CR1 through CR8. The pin diodes are special semiconductor devices that do not rectify at rf frequencies. Diodes behave like variable resistors whose values are controlled by the dc bias current supplied to them by resistors whose values are controlled by the dc bias current supplied to them by resistors R27 through R34. The microstrip circuit between each diode represents one-quarter wavelength at center frequency of 205 MHz. The dielectric constant of the board assembly is approximately 10.5, which causes the actual length of

the microstrip to be divided by approximately 2.6. The actual wavelength of 205 MHz is 365.76 mm (14.4 in). Dividing by 2.6, the actual length of microstrip circuit between pin diodes is 138.66 mm (5.459 in).

The output of the modulator is applied through capacitor C28 to directional coupler CP1. Capacitor C28 allows adjustment for phase compensation in the glideslope frequency range. CP1 is a 10-dB rf directional broadband coupler. A sample of the modulated rf signal is provided to mixer U1 as discussed previously. The through output of directional coupler CP1 is provided through connector J3 to digitally controlled attenuator A6AT1.

10.4.3 Demodulator/ALC Assembly A3A2 (Refer to figure 19.)

The composite audio signal from analog board A2A2 is input to demodulator/ALC assembly A3A2 through connector J2-1 and low-pass filter L1-C20 to modulation level adjust circuit U9 and U13 (refer to figure 19. The gain of amplifier U9 is controlled by switch array U13. I/O A and I/O B control signals from J2-10 and J2-7 are input to a binary to 1-of-4 decoder in U13. The code present at the input to the decoder determines which switch is energized. The four switches select which feedback resistor will set the gain on amplifier U9. Variable resistors R1, R3, R2, and R4 adjust the percent of modulation for audio tones for marker beacon, glideslope, localizer, and VOR frequencies respectively. Refer to the chart in figure 20 for I/O A and B inputs required for modulation selection. The selected composite signal from U13 is applied to U10. U10 and associated circuitry is a high impedance ac follower circuit. The output of U10 is then applied to summer/integrator circuit U16.

Rf level adjust circuit U1 and U4 provides a dc reference value through buffer U5 to summer/integrator circuit U16. U1 and U4 work identically as the U9, U13 circuit. The I/O C and D signals from J2-11 and J2-12 control the switch selection in U4. Variable resistor R7 sets the gain of amplifier U1 in the marker beacon range, R6 sets the gain in the glideslope range, and R8 sets the gain in the VOR/localizer range.

The demodulated audio signal from rf strip line assembly A3A1 is also supplied to summer/integrator circuit U16 through connector J3-6 and amplifier U11. The demodulated signal is an ac-plus-a-dc signal. The ac signal level is proportional to the input ac signal to the summer/integrator, and the dc signal level is proportional to the dc signal to the summer integrator. The ratio of the ac and dc signal holds the percent of modulation constant, as discussed in paragraph 10.4.2. The demodulated output is also supplied through amplifiers U7 and U8 and connector J2-2 to the DEMOD connector on the rear panel of the signal generator.

External modulation signals are applied to U14 through the EXT MOD connector on the rear panel of the signal generator and J2-5. The signals are inverted and buffered by U14 and then input to summer U16. Output level of modulation signal is set by R5.

Amplifier U16 (figure 20) sums the inputs and integrates to establish the proper loop parameters. A double integration method is used to minimize phase shift introduced into the modulation signal and to give optimum noise performance.

The output of U16 is applied to exponential linearizer circuit U12 and to level comparator circuit U17A and U17B. The level comparator senses if the output from U16 drops above or below a specified dc window level. During normal operation, the output of the level comparator is low and the LEVEL CAL indicator on the front panel is on. If the output level from U16 exceeds the specified U17 window level, the comparator output will go high and is output as the rf level bit through connector U2-80. The output goes high only if the rf signal is shut off on the front panel, or if a circuit fails in the signal generator. If the rf signal is shut off on the front panel or if a circuit fails, the LEVEL CAL indicator on the front panel will turn off, signifying that the signal generator must be repaired.

Exponential linearizer circuit (figure 21) U12 is required to compensate for the logarithmic modulator on rf strip line assembly A3A1. When the exponential and logarithmic functions are combined, the resultant output from A3A1 will be the required linear function. Q1 through Q4 are connected as diodes. When the input to U12 is low, current output through the feedback loop is insufficient to turn on any transistor, and the gain of the circuit is low. As input to U12 is increased, Q4 will turn on and effectively remove its leg from the feedback loop, and gain will increase. Again, as the input increases, Q3, Q2, and Q1 will turn on and remove their legs from the feedback loop until the effective resistance in the feedback loop is the value of R15. Values of the resistors in the feedback loop are selected so that the resultant gain of the circuit from minimum to maximum output will be an exponential curve, as shown in figure 21). Clamping diode CR3 prevents the circuit from oscillating when the rf output is shut off on the front panel of the signal generator.

Note

Later units of the 479S-6A do not contain CR3.

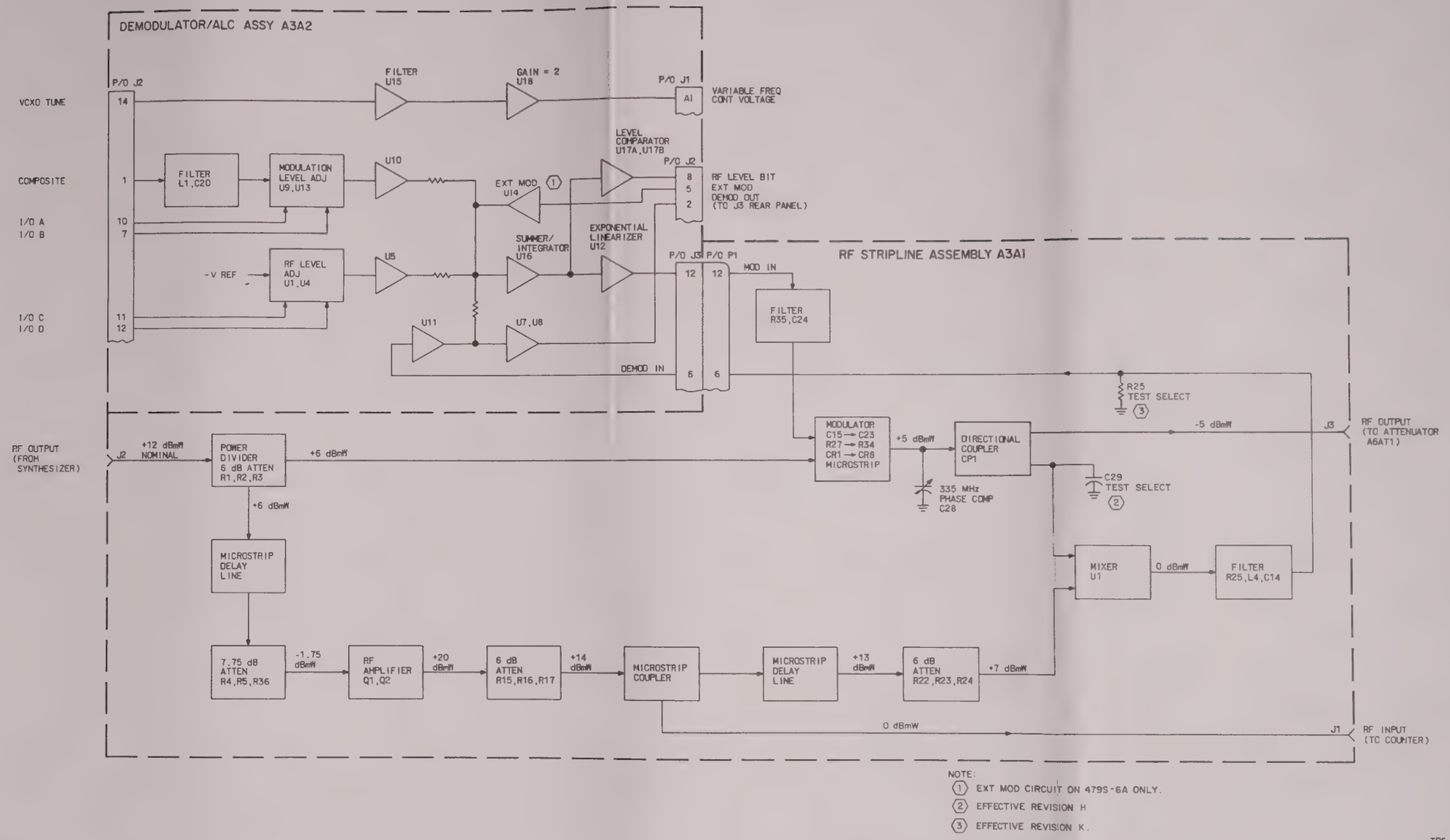

RF Strip Line Assembly A3A1-Demodulator/ALC Board A3A2, Functional Diagram
Figure 19

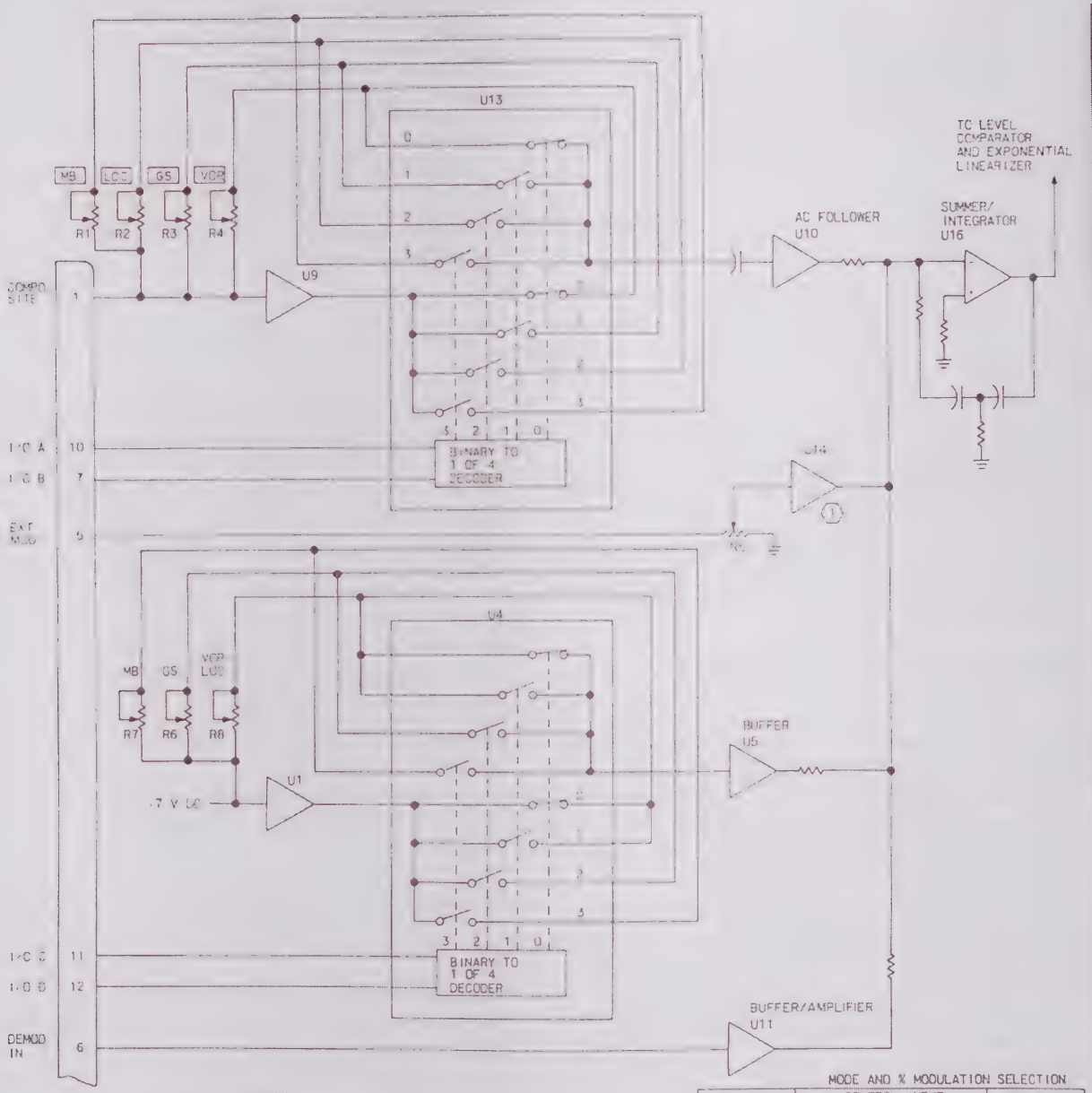

MODE AND % MODULATION SELECTION

MODE	CONTROL INPUT (I/CA • I/CC)	CONTROL INPUT (I/CB • I/CD)	STD % MODULATION
VOR	0	0	30
LOCALIZER	1	0	20
GLIDESLOPE	0	1	40
MARKER BEACON	1	1	95

TP5-4886-014

A3A2 Level Adjust Circuits, Functional Diagram
Figure 20

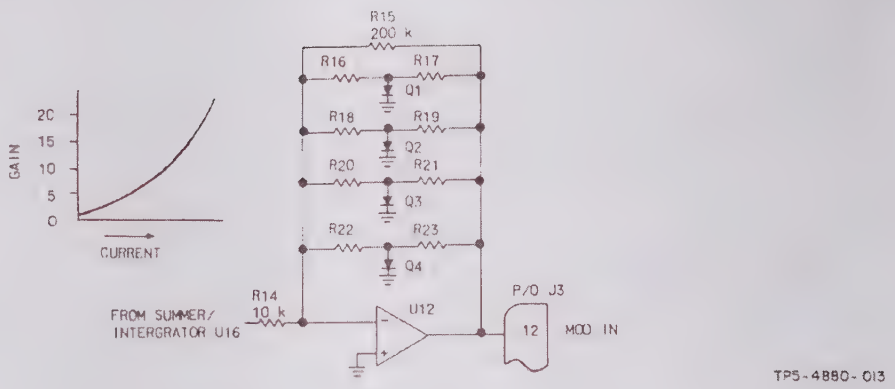

Exponential Linearizer Circuit, Functional Diagram
Figure 21

The VCXO TUNE voltage from analog board A2A2 is input to the demodulator/ALC assembly at connector J2-14 (figure 19). The dc voltage is input to low-pass multiple feedback filter U15. U15 is a noise filter to eliminate all frequencies above 10 Hz. The output from U15 is input to amplifier U18 (gain = 2) and provided to connector J1-A1. This variable frequency control voltage is sent to synthesizer assembly A4 for oscillator control.

10.4.4 Counter-I/O Board A3A3 (Refer to figure 22.)

Counter-I/O board A3A3 outputs frequency display information, phase lock, rf level bit, and counter complete data to the CPU data bus. Inputs from the CPU data bus to A3A3 are synthesizer rf frequency selects, attenuator level select, mode control selects, rf on/off, and VCXO select data.

All I/O functions on A3A3 are controlled by 3-to-8 line address decoders U3 and U10. The CPU address bus (A0 through A7), $\overline{\text{I/O WR}}$ and $\overline{\text{I/O RD}}$ are input to the decoders. Address bits A0, A1, and A2 supply 3-bit binary code, and address bits A3, A4, A5, A6, and A7, along with $\overline{\text{I/O RD}}$ and $\overline{\text{I/O WR}}$ bits, enable decoder operation. Refer to chart on figure 22 for decoder data outputs. The enable outputs from U10 and U13 control data inputs and outputs to the CPU data bus.

The actual rf frequency being output from the signal generator is applied to divide-by-10 circuit U34 through connector P1. U34 output is applied to NAND gate U36B. The 100-kHz clock from connector J2 is divided by 10 000 by U1, U4, U6, and U7, producing a 20-percent duty cycle, 10-Hz signal (refer to figure 23). Flip-flop U9A divides this signal by 2 for one cycle, producing a 100-ms counter enable pulse. At the end of 100-ms gate from U9A-Q, flip-flop U9B-Q is set to a "1" signifying a "counter-ready" status. The CPU monitors the "counter-ready" status by executing an $\overline{\text{IN 14}}$ during the software idle loop. As long as the "counter ready" is a "0", the CPU processes the PH LOCK and RF LEVEL bit status only. This occurs many times in the 200-ms period during which the counter is either counting or waiting to count. With a "1" at U9B-Q, the next software cycle would acknowledge the counter-ready status ($\overline{\text{IN 14}}$ data bit 7 = 1), and read in the frequency count by enabling outputs $\overline{\text{IN 10}}$, $\overline{\text{IN 11}}$, $\overline{\text{IN 12}}$, $\overline{\text{IN 15}}$, in sequence. After the frequency data is read by the CPU, the software enables input $\overline{\text{IN 13}}$, which resets flip-flop U9B-Q, setting the "counter-ready" status back to 0. The CPU processes the PH LOCK and RF LEVEL bit status at this time, then returns to the remainder of the idle loop.

The 100-ms counter enable pulse from U9A-Q is applied to NAND gate U36B, producing a 100-ms window time for counting. The output of U36B is applied to a chain of seven decade counters (U33-U35, U30, U18, U27, U21, U24, and U16) connected in series. The 100-MHz through 100-Hz decode bcd count is held at the outputs of the decade counters until the CPU requests frequency count information.

When front panel rf frequency, rf output, or mode is changed, the CPU data bus transmits this data to counter-I/O board A3A3 data latches. The data latches retain the last active data bus data until new data is strobed in by the $\overline{\text{OUT 10}}$ through $\overline{\text{OUT 13}}$ latch enable lines. The 8-bit latches U8, U11A, U11B and U14, U17A, U17B provide frequency tune bits to synthesizer assembly A4; 7-bit latch U23, U20A provides rf output level bits RF1 through RF64 to digital attenuator A5AT1; and 6-bit latch U5 provides

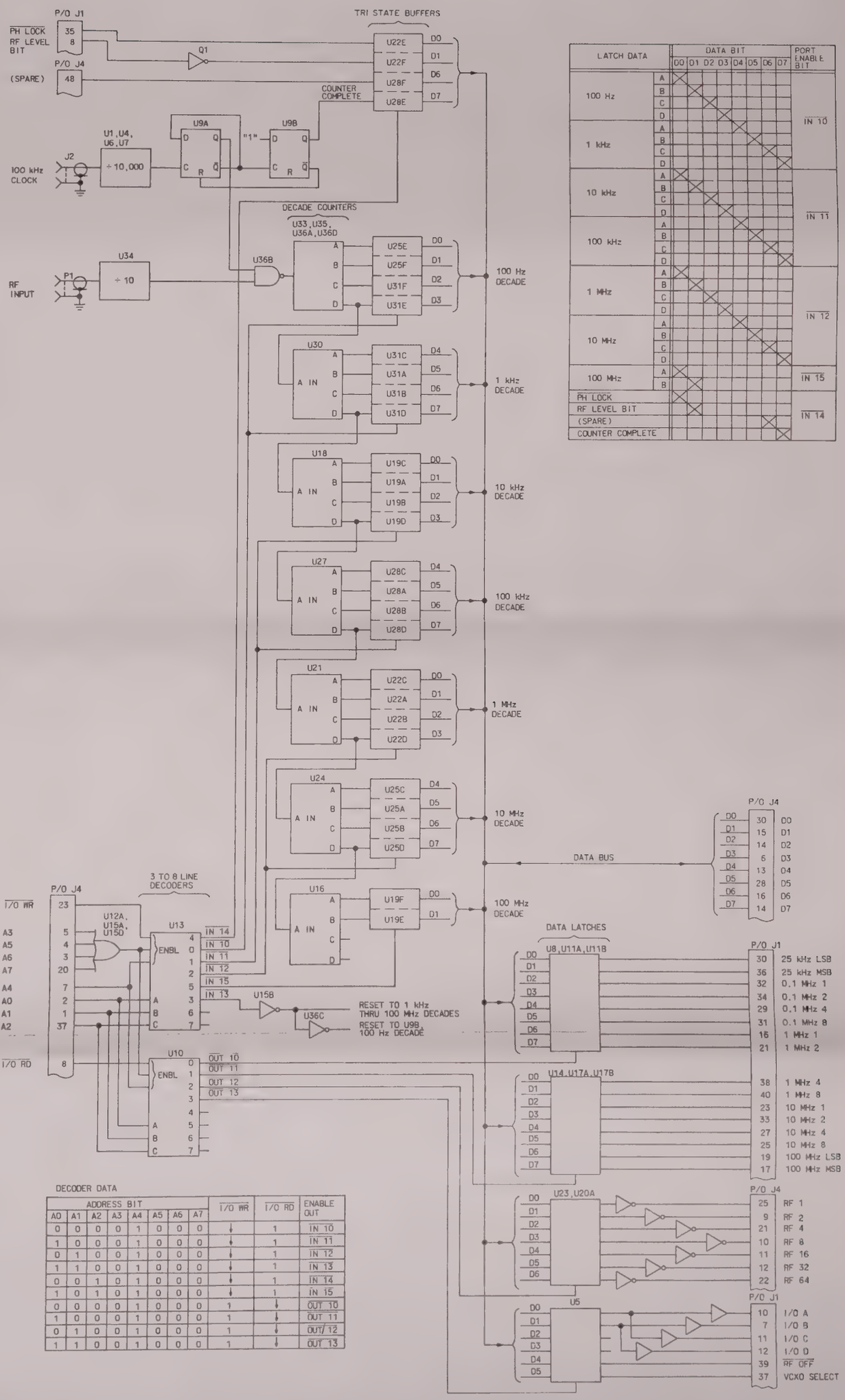

LATCH DATA		DATA BIT D0	D1	D2	D3	D4	D5	D6	D7	PORT ENABLE BIT
100 Hz	A									IN 10
	B									
	C									
	D									
1 kHz	A									
	B									
	C									
	D									
10 kHz	A									IN 11
	B									
	C									
	D									
100 kHz	A									
	B									
	C									
	D									
1 MHz	A									IN 12
	B									
	C									
	D									
10 MHz	A									
	B									
	C									
	D									
100 MHz	A									IN 15
	B									
PH LOCK										IN 14
RF LEVEL BIT										
(SPARE)										
COUNTER COMPLETE										

DECODER DATA

ADDRESS BIT								I/O WR	I/O RD	ENABLE OUT
A0	A1	A2	A3	A4	A5	A6	A7			
0	0	0	0	1	0	0	0	↓	1	IN 10
1	0	0	0	1	0	0	0	↓	1	IN 11
0	1	0	0	1	0	0	0	↓	1	IN 12
1	1	0	0	1	0	0	0	↓	1	IN 13
0	0	1	0	1	0	0	0	↓	1	IN 14
1	0	1	0	1	0	0	0	↓	1	IN 15
0	0	0	0	1	0	0	0	1	↓	OUT 10
1	0	0	0	1	0	0	0	1	↓	OUT 11
0	1	0	0	1	0	0	0	1	↓	OUT 12
1	1	0	0	1	0	0	0	1	↓	OUT 13

Counter-I/O Board A3A3, Functional Diagram
Figure 22

TP5-4MT4-014

Revised 1 October 1978

61/62

description 523-0768882

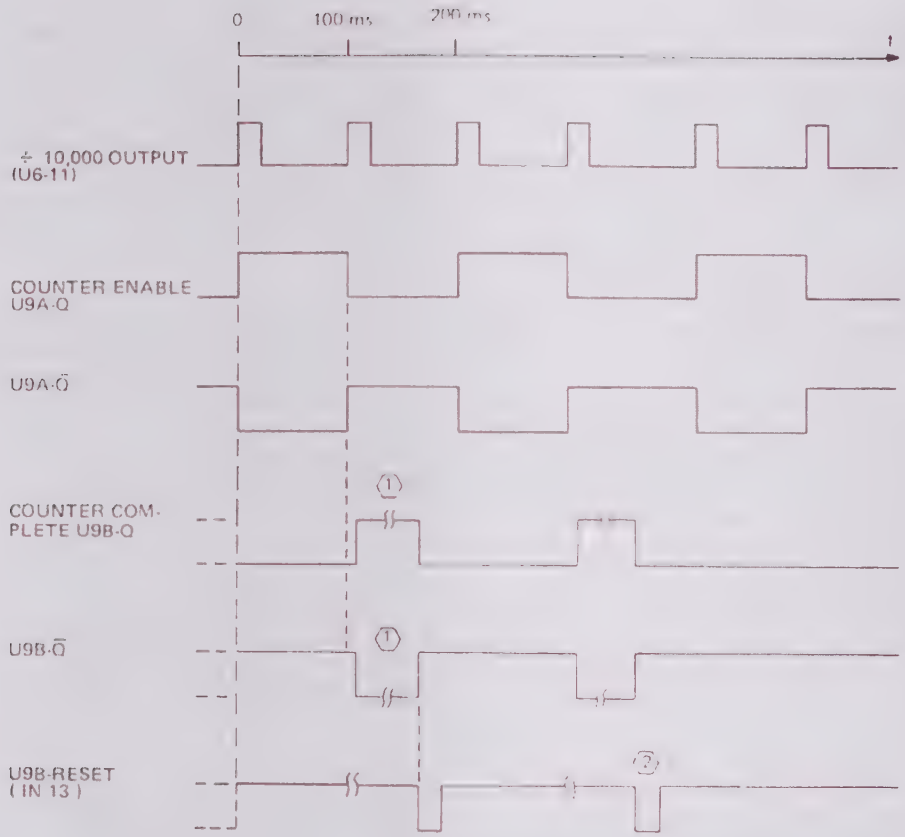

Counter Enable/Counter Complete, Timing Diagram
Figure 23

I/O bits A through D for mode selection to board A3A2, $\overline{\text{RF OFF}}$ signal when rf is shut off at the front panel, and VCXO SELECT signal to synthesizer assembly A4 when signal generator ΔF operation is required.

10.5 Synthesizer Assembly A4 (Refer to figure 21.)

10.5.1 General

Synthesizer assembly A4 uses a single phase-lock loop to generate marker beacon, VOR, localizer, glideslope and communication frequencies used by the signal generator. The rf carrier frequencies are generated in 25-kHz steps. Frequencies generated are in the following ranges:

MODE	RF CARRIER FREQUENCY RANGE (MHz)
Marker beacon	74.6 to 75.4
VOR	108.00 to 117.95
Localizer	108.10 to 111.95
Glideslope	329.15 to 335.00
COMM	118.00 to 151.975

All signals supplied to or from synthesizer assembly A4 are from or to rf modulator assembly A3.

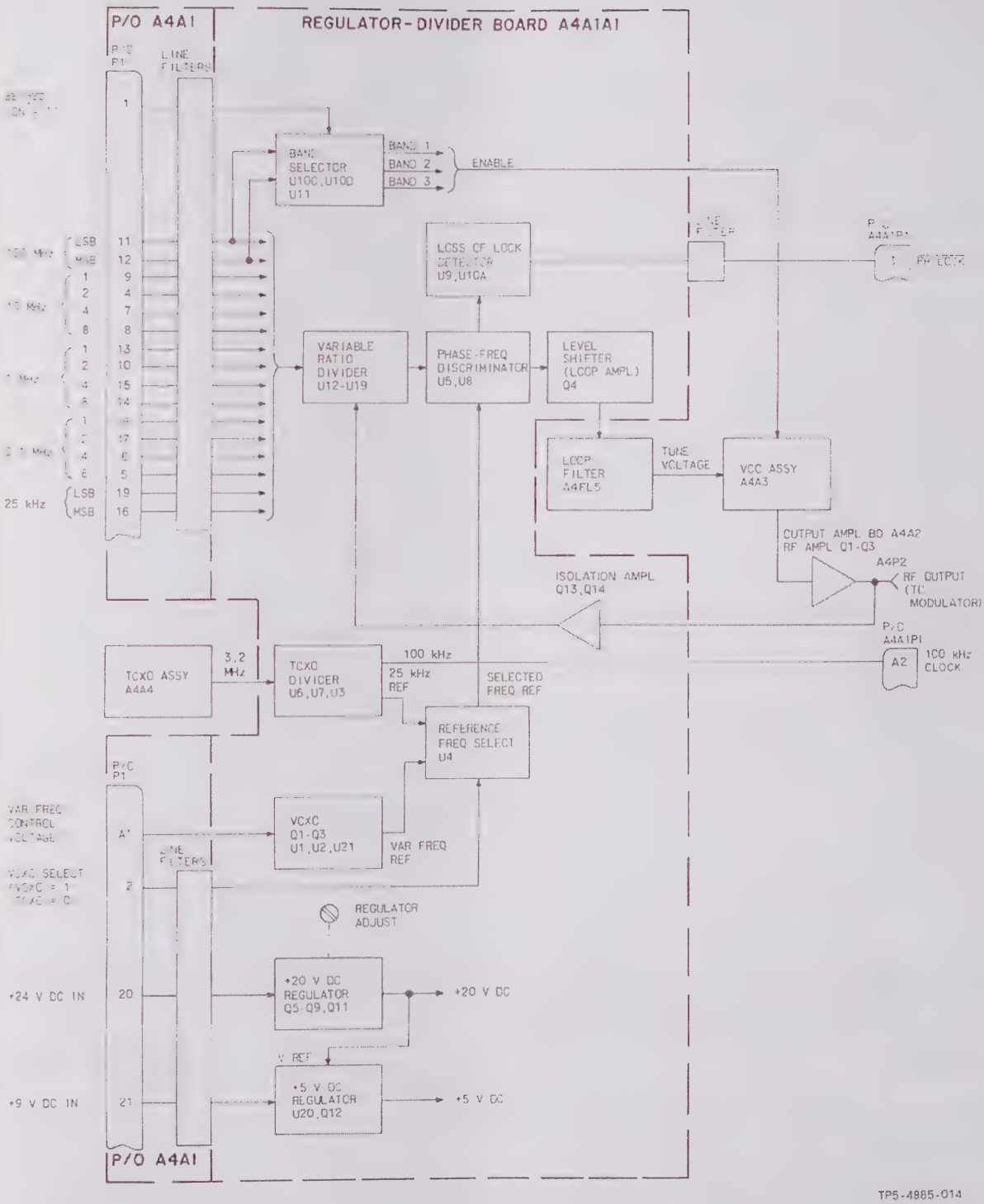

Synthesizer Assembly A4, Functional Diagram
Figure 4-4

The vco on/off signal is applied through P1-1 to the band selector circuit and enables operation of the selector circuit when the signal is a logic 1. The rf carrier frequency select control signals are supplied through P1 to the variable ratio divider circuit. Refer to figure 24 for connector pin numbers and specific control signal nomenclature. The 100-MHz LSB and MSB inputs are also supplied to the band selector circuit.

The variable ratio divider circuit is a programmable divider that uses the selected rf carrier control signals to set the division ratio. The rf output frequency from the rf output amplifier is applied through an isolation amplifier to the variable divider circuit. The rf output frequency is divided down to provide clock signals that cause the divider circuit to produce a 25-kHz output when the phase-lock loop is locked to the 25-kHz reference frequency. When the phase-lock loop is locking on the selected rf carrier frequency, variable ratio divider circuit output frequency is increased or decreased, as required, from 25 kHz to slew the phase-lock loop to the correct frequency. The nominal 25-kHz variable divider output is supplied to the phase-frequency discriminator circuit.

A TCXO circuit produces a stable 25-kHz reference frequency that is supplied to the reference frequency select circuit. A variable control voltage is applied through P1-A1 to a VCXO circuit. The control voltage varies the VCXO output so that the rf carrier frequency can be slewed up to ±0.03 percent of the selected channel frequency for performing receiver if selectivity tests. The variable frequency produced by the VCXO is supplied to the reference frequency select circuit. A frequency standard select control signal is applied through P1-2 to the reference frequency select circuit. The control signal, normally a logic 0, selects the TCXO 25-kHz reference signal. When frequency slewing is selected, the control signal is a logic 1 and the variable frequency reference signal is used. The selected reference signal is supplied to the phase-frequency discriminator circuit.

The phase-frequency discriminator compares the variable ratio divider output with the reference frequency from either the TCXO or the VCXO. When locked to the TCXO reference frequency, the output of the phase frequency discriminator is a 25-kHz pulse train whose duty cycle varies with the output frequency. The variable duty cycle is produced by the phase difference between the variable ratio divider output and the frequency reference signals. The output of the phase-frequency discriminator is applied to level shift (loop amplifier) Q4 and then to loop filter FL5. The output of the loop filter is a dc voltage proportional to the duty cycle of the 25-kHz pulse train. The vco tuning voltage is supplied to vco assembly A4A3. The phase-frequency discriminator circuit also produces signals that are supplied to the loss-of-lock detector circuit. The signals indicate whether the circuit is locking on the selected frequency

The loss-of-lock detector circuit compares signals from the phase-frequency discriminator circuit and, when loss of lock occurs, produces a loss-of-lock signal that is supplied to P1-3

The band selector circuit uses the 100-MHz LSB and MSB input logic to determine whether the frequency selected is in the marker beacon, VOR/localizer, or glideslope band. The selector supplies the correct band-enable signal to vco assembly A4A3.

Vco assembly A4A3 uses the vco tuning voltage and the band selector signals to generate the selected rf carrier frequency. Generated rf carrier frequency is applied through an rf output amplifier circuit to connector P2 and to the variable ratio divider circuit.

10.5.2 Variable Ratio Divider Circuit, P/O A4A1A1 (Refer to figure 25.)

The variable ratio divider circuit consists of three decade counters: U12, U14, and U16; two binary counters: U13 and U17; logic combiner U15; and prescaler U18, U19, Q10. The variable ratio divider compares the generated rf output frequency with the selected frequency, and produces an output frequency that is supplied to the phase-frequency discriminator. This adjusts the vco control voltage to a level that corrects the rf output frequency to the selected frequency.

Selected rf carrier frequency is supplied to the variable ratio divider circuit from rf modulator assembly A3 as 100-, 10-, 1-, and 0.1-MHz and 25-kHz logic level signals. The 100-, 10-, and 1-MHz bcd signals are supplied to decade counters U16, U12, and U14 respectively. The 0.1-MHz bcd signals are supplied to binary counters U13 and U17, and the 25-kHz binary signals are supplied to U17.

Consider a channel frequency of XXX.650 MHz. The 0.1-MHz input in bcd format is 0110. The 25-kHz input in binary format is 10 (00 kHz = 00, 25 kHz = 01, 50 kHz = 10, 75 kHz = 11). The inputs to binary

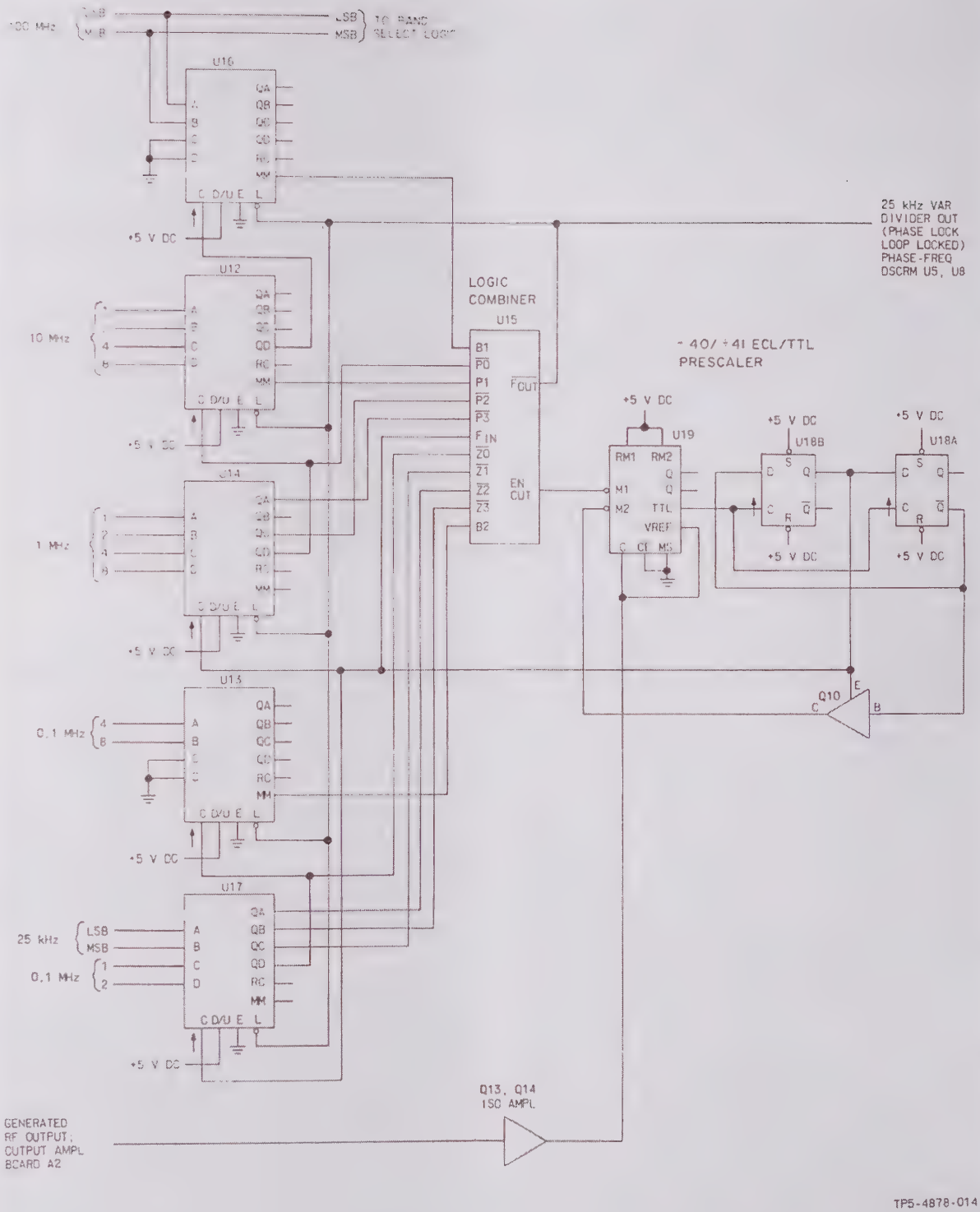

Variable Divider Circuits, Functional Diagram
Figure 25

counters U13 and U17 are as shown in the following tabulation:

COUNTER	U13				U17			
Preset inputs	D	C	B	A	D	C	B	A
Code	*	*	0	1	1	0	1	0
*Tied to ground								

Thus, 26 is loaded into the binary counters, corresponding to the number of 25-kHz increments in 0.650 MHz (26 x 25 kHz = 0.650 mHz). The maximum value required is 39 (39 x 25 kHz = 0.975 MHz) or a decimal value of 39. Therefore, inputs D and C on U13 are not required, and are grounded.

For discussion purposes, assume that the selected rf carrier frequency is 112.65 MHz (VOR mode). For 112.65 MHz, the following inputs are supplied to counters U16, U12, U11, U13, and U17:

SEL RF CARRIER FREQ (MHz)	BINARY CODE WEIGHTS				SUPPLIED TO COUNTER
	8	4	2	1	
1 (100)			0	1	Decade U16
1 (10)	0	0	0	1	Decade U12
2 (1)	0	0	1	0	Decade U14
6 (0.1)	0	1	1	0	Binary U13, U17
5 (0, 25, 50, 75 kHz)			1	0	Binary U17

When the preceding inputs are loaded into the counters at the beginning of each variable divider cycle, the variable ratio divider is set to a division ratio of 4506. The division ratio causes the variable ratio divider circuit to produce one output pulse for each 4506 rf output cycles. With the synthesizer locked on frequency and the divider ratio set to 4506, the variable ratio divider circuit produces a 25-kHz output signal when the rf output signal is 112.65 MHz. The division ratio can be calculated using the following formula:

$$\text{Division ratio} = 4000N_1 + 400N_2 + 40N_3 + 4N_4 + N_5$$

Where

N_1 = 100-MHz selected input

N_2 = 10-MHz selected input

N_3 = 1-MHz selected input

N_4 = 0.1-MHz selected input

N_5 = 25-kHz selected input (0 kHz = 0, 25 kHz = 1, 50 kHz = 2, 75 kHz = 3)

For example, substituting the selected rf carrier frequency of 112.65 MHz:

$$4506 = (4000 \times 1) + (400 \times 1) + (40 \times 2) + (4 \times 6) + 2$$

At the start of each variable divider circuit cycle, a logic 0 from the F_{OUT} terminal on U15 is supplied to the load (L) inputs of counters U16, U12, U11, U13, and U17. The bcd and binary signals for the selected rf carrier frequency are loaded in the counters and a logic 0 minimum maximum (MM) signal from U13 is supplied to B2 of U15 and a logic 0 MM signal from U16 is supplied to B1 of U15. The logic 0 MM signal inhibits the zero detector circuits on U15 (Z0 through Z3) and the programmed input circuits (P0 through P3). With Z0 through Z3 inhibited, a logic 0 is applied from EN_{OUT} on U15 to the mode 1 (M1) input of prescaler U19 and the F_{OUT} signal is a logic 1. The prescaler circuit consists of prescaler U19, flip-flops U18A and U18B, and switch Q10. The circuit configuration causes one output pulse to be produced for every 41 input cycles of the generated rf output signal when mode 1 is selected, or one output pulse for every 40 input cycles when mode 2 is selected.

The generated rf output signal from output amplifier board A2 is applied through isolation amplifier Q13, Q14 to the clock and V_{REF} inputs of U19. With a logic 0 supplied to M1 of U15, the prescaler circuit is set to divide by 41 and, with a 112.65-MHz frequency generated, produces a 2747.561-kHz clock signal that is supplied to counters U14 and U17 and to logic combiner U15.

Counters U13 and U17 are cascaded, with the outputs from U17 supplied to the zero detector inputs (Z0

through Z3) of U15. Counters U16, U12, and U14 are cascaded, with the outputs of U14 supplied to program inputs (P0, P2, and P3) of U15, and the MM output of U12 supplied to P1 of U15. All counters are set to count down from the programmed (selected rf carrier) input. Therefore, counters U13 and U17 are counted down from 26 and counters U16, U12, and U14 are counted down from 112.

When counter U13 is counted down to zero, the MM output switches to a logic 1. With a logic 1 supplied to the B2 input of U15, the zero detector circuits are enabled and the logic 0 inputs to Z0 through Z3 switches EN_{OUT} to a logic 1. The logic 1 supplied to the M1 input of U19 switches the prescaler circuit to divide by 40 for the remainder of the variable divider circuit cycle, causing the prescaler to produce a 2816.25-kHz clock signal for the counters and logic combiner.

Three counter outputs from decade counter U14 and the MM output from decade counter U12 are supplied to the programmed (P0 through P3) inputs of U15. The MM output from decade counter U16 is supplied to the B1 input of U15. When U16 counts down to zero, the MM output switches to a logic 1 and the logic 1 input to B1 of U15 enables the programmed circuits in U15 to accept the P0 through P3 inputs. Toggle condition for the P( ) inputs of U15 occurs with U12 and U16 outputs all in zero state and U14 output at the 2 count. With logic 0 at the P0, P2, and P3 inputs and logic 1 at the P1 input, a negative pulse is produced at the F_{OUT} output of U15 after two additional clock pulses occur. The F_{OUT} output of U15 is supplied to the load inputs, the counters, and the phase-frequency discriminator circuit.

When the generated rf output frequency is the same as the selected rf carrier frequency, the phase-lock loop is locked and U15 produces a $\overline{F_{OUT}}$ pulse for every 4506 cycles of the generated rf output frequency, or a 25-kHz signal. For a locked condition, the width of the negative $\overline{F_{OUT}}$ pulse = $\frac{40}{f}$ microseconds, where f is the rf output frequency in MHz.

During lock-on, if the generated rf output frequency is above or below the selected rf carrier frequency, the variable divider still divides by a ratio determined by the selected rf carrier frequency. This causes a phase shift in the 25-kHz signal produced by U15, which in turn changes the vco control voltage produced by the phase-frequency discriminator circuit. This continues until the phase-lock loop is generating the selected rf carrier frequency.

10.5.3 VCXO and TCXO Circuits (Refer to figure 26.)

The VCXO and TCXO circuits generate the reference frequencies used by the phase-frequency discriminator circuit. The VCXO is used only when the selected rf carrier frequency is varied about the selected channel frequency when performing receiver selectivity tests. The TCXO supplies the 25-kHz reference frequency during normal signal generator operation.

10.5.3.1 VCXO Circuit

A variable frequency control voltage (dc) from rf modulator assembly A3 is applied through P1A1 to frequency range adjust circuit R7, R8. Resistor R8 is selected during alignment/adjustment procedures to set the minimum and maximum operating range for the VCXO. The control voltage is applied from R7, R8 to crystal oscillator CR1, CR2, CR3, Q1 that generates a nominal 16.0-MHz signal. The VCXO output frequency is varied with the control voltage by changing the capacitance produced by varactors CR1, CR2, and CR3.

The nominal 16.0-MHz signal is applied through amplifier Q2 and level translator Q3 to divide-by-4 counter U21. Counter U21 produces a nominal 4-MHz signal that is supplied to binary counter U1, which functions as a divide-by-16 counter and produces a nominal 250-kHz signal that is supplied to decade counter U2. Counter U2 produces a nominal 25-kHz signal that is supplied to U4D in reference frequency logic circuit U4. The 25-kHz reference frequency that is being varied is multiplied by the fixed channel divider ratio. The rf channel frequency is produced only when the reference frequency is exactly 25 kHz.

As the input control voltage is varied, the oscillator frequency is varied from the nominal and all other frequencies are varied proportionally.

10.5.3.2 TCXO Circuit

The TCXO circuit produces the 25-kHz reference frequency for the phase-frequency discriminator circuit during standard 479S-6A operation.

The TCXO assembly A4A4 produces a continuous 3.2-MHz signal that is supplied to divide-by-16 counter U7. Counter U16 produces a 200-kHz signal that is supplied to divide-by-2/divide-by-8 counter U6. Counter U6 produces a 25-kHz reference frequency

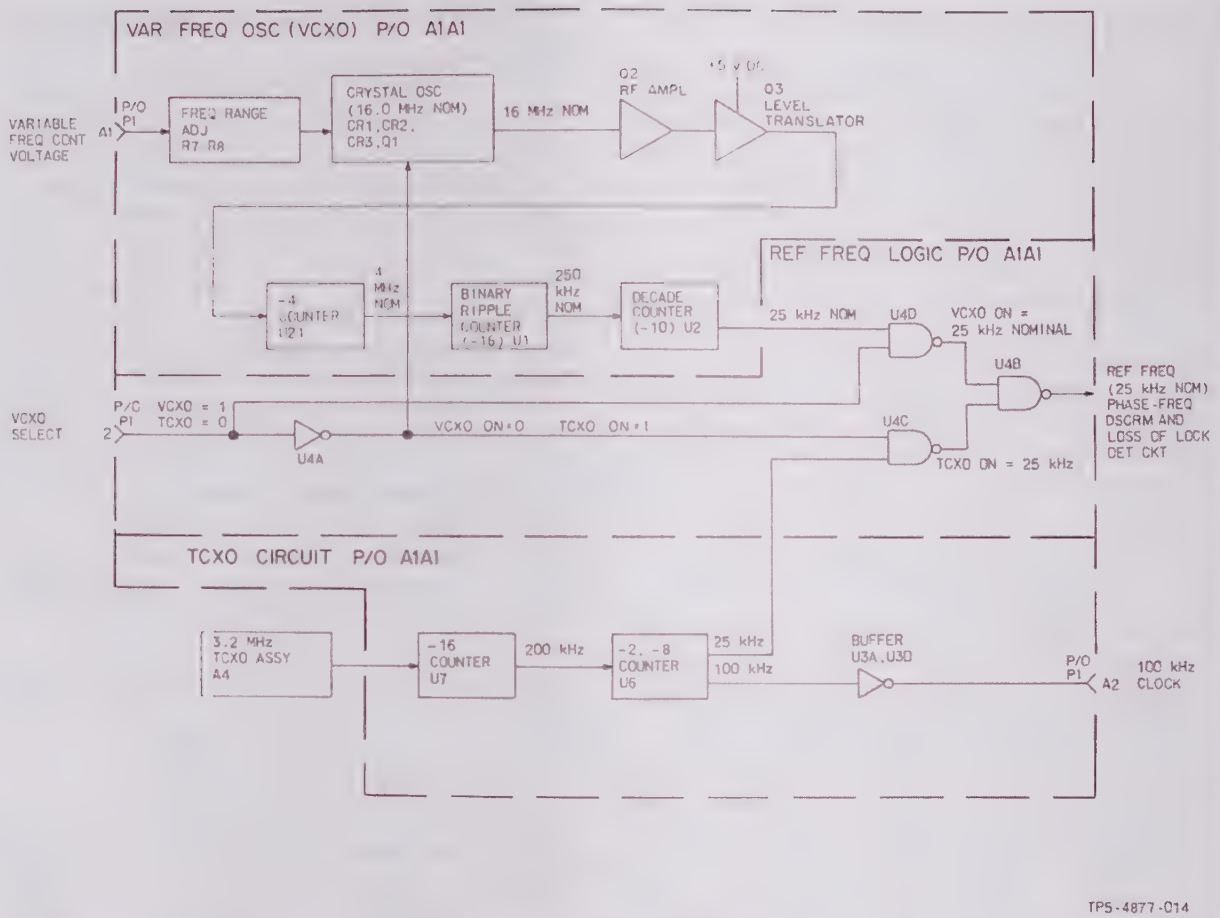

TP5-4877-014

VCXO/TCXO Circuit, Functional Diagram
Figure 26

that is supplied to U4C in the reference frequency logic circuit and a 100-kHz signal that is applied through buffer U3A, U3D to P1A2.

10.5.3.3 Reference Frequency Logic Circuit

The reference frequency logic circuit is controlled by a VCXO SELECT signal from rf modulator assembly A3 and determines whether the VCXO or TCXO reference signal is to be used by the phase-frequency discriminator circuit. When the VCXO is used during the ΔF operation of the 479S-6A, a logic 1 VCXO SELECT signal is applied through P1-2 to U4D and through inverter U4A to U4C and to the crystal oscillator in the VCXO. The logic 0 supplied to the crystal oscillator enables the oscillator. The logic 0 supplied to U4C inhibits the TCXO output to U4B. The logic 1 supplied to U4D enables the VCXO frequency to be applied through gate U4B to the phase-frequency circuit as the reference frequency.

When the TCXO is selected, the frequency standard select signal is a logic 0 that is supplied to U4D and, through U4A, to U4C and the VCXO oscillator. The output of U4A inhibits the VCXO oscillator and enables gate U4C. The logic 0 supplied to U4D inhibits the VCXO output to U4B. The 25-kHz reference frequency from the TCXO is applied through U4C and U4B to the phase-frequency discriminator as the reference frequency.

10.5.3.4 Phase-Frequency Discriminator Circuit

The phase-frequency discriminator circuit compares the reference frequency with the variable divider output frequency and phase and converts the difference to a vco dc control voltage. The circuit consists of two major functional circuits: a phase-frequency discriminator circuit, and a level shifter (loop amplifier) circuit.

10.5.4 Phase-Frequency Discriminator Circuit (Refer to figure 27.)

The phase-frequency discriminator circuit compares the output from the variable divider circuit with a 25-kHz reference frequency. When the frequency and phase of the variable ratio divider output remain constant, the discriminator circuit produces a rectangular wave. The duty cycle of the wave is used to produce a vco control voltage by determining the average dc voltage of the discriminator circuit output wave.

The nominal 25-kHz VCXO or TCXO reference frequency is supplied to the clock input of U8B and the variable ratio divider output frequency is supplied to the clock input of U8A. For operation of the discriminator circuit, refer to the timing diagram shown in figure 28.

10.5.5 Level Shifter (Loop Amplifier) Circuit (Refer to figure 27.)

The rectangular wave from the phase-frequency discriminator circuit is applied to loop amplifier Q4. The output of Q4 is applied through connector P3 to low-pass filter assembly A4A5. Resistor R22 with the internal capacitance of FL5 form an integrator that converts the rectangular wave to a sawtooth wave at the input to FL5. Low-pass filter FL5 converts the sawtooth wave to a dc tuning voltage that is equal to the average dc level of the sawtooth wave. Therefore, the tuning voltage depends on the duty cycle produced by the discriminator circuit. When the phase-lock loop is locked, the duty cycle remains constant and the tuning voltage is steady.

10.5.6 Loss-of-Lock Detector Circuit (Refer to figure 27.)

The loss-of-lock detector circuit determines whether the phase-lock loop is locked on the selected rf carrier frequency.

The VCXO or TCXO reference frequency and the variable divider output frequency are supplied to the clock inputs of U9A and U9B respectively. The two rectangular wave signals from the phase-frequency discriminator are supplied to the data inputs of U9A and U9B. When the phase-lock loop is locked on the selected rf carrier frequency, U9A and U9B produce logic 0 signals that are supplied to gate U10A. Gate U10A produces a logic 1 lock signal that is supplied to P1-3.

When the phase-lock loop is not locked, the rectangular wave signals from the phase-frequency circuit are not uniform and cause U9A and U9B to produce outputs that are 180 degrees out of phase, which cause U10A to produce a logic 0 loss-of-lock signal.

10.5.7 Band Selector Circuit (Refer to figure 27.)

The band selector circuit determines whether the selected rf carrier frequency is in the marker beacon, VOR/localizer, or glideslope frequency ranges and supplies vco control signals to vco assembly A4A3. Refer to figure 27 for circuit operation.

10.5.8 VCO Assembly A4A3 (Refer to figure 27.)

The vco assembly uses the control voltage from the loop filter and the band control signals from the band selector circuits to generate the selected rf carrier frequency. Resistors R3, R4, and R5 are selected during alignment/adjustment procedures to set oscillator output levels. The oscillator is capable of producing required marker beacon frequencies from 74.6 to 75.4 MHz, the required VOR/localizer frequencies from 108.00 to 117.95 MHz, and the required glideslope frequencies from 329.15 to 335.00 MHz. Each band has an independent output level determined by R3, R4, and R5 values.

Vco assembly A4A3 is a nonrepairable potted assembly.

10.5.9 RF Output Amplifier Circuit (Refer to figure 29.)

The rf output amplifier circuit (CPN 629-9760-001) consists of two broadband isolation rf amplifiers that produce the required gain for the rf carrier signal. The 74.6- to 335.0-MHz vco output signal is applied through amplifiers Q3 and Q1 to connector P2 and to the variable divider circuit. Q2 provides gain stability by varying the base current supplied to Q1 as a function of temperature. Variable capacitors C4, C12, and C14 are adjusted during alignment/adjustment procedures to ensure flatness across the operating band.

The rf amplifier circuit (CPN 634-9681-001) consists of two broadband isolation rf amplifiers that produce the required gain for the rf carrier signal. The 74.6 to 335.0 MHz vco output signal is applied through amplifiers Q1 and Q3 to connector P2 and to the variable divider circuit. Q2 provides gain stability by varying the base current supplied to Q3 as a function of temperature. Variable capacitors C1, C2, C10, and C11 are adjusted during alignment procedures to ensure flatness across the operating band.

10.5.10 +5- and +20-V DC Voltage Regulators

The +5- and +20-V dc voltage regulators convert the +9- and +24-V dc input voltages to a regulated +5 and +20 V dc respectively. The +20 V dc provides operating voltage for analog circuit operation, and the +5 V dc provides operating voltage for digital circuit

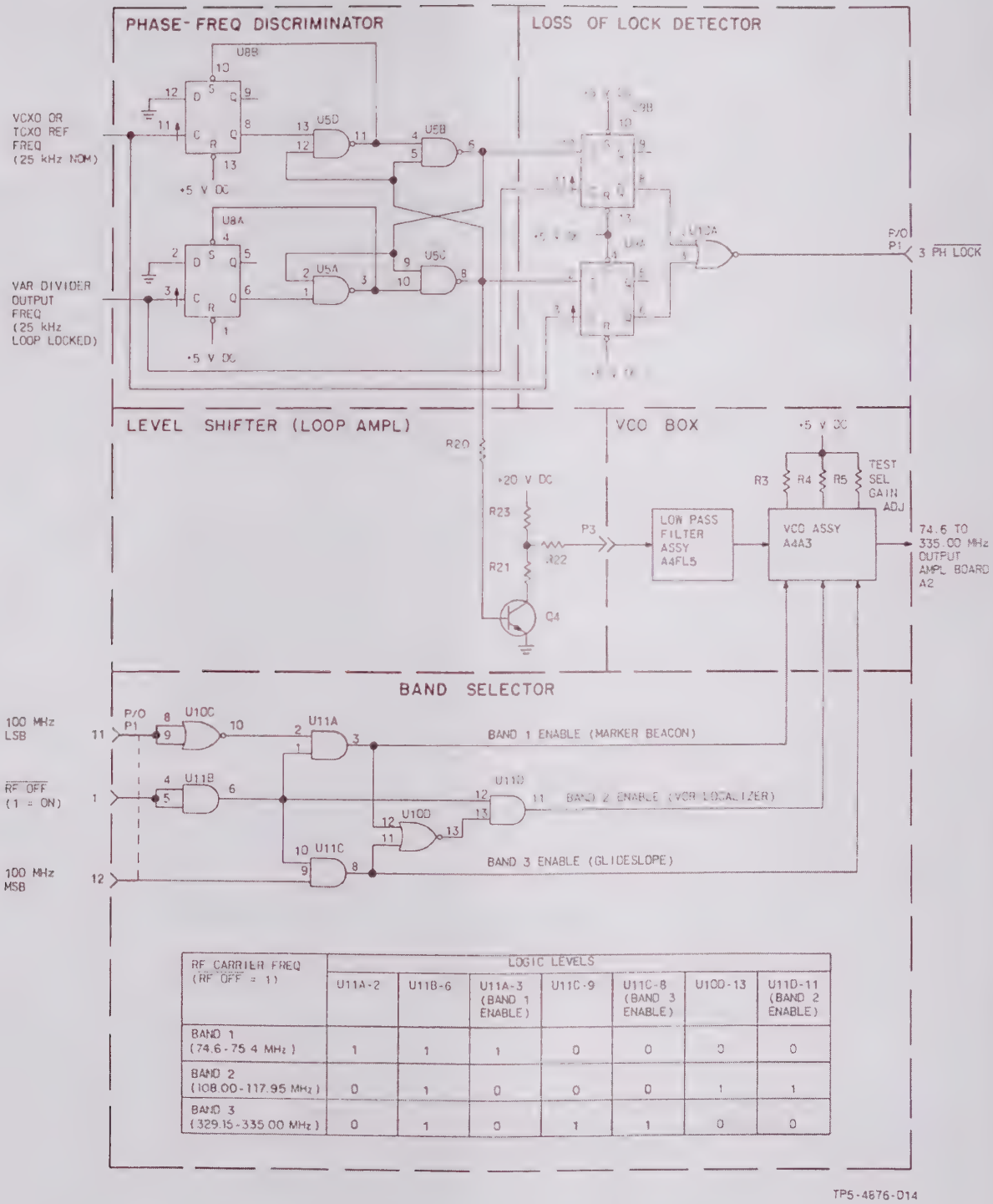

RF CARRIER FREQ (RF OFF = 1)	LOGIC LEVELS						
	U11A-2	U11B-6	U11A-3 (BAND 1 ENABLE)	U11C-9	U11C-8 (BAND 3 ENABLE)	U10D-13	U11D-11 (BAND 2 ENABLE)
BAND 1 (74.6-75.4 MHz)	1	1	1	0	0	0	0
BAND 2 (108.00-117.95 MHz)	0	1	0	0	0	1	1
BAND 3 (329.15-335.00 MHz)	0	1	0	1	1	0	0

Phase-Frequency Detector Circuit, Functional Diagram
Figure 27

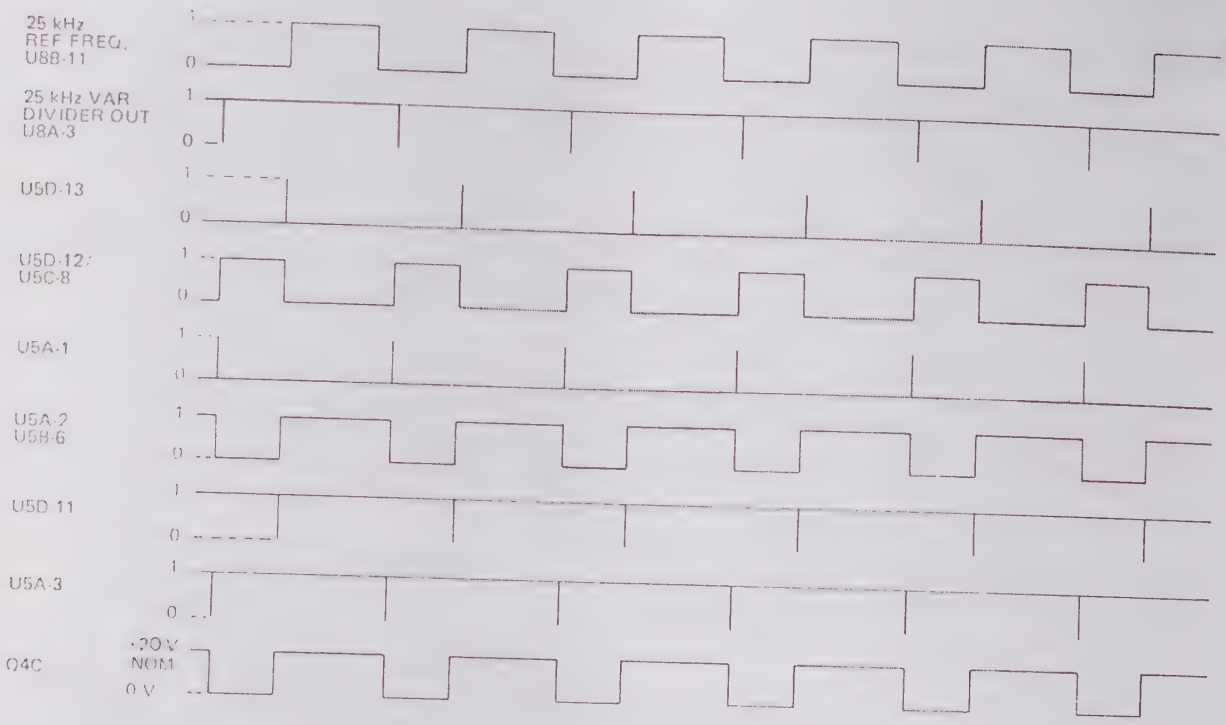

NOTE:

(1) WAVEFORMS SHOWN ARE IDEALIZED.

TP5-4884-011

Phase-Frequency Detector, Timing Diagram
Figure 28

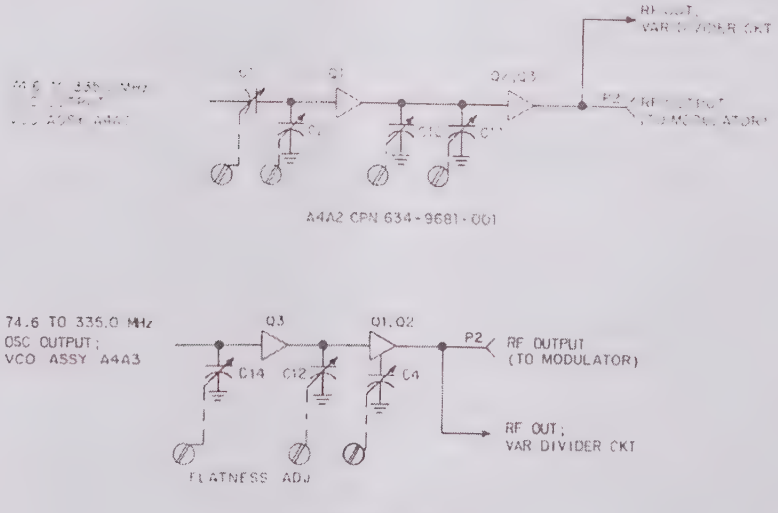

TP5-4881-013

RF Output Amplifier (P/O A3A2), Functional Diagram
Figure 29

operation. The regulated +20-V dc supply also furnishes the reference voltage for the +5-V dc regulator. The voltage regulator adjustment is set during alignment/adjustment procedures to provide +5 and +20 V dc within the required tolerances.

10.6 Power Supply Assembly A5 (Refer to figure 30.)

Power supply assembly A5 is factory wired to operate on 115 V ac, 50 or 60 Hz. The power supply can be rewired to operate on 230 V ac, 50/60 Hz by changing wiring connections on a barrier strip. Changing the barrier strip wiring connections changes the input to the primary winding of transformer T1. For detailed information on changing wire connections for 230-V ac operation, refer to the maintenance section. Connectors and connector pins are omitted from figure 30 to clarify discussion of A5. If connector information is required, refer to the schematic diagram for power supply assembly A5 contained in the diagrams section.

The 115/230-V ac, 50/60-Hz input power is applied through emi filter C4, C5, C6, C7, L1, L2 to the POWER switch on front panel assembly A1. When the POWER switch is ON (depressed), 115/230 V ac is applied through fuse F1 to the barrier strip. The input power is applied from the barrier strip to transformer T1 and to fan B1. Transformer T1 converts the 115/230 V ac to a nominal 24-V ac output, two nominal 15-V ac outputs, and a nominal 9-V ac output.

The nominal 24 V ac from transformer T1 is supplied to rectifier/filter A5A1C2, CR2 which converts the ac voltage to an unregulated +33 V dc. The +33 V dc is applied to regulator A5A2U4, C16, C17 that converts the unregulated dc voltage to a regulated +24 V dc. The +24 V dc is supplied to the internal signal generator circuits.

One of the nominal 15-V ac outputs from T1 is supplied to rectifier/filter A5A1C1, CR1 that converts the ac voltage to an unregulated -21 V dc. The unregulated -21 V dc is supplied to regulator A5A2U5, C12, C13 that converts the unregulated dc voltage to a regulated -15 V dc. The -15 V dc is supplied to the internal signal generator circuits.

The second nominal 15-V ac output from T1 is applied through rectifier A5A1CR5, CR6 and filter C1 to series regulator A5A4Q2, VR1, VR2; regulator A5A2U3, C14, C15; and series regulator A5A2U2, Q4. The 15-V ac output is also applied to fuses F2 and F3. The fused output is applied to backplane A7, where it provides power to store/recall board A9. The rectifier and filter converts the ac voltage to an unregulated +21 V dc. Series regulator A5A4Q2, VR1, VR2 converts the unregulated voltage to a regulated +12 V dc that is applied through filter C3, C5 to the signal generator circuits. Regulator A5A2U3, C14, C15 converts the unregulated voltage to a +15 V dc that is supplied to the signal generator circuits. Series regulator A5A2U2, Q4 converts the unregulated voltage to a regulated +9 V dc that is applied through current limit sensor A5A2R21 and filter A5A2C10 to the signal generator circuits. The current limit sensor resistor controls output current limiting protection for the +9-V dc regulator circuitry. Resistors A5A2R19 and R18 form a voltage divider that controls the regulator output voltage.

The nominal 9-V ac output from T1 is applied through rectifier A5A1CR3, CR4; fuse A5A1F1; and filter C2, C3 to series regulator transistors A5A4Q1, A5A3Q1, A5A3Q2. The rectifier and filter circuits convert the ac voltage to an unregulated +13 V dc. The regulator transistors operate in conjunction with regulator A5A2U1 to form a series regulator that converts the unregulated voltage to a regulated +5 V dc. The regulated +5 V dc is applied through current equalizer resistors A5A2R9, R11, R13; current limit sensor resistors A5A2R10, R12, R14, R15, R17, R20, R22, R23, R25; crowbar circuit A5A2Q1, VR1; and filter A5A2C4, C6, C7 to the signal generator circuits. Regulator A5A2U1 is biased by the unregulated +21 V dc. A5A2U1 supplies a control voltage to transistors A5A4Q1, Q2, Q3. The current equalizer resistors balance the current passed through each series regulator transistor. The current limit sensor resistors allow foldback current limiting protection for the +5-V dc regulator circuitry. The output voltage is controlled by potentiometer A5A2R2 and resistors A5A2R5, R4. The crowbar circuit monitors the regulator voltage output and when the voltage exceeds specific limits, the +5 V dc is removed from the signal generator logic circuits to prevent damage to the logic devices. The crowbar circuit is adjusted by A5A2R1 to set the voltage limit.

10.7 Remote Tune Board A8

CPU address and data bus information are supplied to remote tune board A8. Addresses are decoded and used to control data input to storage latches. Data supplied is used to drive relays which close appropriate contacts to provide 2-out-of-5 tuning that conforms with ARINC Specification 410, mode discretes, and normal control-head contact closures for NAV disable, LOC/GS energize, and COM disable.

10.7.1 Overall Operation (Refer to figure 31.)

Address decoders U1 and U2 are supplied with address lines A0 through A7 plus $\overline{\text{I/O WR}}$. Depending on status of address bits A0, A1, and A2, one of the latches (U3, U5, U7, U9, or U11) will be clocked when the $\overline{\text{I/O WR}}$ pulse is received. Data bus information will then be output to appropriate relay driver U4, U6, U8, U10, or U12. Latches clocked for combinations of address lines are shown in the following tabulation:

LATCH	ADDRESS LINE							
	A7	A6	A5	A4	A3	A2	A1	A0
U9	1	0	0	0	0	0	0	0
U3	1	0	0	0	0	0	0	1
U7	1	0	0	0	0	0	1	0
U5	1	0	0	0	0	0	1	1
U11	1	0	0	0	0	1	0	0

A high logic input to the relay drivers will cause a low output, which provides a return for relay power and closes the relay.

For the 2-of-5 10-MHz, 1-MHz, 0.1-MHz, and 0.01-MHz digits, two of the five latch outputs that correspond to data bits D0 through D4 will be at a high logic level and the appropriate relays will be closed. Closing the relays shorts the appropriate frequency tuning line to frequency common. This provides frequency tuning information to the using receiver. Data bit D5 is used to control 0.005-MHz signals B and C. The 0.001-MHz frequency digit is controlled by the 0.005-MHz B and C signals in the following manner:

0.005-MHz B	0.005-MHz C	0.001-MHz DIGIT
Relay closed	Relay open	0
Relay open	Relay closed	5

When ΔF is activated, the 2-of-5 turning data corresponds to that of the last channel frequency the operator selected prior to pushing ΔF. Data bits D0 through D4 provide the following control signals: mode select A, NAV disable, LOC/GS energize, mode select B, and COM disable. D5 controls the timing trigger output, causing it to be low if D5 is high, and vice versa.

LOC/GS energize is grounded when a localizer or glideslope frequency is selected from the front panel. When a glideslope frequency is selected, the paired localizer tuning data automatically appears at the remote tune output.

NAV disable is grounded when the frequency is outside the 108.0- through 117.95-MHz band, and COM disable is grounded when the frequency is inside this band.

The timing trigger is a TTL level positive 7 to 13-microsecond pulse, coincident with any keystroke.

Mode select A and B signals are provided to control antenna switching relays. Receivers being tested normally have different antenna ports for the different frequency ranges being tested. These signals provide the capability to control rf relays to automatically connect the signal generator output to the proper antenna port for the mode selected.

10.8 Store/Recall Board A9

10.8.1 General

Store/recall board A9 provides the capability for storage of signal generator conditions and for recall of those conditions at any time.

10.8.2 Overall Operation (Refer to figure 32.)

CPU address bus information is supplied to port decoder U8B and control decode circuit U5B. I/O read and write signals are also input to the control decode circuits. The four MSB of address, AB4 through AB7, must be high or data cannot be transferred through the data buffers.

When AB4 through AB7 are high and the I/O write signal goes low, port decoder U8B decodes AB0 and AB1 to provide clock signals for data registers U12, U13, and U16. U8B also outputs a control signal to WE control circuits (U3C, U11D, U11F). The control decode output that enables U8B also causes U24 to output a wait signal to the CPU and enables data buffers U19, U20, and U21 to allow data from the CPU data bus onto the A9 board. The storage memories (U6, U22, U2, U23, U9, U18) will not accept data until they are chip enabled.

When AB4 through AB7 are high and the I/O read signal goes low, the data buffers allow data from the A9 board onto the CPU data bus. An I/O read also triggers U24 to output a wait signal to the CPU,

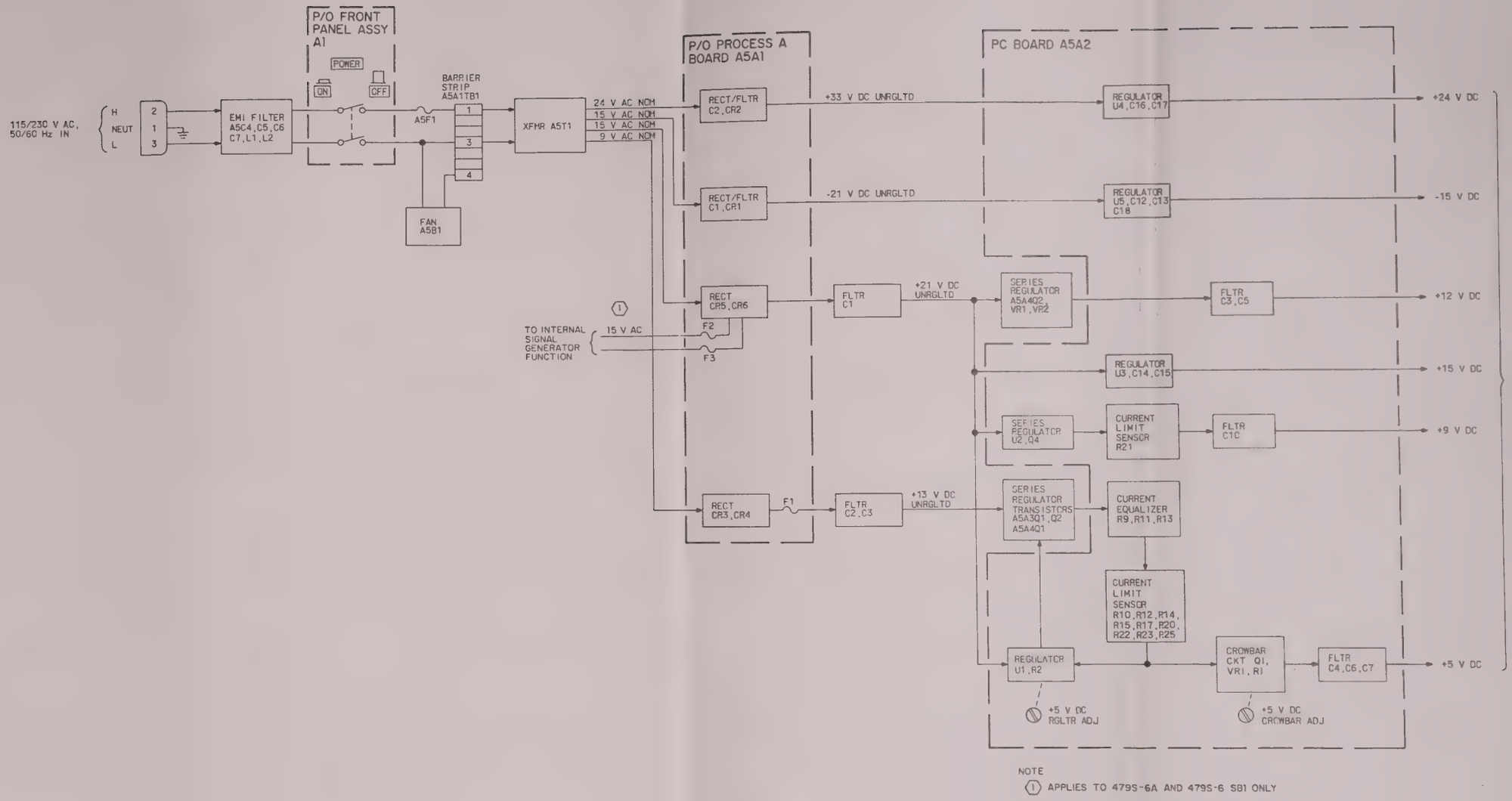

NOTE

1 APPLIES TO 479S-6A AND 479S-6 SB1 ONLY

TP5-4875-C14

Power Supply A5, Functional Diagram
Figure 30

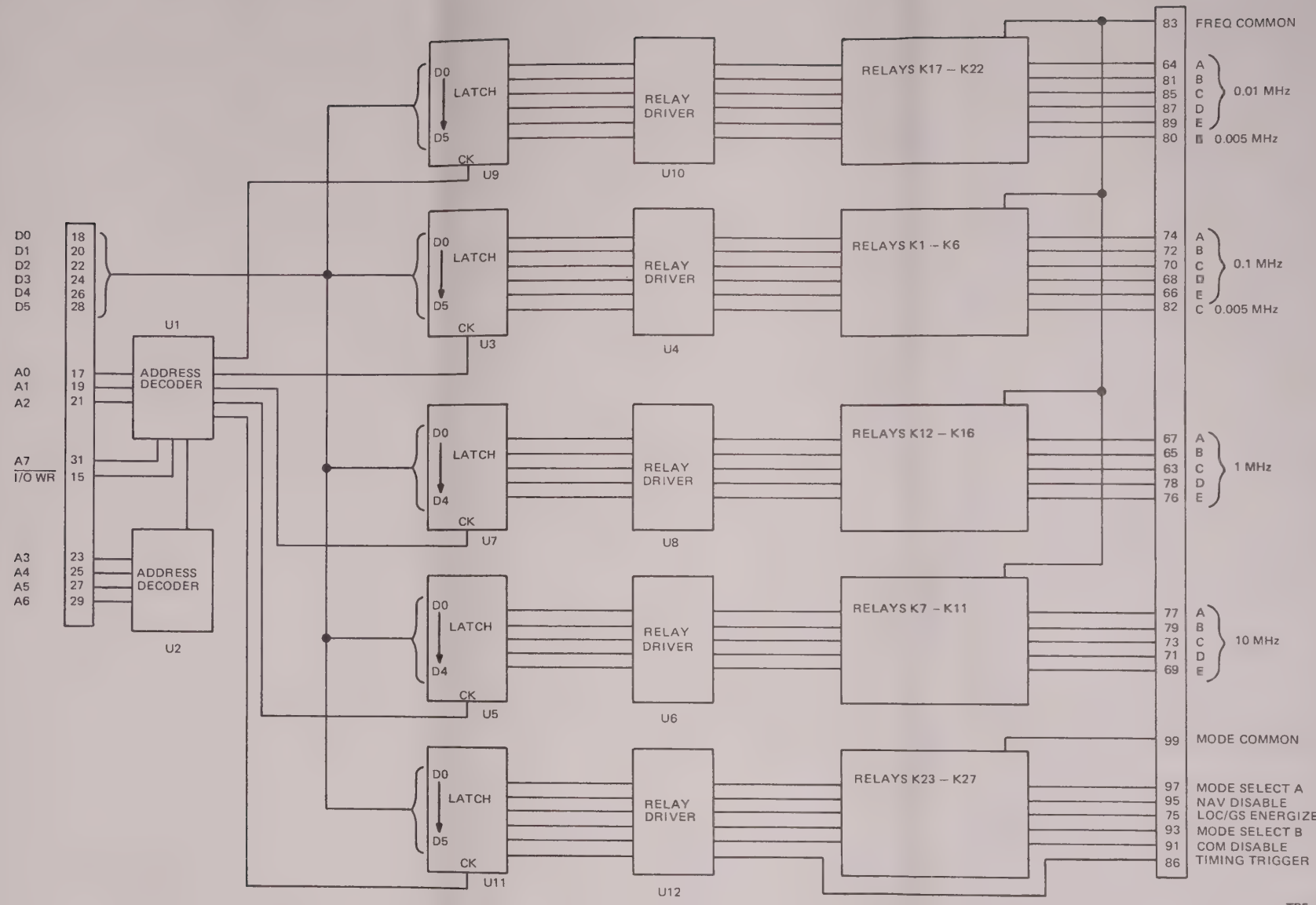

Remote Tune Board A8, Functional Diagram
Figure 31

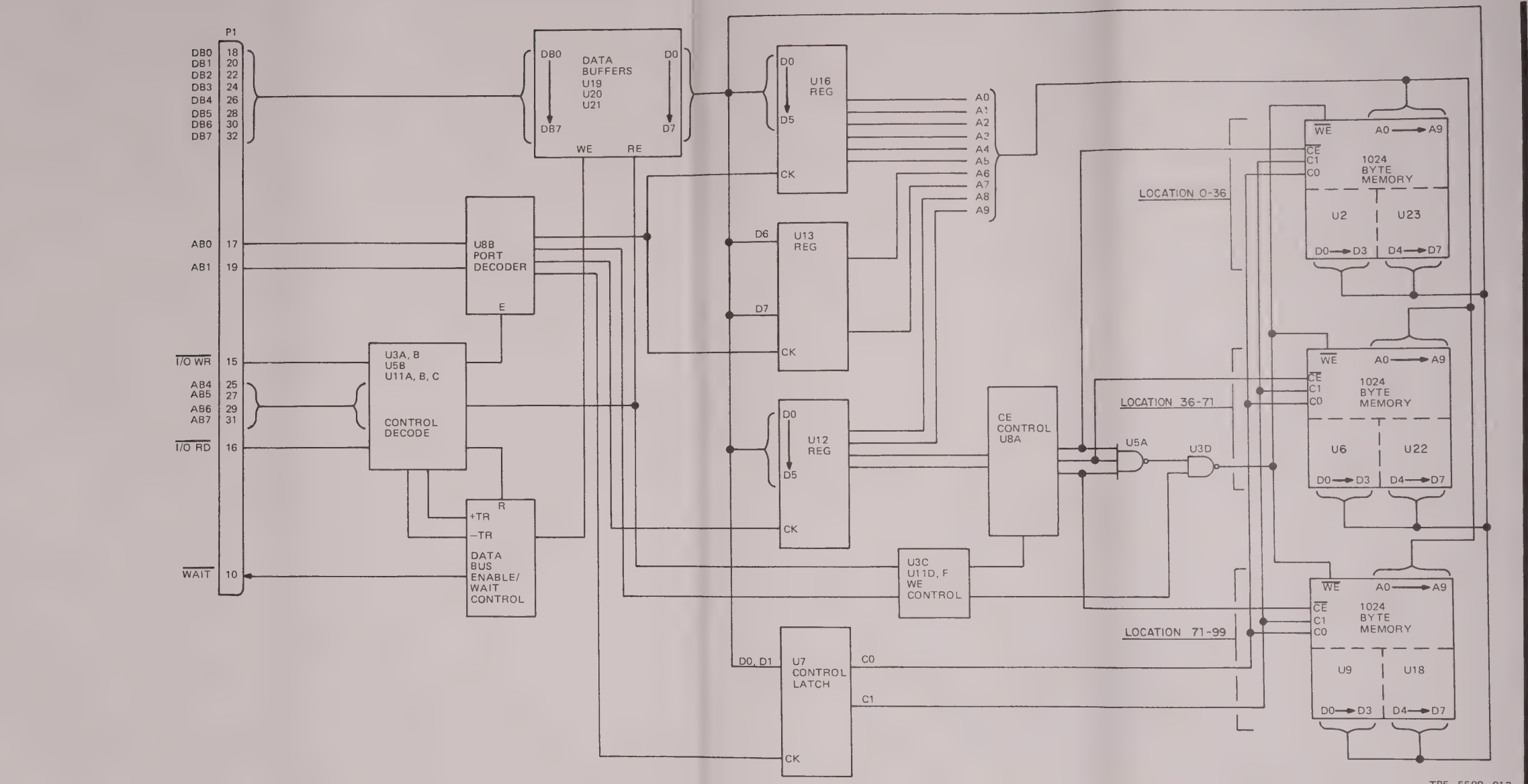

Store/Recall Board A9, Functional Diagram
Figure 32

which holds data on the data bus long enough for the storage memories to respond. The CPU is programmed to output an I/O write with an I/O read to the store/recall board to latch a memory address into registers U16, U13, and U12. Once the address is latched, C0 and C1 must be latched in read mode (table 8 shows memory mode control inputs) and chip enable, $\overline{CE}$, must be active to allow the memory mode to take place.

Table 8. Memory Mode Control.

CONTROL BIT		MEMORY MODE
C0	C1	
0	0	Read mode
1	0	Write mode
1	1	Word erase mode

Control latch U7 has data bits D0 and D1 as control inputs and is clocked by output of address enable/memory mode control U8B.

Chip enable control U8A outputs determine which pair of memories are enabled to receive or output data. U8A is enabled by an output from write enable control U11D. Outputs from register U12 determine which memories are enabled. These U12 outputs are a result of the status of D2 and D3. When both I/O read and I/O write are inactive, the chip enable control is disabled and no memory is available to the data bus.

When I/O write is low, the output of write enable chip U11F is high, which enables U3 and causes $\overline{WE}$ to be held off until $\overline{CE}$ goes low. This allows data to be entered into addressed memory if memory is in write mode (table 8).

Refer to schematic diagrams for the following information.

The power-up clear circuit (CR3, R6, C4) holds pins 1 and 13 on U7 low until the power-up sequence is complete. This ensures that C1 and C0 are always in the read mode and keeps the data in the memories from being inadvertently destroyed.

The power-up sequence involves delaying the -30 volts by holding Q4 off until C13 charges negative through R12 to approximately -10.6 volts.

The power-down sequence of the -30 volts is accomplished when C10 discharges to approximately -10 volts.

CR4 through CR12, C8, Q2, Q3, Q4, and U15 provide the -30-V dc operating power for the 1024 byte memories. Zener diodes CR4 and CR5 provide overvoltage protection to prevent damage to the memories. CR6 prevents reverse charging of voltage doubler capacitor C8.

The sequence to store or recall 1 byte is as follows:

Store

a. Latch lowest 8 address bits.
b. Latch highest 6 address bits.
c. C1, C0 latched to 1, 1.
d. Data byte latched in steps a, b is erased.
e. Delay 10 to 20 milliseconds by software.
f. C1, C0 latched to 0,0.
g. Data byte erase terminated.
h. C1, C0 latched to 0, 1.
i. Data byte written into memory.
j. Delay 1 to 2 milliseconds by software.
k. C1, C0 latched to 0,0.
l. Data byte write terminated.

Recall

a. C1, C0 latched to 0,0.
b. Latch lowest 8 bits of address.
c. Latch highest 6 bits of address.
d. Data byte latched in steps a, b is read.

10.9 IEEE-488/1978 Bus Interface Board A10

10.9.1 General

IEEE-488/1978 bus interface board A10 makes the signal generator capable of communicating with external control devices.

A description of basic bus operation is given in paragraph 10.9.2. Overall operation for A10, CPN 601-5883-001 is given in paragraph 10.9.3, and A10, CPN 601-2309-001 in paragraph 10.9.4.

10.9.2 IEEE-488/1978 Bus Operation

The following terms are used in this paragraph.

Talker - sends device dependent data to the bus.
Listener - receives device dependent data on the bus.
Controller - manages the bus. A controller is the only device that may send GPIB bus commands on the bus and thus determines what devices may be talkers and listeners on the bus. It is also the only device that may activate the ATN, RON, and IFC bus management lines described later in this paragraph.

The GPIB bus consists of 16 lines: 8 data lines, 3 handshake lines, and 5 control and status lines. The function of these lines is described below.

a. Data lines: DI01 through DI08

Data lines are used for transferring bus commands and device dependent data in a bit-parallel, byte-serial fashion. With the 479S-6A, the 7-bit ASCII code is used.

b. Handshake lines: DAV - data valid, NRFD - not ready for data, NDAC - not data accepted.

Handshake lines provide for the transfer of commands and data on the data lines between devices. The talker activates the DAV line to indicate valid data on the data lines. Listeners assert the NRFD and NDAC lines to indicate when they are ready for data and have accepted data, respectively.

During one "handshake cycle" one byte of data is transferred on the bus. Because of the open collector configuration of the bus drivers, the RFD and DAC conditions are wired - ANDed together on the bus, creating multiple listeners. Multiple listeners mean the talker will not see a "ready for data" condition until all listeners are ready for data, or a "data accepted" condition until all listeners have accepted data. Because of this method of operations, the multiple listeners on the bus accept data at different rates, and the talkers will transfer data at the rate of the slowest device. Refer to figure 35 for handshake sequence.

Table 9 indicates the status and control lines with a description of their respective functions.

10.9.3 Overall Operation (A10 CPN 601-5883-001 only)

CPU address bus information, except address lines AB0 and AB1, is supplied to chip select control U17 and decoded to provide a $\overline{CS}$ signal to one of the I/O interfaces, U7 or U8, each of which internally decode one of four port address registers via CPU address lines AB0 and AB1.

Read control circuits U2A, U11A, and U11D combine the chip select outputs with an I/O read signal to provide the selected chip with a read signal. The read signal is used to activate data buffers U6, U10, and U12 to allow data from assembly A10 to be placed on the CPU bus.

Data buffers U6, U10, and U12 are enabled, in one direction or the other, at all times. An active read signal causes data from assembly A10 to be input to CPU data bus, and an inactive read signal causes data on CPU data bus to be input to assembly A10.

Address lines AB0 and AB1 from the CPU address bus are supplied directly to read/write control logic inputs A0 and A1, respectively, on U7 and U8. These

Table 9. IEEE-488/1978 Status and Control Lines.

LINE DESIGNATION AND TITLE	LINE FUNCTION
IFC - interface clear	Activated by controller to clear interface. When true, will place all talkers and listeners to the inactive state.
ATN - attention	Activated by the controller to distinguish between device dependent data and bus commands on the data lines. When true, the information on the data lines is interpreted as a bus command.
REN - remote enable	Activated by the controller to enable it to selectively place devices in the remote mode. Only those devices addressed to listen with REN true will enter the remote mode. When this line goes false all devices will return to the local mode.
SRQ - service request	Activated by devices on the bus when they require the controller's attention. The controller must poll the devices to determine which one(s) activated this line. The 479S-6A activates this line to notify the controller of an error condition such as invalid or out-of-range data.
EDI - end or identity	Activated by a talker to indicate the end of a multiple-byte sequence or by a controller during a parallel poll. This line is not used by the 479S-6A.

inputs in conjunction with read, write, and chip select inputs decide which ports are interfaced to the data bus. If the chip select input is high, the interface circuits are disabled and no operation can be performed. If both I/O read and I/O write are inactive, the same restriction applies. An active I/O read signal allows three possible operations to be performed for combinations of A0 and A1 during an I/O read. Table 10 shows the operations performed for combinations of A0 and A1 during an I/O read.

Table 10. Read Operation Modes.

A1	A0	OPERATION
0	0	Port A ⟶ Data bus
0	1	Port B ⟶ Data bus
1	0	Port C ⟶ Data bus
1	1	Not allowed

An active I/O write signal allows four possible operations to be performed. Table 11 shows the operations performed for combinations of A0 and A1 during an I/O write.

Table 11. Write Operation Modes.

A1	A0	OPERATION
0	0	Data bus ⟶ Port A
0	1	Data bus ⟶ Port B
1	0	Data bus ⟶ Port C
1	1	Data bus ⟶ Control word register

Bus transceivers U13, U14, U15, and U16 interface the bidirectional IEEE-488 bus signals to the TTL level input and output ports in U7 and U8. Each transceiver IC contains four identical interface circuits with separate system input and output pins and common bus pin. Internal resistor networks match the bus characteristics. The bus receivers are always enabled, and the bus transmit input is ANDed with the enable input to drive the bus. The bus side of the interface has open-collector type outputs to permit wired -OR conditions on the bus. The logic signal is inverted between the bus pin and the I/O pins. Refer to figure 34 for bus transceiver schematic.

The IEEE hardware is initialized by the software into the following conditions: port C (lower) and port A are set for input, port C (higher) and port B are set for output, a passive state is output to the 488 data bus, bus fault latch (U9) is reset then enabled, and $\overline{\text{NMI}}$ is enabled via U11B. The bus data lines are serviced by U8 ports A and B. The bus control lines are serviced by U7 ports A and B. U7 port C is unused while U8 port C does internal control and monitoring of the interface circuitry. Port assignments (in hexadecimal) are as follows:

a. Port A0H: Bus management input
b. Port A1H: Bus management output
c. Port A2H: Not used
d. Port A3H: I/O control port
e. Port A4H: Bus data input
f. Port A5H: Bus data output
g. Port A6H: Status in/control out
h. Port A7H: I/O control port

An active $\overline{\text{ATN}}$ input to U14 is output on OA. The OA output disables data bus transceivers U15 and U16 and enables address comparator U1. If ATN is received while device is already in service, U9A will be clocked to hang the bus in fault condition until service sequence can terminate. The five LSB's of the IEEE-488 ASCII data bus are applied to the address decoder. They are compared to the switch positions of S1, and if the device addresses match, U1 outputs a high level signal. The high output of U1, gated by an active $\overline{\text{DAV}}$ signal, clocks device service latch U5. Clocking U5 provides a nonmaskable interrupt, $\overline{\text{NMI}}$, to the CPU. The CPU then calls a service routine which handsakes the bus under software control and transfers the data from the bus to memory, or from a memory buffer to the bus. Refer to figure 35 for handshake sequence.

The active talker must then generate a $\overline{\text{DAV}}$, data available, control signal when all listening devices indicate they are ready for data (RFD true). Data available ($\overline{\text{DAV}}$) must remain true until all listeners indicate data accepted (DAC true). The listener must go to not ready (RFD false) upon receipt or $\overline{\text{DAV}}$ true, indicate data accepted when it is latched in, and then indicate ready again when prepared for the next data byte. This handshake will ensure the bus transfers occur at the rate allowed by the slowest active device on the bus.

A service request, $\overline{\text{SRQ}}$, will be generated by the signal generator if it receives an invalid command character, or receives out-of-range data.

Once operating control is released from the front panel switches to an external controller, it will remain

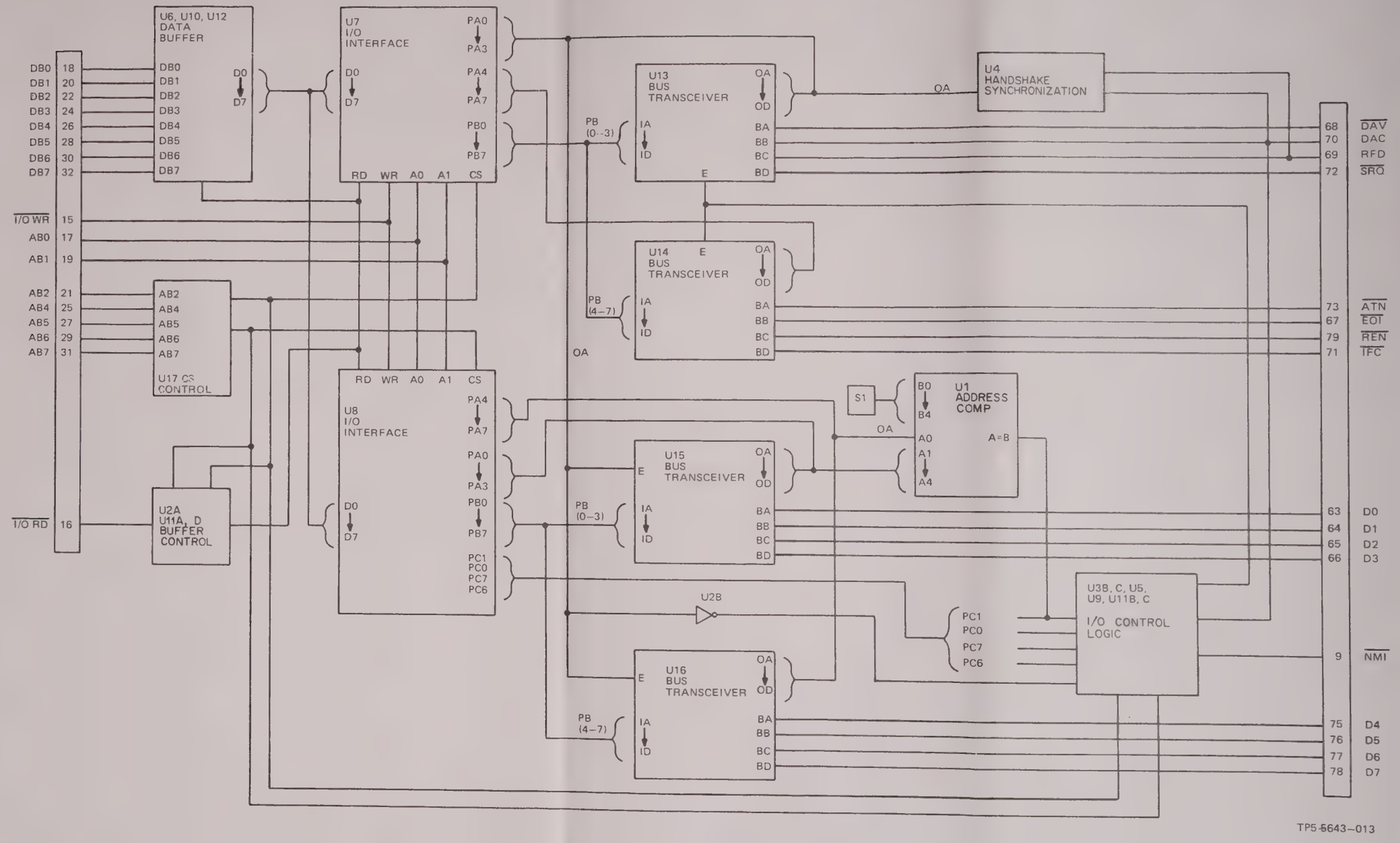

IEEE-488/1978 Bus Interface Board A10
(CPN 601-5883-001), Functional Diagram
Figure 33

there until one of two things happen; the 479S-6A is powered down or it is put into self-test mode. The front panel display will, however, continue to show valid mode and data information.

The end of self-test will result with the signal generator in initial power-up configuration under manual control. The external controller can then resume remote operation or request the test results.

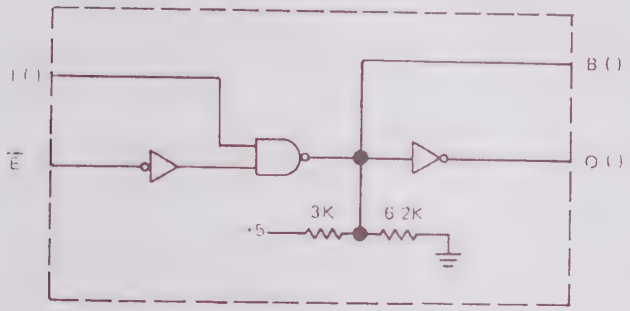

TP5-5650-011

One MC3441 Bus Transceiver (Four per Package)
Figure 34

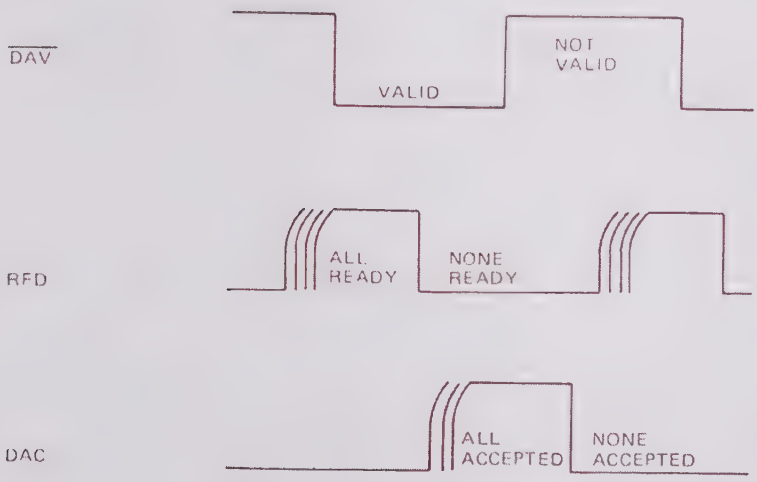

TP5-5651-011

IEEE Board Handshake Sequence
Figure 35

10.9.1 Overall Operation (A10, CPN 601-2309-001 only) (Refer to figure 36)

CPU address and control lines are provided to U4, U7A, and U13A to decode the $\overline{CS}$ signals for the GPIB interface, IC U3, GPIB address select buffer U5, and interrupt enable latch U9.

Inteface between A10 data lines and CPU data lines is provided via bidirectional tri-state buffer U1. $\overline{CS}$ signals are combined via U7B to enable U1. CPU control line $\overline{I/O\ RD}$ determines signal direction.

GPIB I/O port assignments are given in table 12.

The $\overline{CS}$ for U3 is enabled for ports A0-A7 and individual ports in this range are decoded internally by U3.

A 2-MHz clock is provided to U3 and U9 by a 16-MHz oscillator divided by 8. The oscillator consists of U6D, U6E, R9, R10, C8, C12, and Y1. Division by 8 is accomplished by U8.

Bus transceivers U2, U10, U11, and U12 interface the GBIP signals to U3. The bus side of these transceivers have open collector type outputs to provide a wired-OR function on the bus. Each line is bidirectional, the direction of which is determined by U3 in response to conditions on the bus.

Special purpose GPIB interface IC U3 properly handles all GPIB protocol without CPU interface. When a condition has occurred on the GPIB bus that is of interest to the CPU, U3 will generate an interrupt to allow the CPU to handle the condition.

Table 12. GPIB I/O Port Assignments.

PORT NUMBERS	READ/ WRITE	FUNCTION
A0	Read/write	GPIB data transfer
A1-A7	Read/Write	GPIB status and control
A8	Read	GPIB address select/interrupt reset
A8	Write	Interrupt reset
A9-AF		Not used

The GPIB hardware is initialized by the CPU writing into appropriate registers of U3. During initialization, the CPU reads switch S1 positions through U5 and converts this information into U3 talk-listen addresses. Switch-position information is also used to reset U9 to a predetermined state. The dip switches (S1) are read at power up only. Changing switch position after power up will have no effect on GPIB address until a self-test or device clear is initiated.

When the CPU is processing a GPIB interrupt on the bus, U3 is prevented from interrupting the CPU by U9. At the end of each GPIB interrupt, the CPU resets U9 to enable it to generate any pending or future interrupt to the CPU.

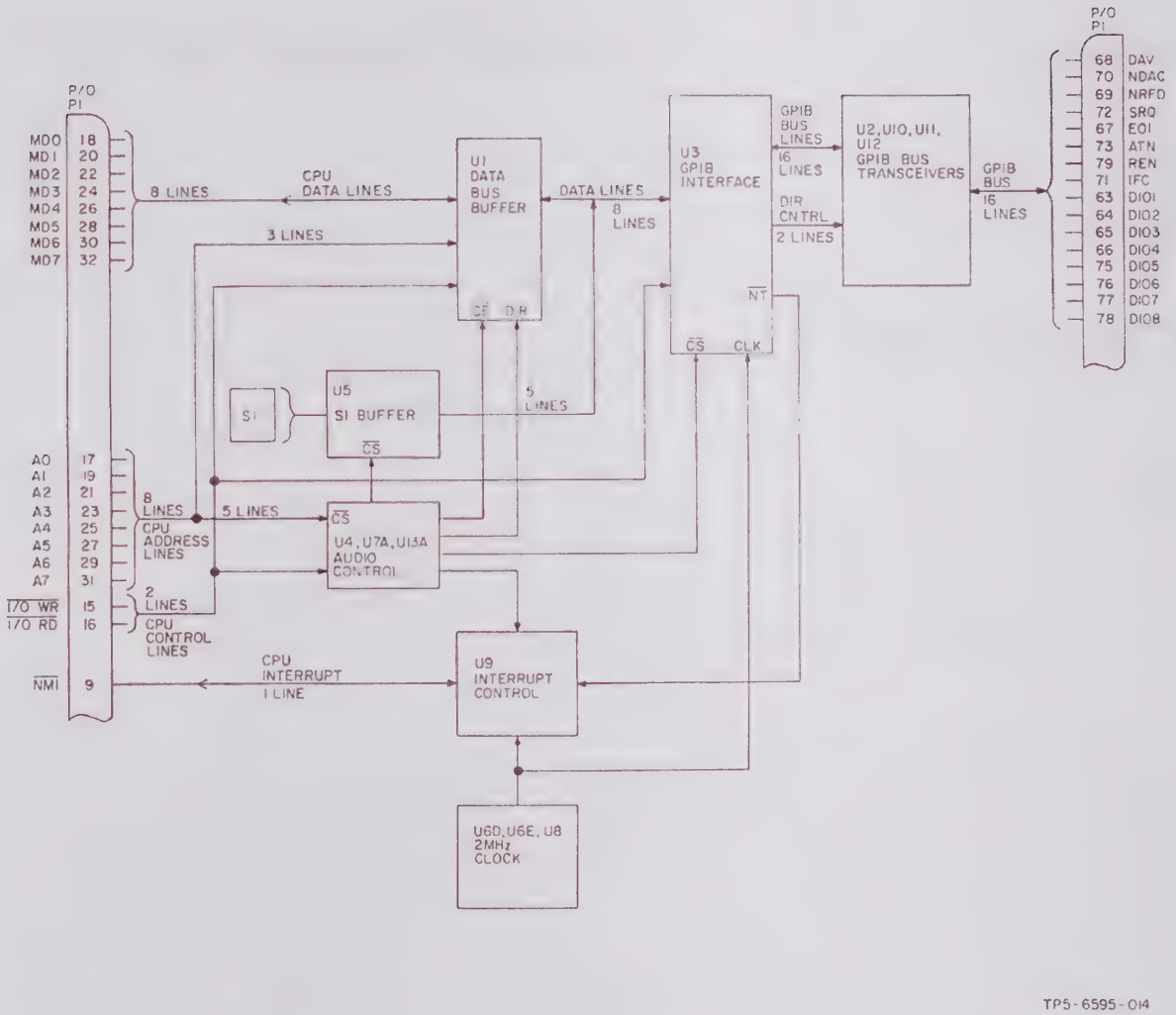

TP5-6595-014

IEEE-488/1978 Bus Interface Board A10 (CPN 604-2309-001), Functional Diagram
Figure 36

Collins 479S-6A VOR/ILS Signal Generator

Rockwell International

operation

Collins Government Avionics Division

Printed in USA

523-0768883-101118
1 September 1978
1st Revision, 15 October 1980

table of contents

Paragraph		*Page*
1.	*Introduction*	1
2.	*Controls and Indicators*	1
3.	*Operation Procedures*	6
3.1	Initial Power On	6
3.2	Self-Test Operation	7
3.3	RF Output Control	8
3.4	On-Channel/RF Frequency/Mode Selection	10
3.5	Off-Channel RF Frequency Selection	16
3.6	VOR Radial Selection and Adjustment	17
3.7	VOR Mode Tone Selections	19
3.8	ILS DDM Selection and Adjustment	20A
3.9	Marker Beacon Marker Selection	26
3.10	Communication Mode Tone Selection	28
3.11	Percent Modulation Adjustment	29
3.12	External Modulation Operation	31
3.13	Scope Trigger Operation	31
3.14	Store/Recall Selection	32
3.15	IEEE Operation	32
3.15.1	General	32
3.15.2	IEEE Operation for Units with A10 CPN 601-5883-001 Installed	33
3.15.3	IEEE Operation for Units with A10 CPN 601-2309-001 Installed	36
3.15.4	IEEE Programming Examples	41

List of Effective Pages

*The asterisk indicates pages changed, added, or deleted by the current change.

Page No	Issue
*Title	15 Oct 80
*List of Effective Pages	15 Oct 80
1 thru 7	1 Sep 78
*8	15 Oct 80
9 thru 20	1 Sep 78
*20A thru 20B Added	15 Oct 80
*21	15 Oct 80
22 thru 28	1 Sep 78
*29	15 Oct 80
30 thru 31	1 Sep 78
*32 thru 42	15 Oct 80

Record of Revisions

RETAIN THIS RECORD IN THE FRONT OF MANUAL.
ON RECEIPT OF REVISIONS, INSERT REVISED PAGES IN THE MANUAL,
AND ENTER DATE INSERTED AND INITIALS.

REV NO	REVISION DATE	INSERTION DATE/BY	SB NUMBER INCLUDED	REV NO	REVISION DATE	INSERTION DATE/BY	SB NUMBER INCLUDED
1st Ed	1 Sep 78		None				
1	15 Oct 80		1 thru 10				

1. INTRODUCTION

This section provides the instructions for operating the 479S-6A VOR/ILS Signal Generator. The signal generator produces both rf and audio signals required for testing VOR, ILS, marker beacon, and vhf communication receivers. The signal generator switches to the correct mode and preset conditions with the selection of a VOR, ILS, marker beacon, or vhf communication rf frequency. The signal generator is capable of operating on 115 V ac, 50/60 Hz, or 230 V ac, 50/60 Hz. The generator is shipped from the factory wired for 115-V ac operation. If 230-V ac operation is required, refer to paragraph 7 of the description section.

2. CONTROLS AND INDICATORS

Figure 1 is an illustration of the 479S-6A front panel with a brief description of each functional area. Figure 2 illustrates and tables 1 through 7 describe the controls and indicators in each of the major functional areas.

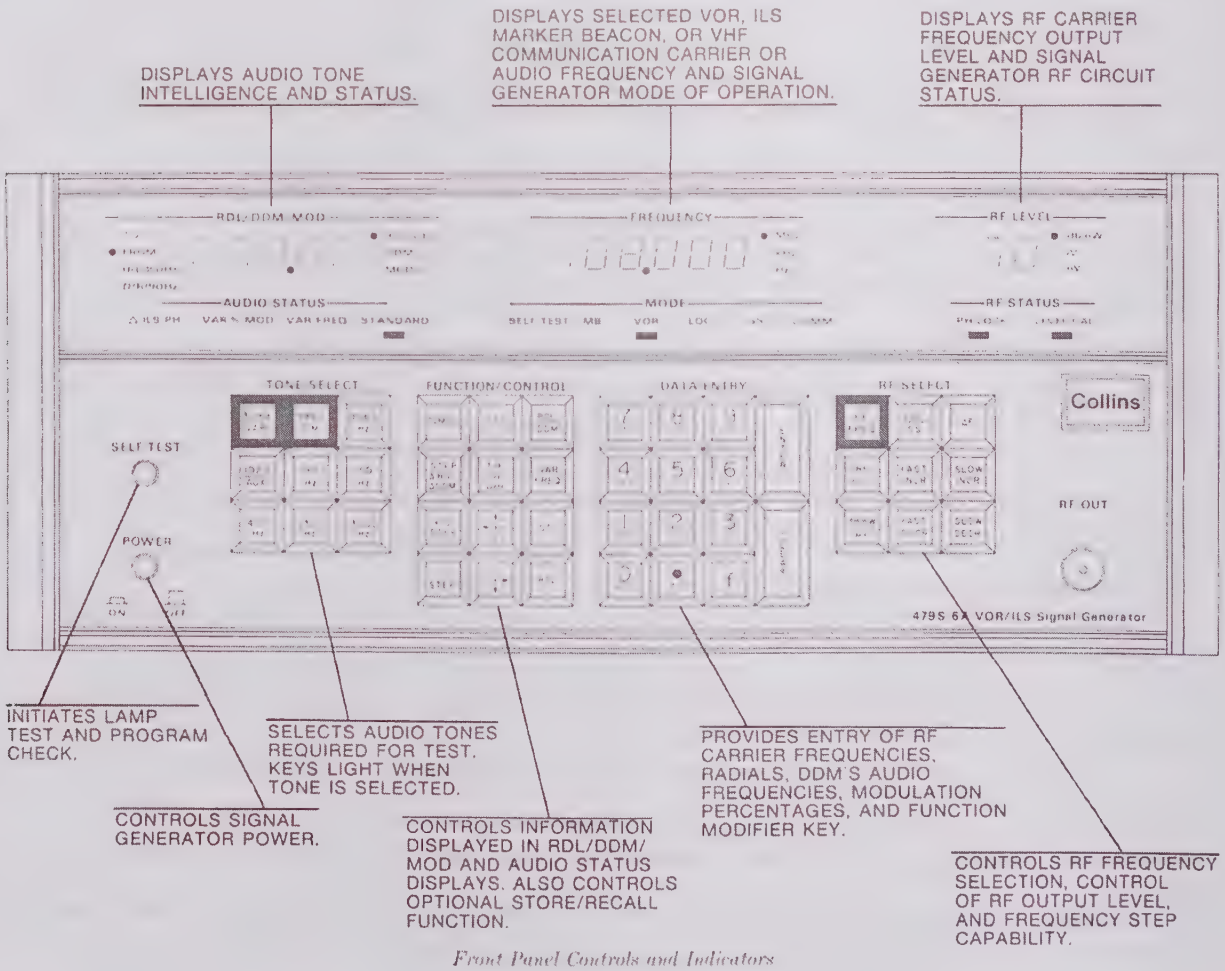

Front Panel Controls and Indicators
Figure 1

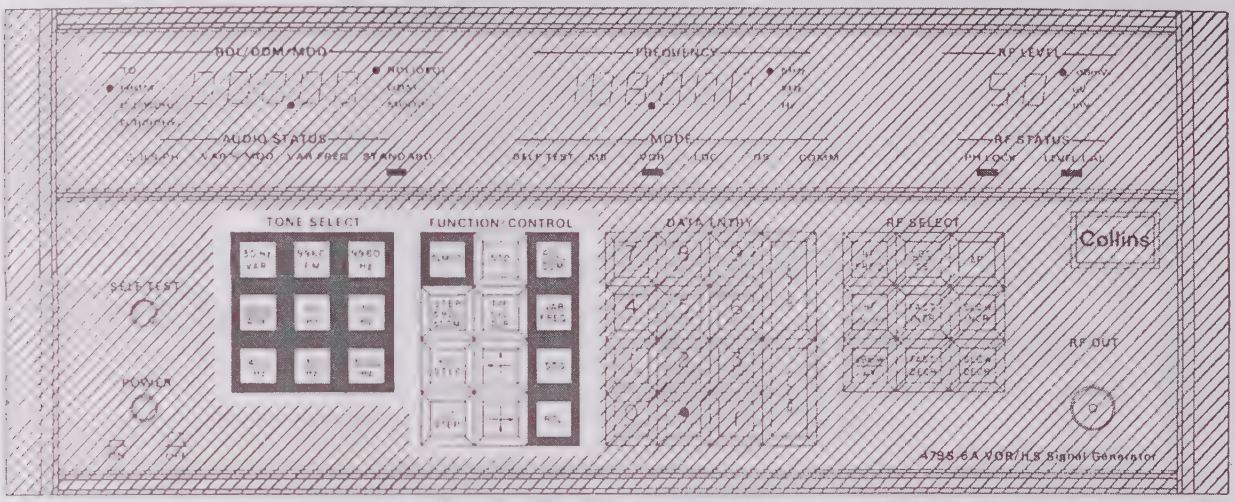

Controls and Indicators
Figure 2 (Sheet 1 of 4)

NOTE: SHADED KEYS ARE LIT WHEN ON.

Table 1. TONE SELECT Key Functions.

KEY	FUNCTION
30 Hz VAR	Selects 30-Hz variable VOR signal.
9960 FM	Selects 9960-Hz FM (30-Hz reference) VOR signal.
9960 Hz	Selects 9960-Hz only signal.
1020/AUX	Selects 1020-Hz audio or AUX tone when used in conjunction with VAR FREQ or % MOD-FUNCTION/CONTROL key.
90 Hz	Selects 90-Hz ILS signal.
150 Hz	Selects 150-Hz ILS signal.
400 Hz	Selects 400-Hz (outer marker) marker beacon signal.
1300 Hz	Selects 1300-Hz (middle marker) marker beacon signal.
3000 Hz	Selects 3000-Hz (inner marker) marker beacon signal.

Table 2. FUNCTION/CONTROL Key Functions.

KEY	FUNCTION
% MOD	Enables selection of percent modulation through DATA ENTRY keys and switches RDL/DDM/MOD display to indicate percent modulation.
STD	Switches RDL/DDM/MOD, AUDIO STATUS, FREQUENCY, and RF LEVEL displays back to the preset condition for the selected mode.
RDL/DDM	Enables selection of radial in VOR mode or DDM in ILS mode through DATA ENTRY keys.
STEP ΔRDL ΔDDM	Steps VOR radial in +30-degree steps or ILS DDM in standard DDM steps.
T/F U/L D/R	Selects either a FROM or TO radial in VOR mode or a 90-Hz predominant or 150-Hz predominant signal in ILS mode.
VAR FREQ	Enables DATA ENTRY keys for varying standard tones (30, 9960, 9960 FM, 90, and 150 Hz). Enables selection of AUX audio frequencies through DATA ENTRY keys when used in conjunction with 1020/AUX-TONE SELECT key.
+10 STEP	Steps VOR mode radial in +10-degree steps.
	Slews VOR mode radial in +0.01-degree steps, LOC mode DDM in 0.001 (left) steps, or GS mode DDM in 0.002 (up) steps.
-10 STEP	Steps VOR mode radial in -10-degree steps.
	Slews VOR mode radial in -0.01-degree steps, LOC mode DDM in 0.001 (right) steps, or GS mode DDM in 0.002 (down) steps.
STO	Enables storage of selected setup by entry of memory location in DATA ENTRY keys (operational only on units with options 1 or 2).
RCL	Enables recall of entries in storage by entering memory location in DATA ENTRY keys (operational only on units with options 1 or 2).

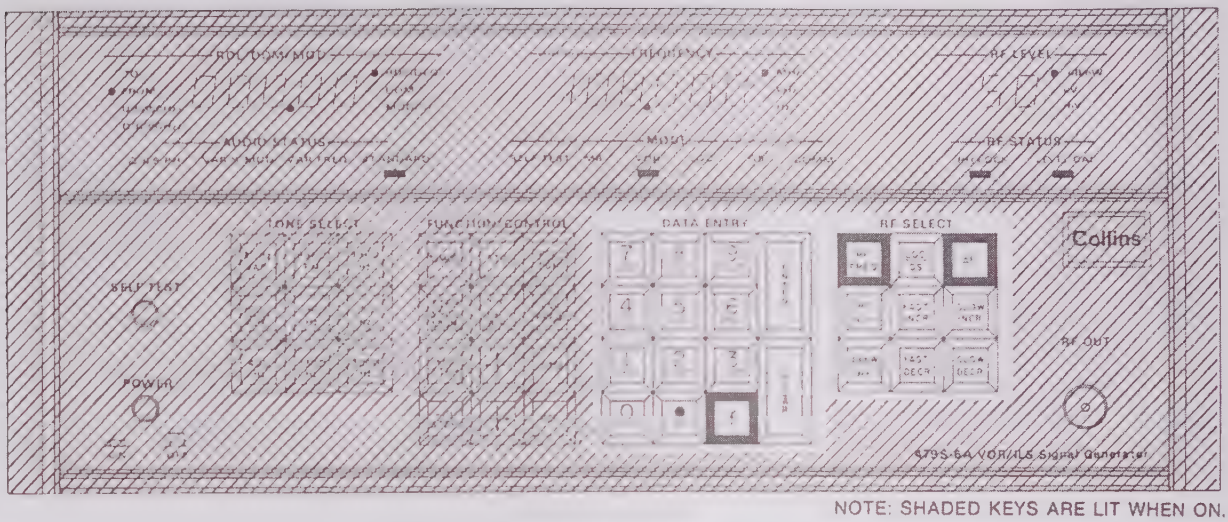

NOTE: SHADED KEYS ARE LIT WHEN ON.

Controls and Indicators
Figure 2 (Sheet 2)

Table 3. DATA ENTRY Key Functions

KEY	FUNCTION
Numerical 0/60° through 9/330°	Provides numerical entry of rf carrier frequency, VOR radials, ILS DDM, and percent modulation, auxiliary audio frequency, or entry of VOR radials at every 30° major heading when modifier (f) key is enabled (lit). In ILS mode 0/60°, key selects Δ ILS PH when modifier (f) key is enabled (lit).
• (decimal)/30°	Used for numerical entries requiring a decimal point or for a 30-VOR radial when modifier (f) key is enabled (lit).
ENTER	Enables numerical entries to signal generator circuits.
CLEAR	Clears numerical key entry before ENTER key is pressed and also clears nonvalid entries.
f	Selects lower function (°) of DATA ENTRY keys. Used as a modifier when in ILS mode to select Δ ILS PH.

Table 4. RF SELECT Key Functions.

KEY	FUNCTION
RF FREQ	Enables selection of rf carrier frequencies through DATA ENTRY keys. Also used to step rf frequencies.
LOC/GS	Switches rf carrier frequency from selected localizer frequency to paired glideslope frequency or vice versa.
ΔF	Enables rf carrier frequency slewing through FAST INCR, SLOW INCR, FAST DECR, and SLOW DECR keys.
RF ON/OFF	Switches output of RF OUT connector alternately from ON to OFF.
FAST INCR	Increases rf output level in 10-dB steps or, when ΔF key is enabled (lit), increases rf carrier frequency at a fast rate.
SLOW INCR	Increases rf output level in 1-dB steps or, when ΔF key is enabled (lit), increases rf carrier frequency at a slow rate.
FAST DECR	Decreases rf output level in 10-dB steps or, when ΔF key is enabled (lit), decreases rf carrier frequency at a fast rate.
SLOW DECR	Decreases rf output level in 1-dB steps or, when ΔF key is enabled (lit), decreases rf carrier frequency at a slow rate.

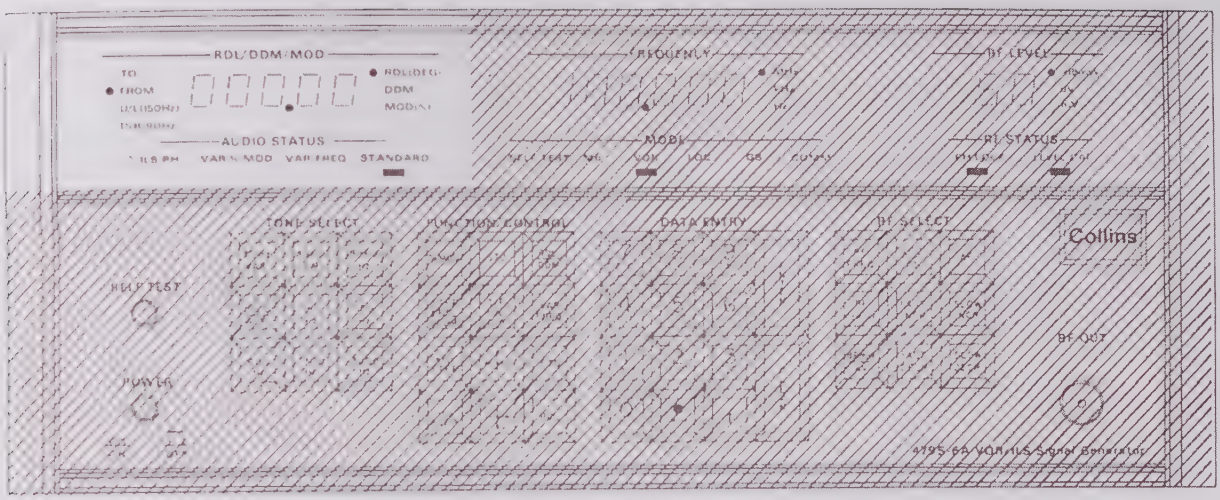

Controls and Indicators
Figure 2 (Sheet 3)

Table 5. RDL/DDM/MOD and AUDIO STATUS Display Functions.

DISPLAY/INDICATOR	FUNCTION
RDL/DDM/MOD Display and Indicators	
TO indicator	Indicates generation of a VOR TO radial.
FROM indicator	Indicates generation of a VOR FROM radial.
U/L (150-Hz) indicator	Indicates generation of an ILS up/left (150-Hz predominant) signal
D/R (90-Hz) indicator	Indicates generation of an ILS down/right (90-Hz predominant) signal.
5-digit digital display	Provides numerical indication of generated radial, DDM, or percent modulation.
RDL (DEG) indicator	Indicates digital display is VOR radial in degrees.
DDM indicator	Indicates digital display is ILS DDM.
MOD (%) indicator	Indicates digital display is percent modulation.
AUDIO STATUS Display	
ΔILS PH	Indicates a 60-degree phase shift of the 150-Hz component with respect to the 90-Hz component, as measured between positive-going zero crossing of the 90-Hz and 150-Hz components of the ILS composite waveform.
VAR % MOD indicator	Indicates percent modulation displayed is variable through DATA ENTRY keys.
VAR FREQ	Indicates 30-, 9960-, 9960 FM-, 90-, and 150-Hz tones or AUX audio tone are variable through DATA ENTRY keys.
STANDARD indicator	Indicates standard modulation conditions are present.

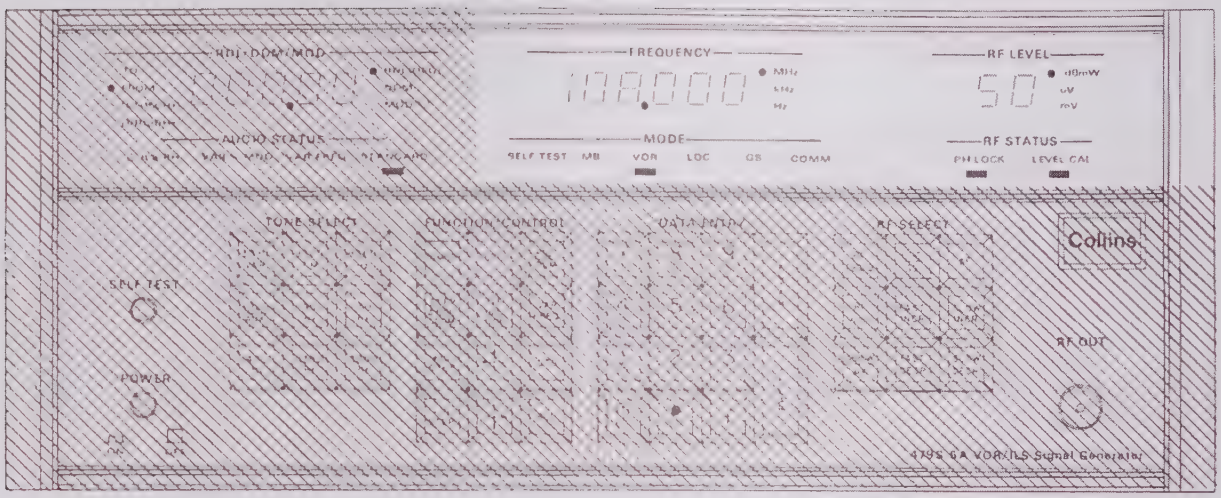

Controls and Indicators
Figure 2 (Sheet 4)

Table 6. FREQUENCY and MODE Display Functions.

DISPLAY/INDICATOR	FUNCTION
FREQUENCY Display	
6-digit digital display	Provides numerical indication of actual rf carrier frequency or selected variable audio frequency.
MHz indicator	Indicates rf carrier frequency resolution is 1 kHz.
kHz indicator	Indicates rf carrier frequency resolution is 0.1 kHz.
Hz indicator	Indicates audio frequency with 0.1-Hz resolution to 1 kHz and 1.0-Hz resolution above 1 kHz.
MODE Display	
SELF TEST indicator	Indicates signal generator is in self-test mode.
MB indicator	Indicates marker beacon frequency selected and signal generator is in marker beacon mode.
VOR indicator	Indicates VOR frequency selected and signal generator is in VOR mode.
LOC indicator	Indicates localizer frequency selected and signal generator is in localizer mode.
GS indicator	Indicates glideslope frequency selected and signal generator is in glideslope mode.
COMM indicator	Indicates vhf communication frequency selected and signal generator is in vhf comm mode.

Table 7. RF LEVEL and RF STATUS Display Function.

DISPLAY/INDICATOR	FUNCTION
RF LEVEL Display	
3-digit digital display	Provides numerical indication of rf output level and indicates when rf output is turned off.
-dBmW indicator	Indicates digital readout is displaying rf power in dB mW.
μV indicator	Indicates digital readout is displaying rf output level in microvolts.
mV indicator	Indicates digital readout is displaying rf output level in millivolts.
RF STATUS Display	
PH LOCK indicator	Indicates rf frequency synthesizer is locked onto the selected frequency.
LEVEL CAL indicator	Indicates the rf output from the signal generator is within the specified limits.

3. OPERATION PROCEDURES

Paragraphs 3.1 through 3.15 contain the operating procedures for the signal generator. The procedures provide operating instructions for each mode of operation and each function that can be performed in a mode of operation.

Refer to table 8 for a list of the operating procedures and the applicable paragraph.

Caution

Ensure that signal generator is positioned to provide clearance at rear of generator for intake of cooling air.

Table 8. Operating Procedures Reference List.

OPERATING PROCEDURE	PARAGRAPH
Initial turn-on	3.1
Self-test operation	3.2
Rf output control	3.3
Frequency/mode selection	3.4
Rf frequency slewing	3.5
VOR radial selection and adjustment	3.6
VOR mode tone selection	3.7
ILS DDM selection and adjustment	3.8
Marker beacon marker selection	3.9
Communication mode tone selection	3.10
% modulation adjustment	3.11
External modulation	3.12
Scope trigger	3.13
Store/recall operation	3.14
IEEE operation	3.15

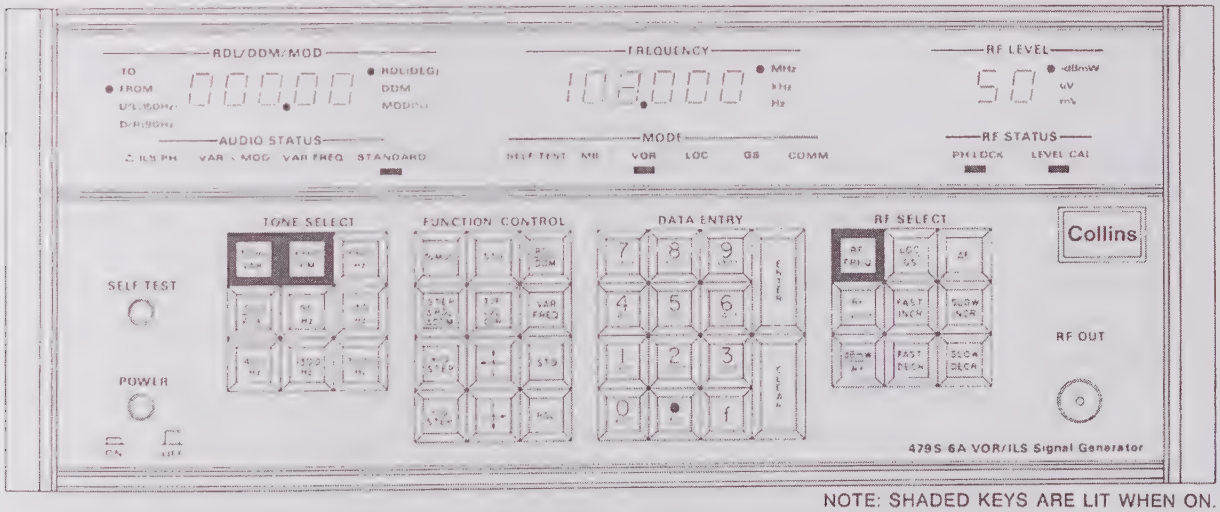

NOTE: SHADED KEYS ARE LIT WHEN ON.

Initial Power On
Figure 3

3.1 Initial Power On (Refer to figure 3.)

a. Press POWER switch to ON.
b. A computer memory check is performed immediately after power is turned on to determine if the output from the memories is correct. If one of the RAM's has an incorrect output, the RF LEVEL display will indicate the RAM that has failed (. . . 1). The signal generator will start another RAM check and will continue to sequence until malfunction is corrected. If an incorrect output occurs on the ROM check, the number of the malfunctioning

ROM is displayed on the RDL/DDM/MOD display and the MODE display SELF TEST indicator is lit momentarily; then the memory chip number and SELF TEST indicator flash on and off. Further functions cannot be performed until the signal generator is repaired.

c. If no malfunctions occur, the indications appear as shown in figure 3. This is the standard VOR mode condition occurring each time ac power is applied.

d. Proceed with tests.

3.2 Self-Test Operation (Refer to figure 4.)

The self-test operation provides the operator with a lamp check and a program check of the signal generator.

a. Press and hold SELF TEST switch and check indicators, keys, and displays. Refer to figure 4, view A for correct indications.

Note

The STO and RCL keys will light; however, they are nonoperational unless option 1 or 2 is installed in the signal generator.

b. Release SELF TEST switch, and program check begins. RDL/DDM/MOD display counts sequentially through programmed memory chips (ROM's). If the output from a memory chip (ROM) is incorrect, the RDL/DDM/MOD display indicates the number of the malfunctioning memory chip, and the MODE display SELF TEST indicator lights. The number of the memory and the SELF TEST indicator flash on and off indicating the malfunction. The signal generator must be repaired before the signal generator can perform any additional functions.

c. After completion of the ROM check, the signal generator switches to the initial power-on status, checks the RAM's, rechecks the ROM's, and then switches to the 108.00-MHz VOR mode preset condition as shown in figure 3.

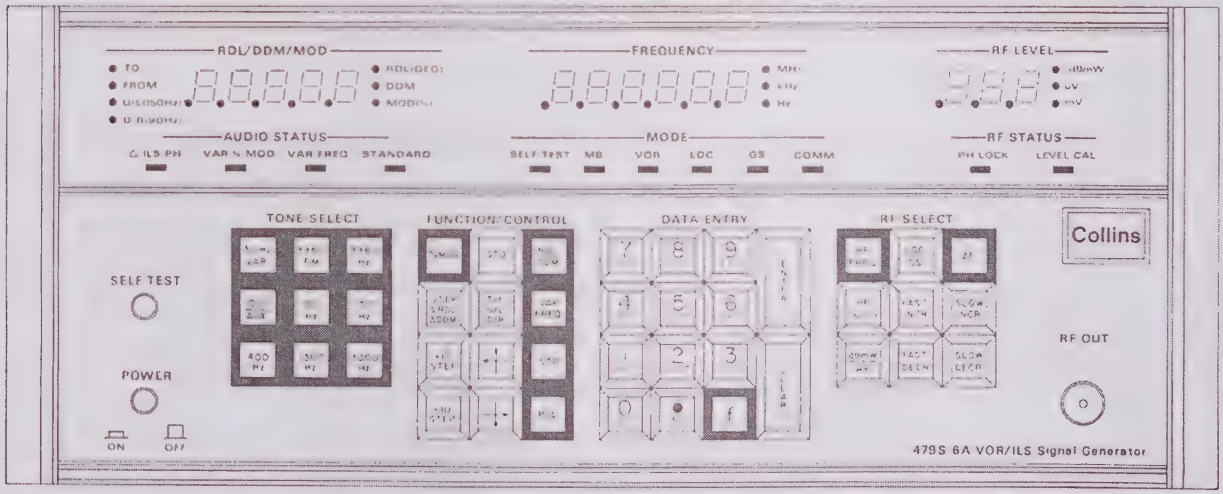

NOTE: SHADED KEYS ARE LIT WHEN ON.

View A. Lamp Check

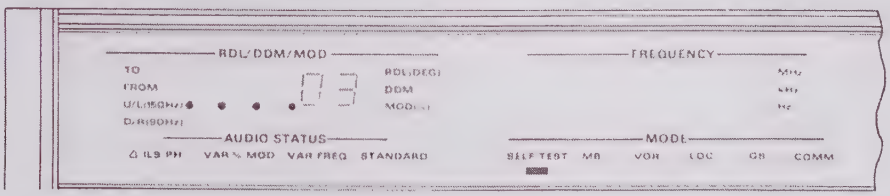

View B. Program Check

Self-Test Operation
Figure 4

3.3 RF Output Control (Refer to figure 5.)

a. RF Output On/Off (Refer to view A.)

The RF SELECT—RF ON/OFF key provides operator control of the rf output. Press the RF ON/OFF key to turn off or turn on the rf output, depending on the output state, prior to pressing the key. When rf output is removed, the following should be observed:

1. RF LEVEL display indicates OFF.
2. RF STATUS display PH LOCK indicator is off.
3. With modulation tone(s) present, RF STATUS display LEVEL CAL indicator may flicker. With no modulation present, LEVEL CAL indicator is off.

When the rf output is on, the RF LEVEL display indicates the selected output level. The RF STATUS—PH LOCK and LEVEL CAL indicators are lit (on), indicating that the rf synthesizer phase-lock loop is locked and that the output level of the rf modulator circuitry is correct.

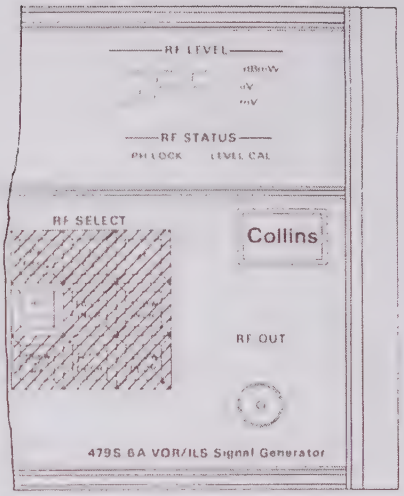

View A. RF Output ON/OFF

b. RF Output Level Increase (Refer to view B.)

The rf output level is increased using the RF SELECT—FAST INCR and SLOW INCR keys. The FAST INCR key increases the output level in 10-dB steps, and the SLOW INCR key increases output level in 10-dB steps, and the SLOW INCR key increases the level in 1-dB steps. Keeping either key depressed provides continuous increases in the output level at applicable decibel steps. The RF LEVEL display indicates the level changes.

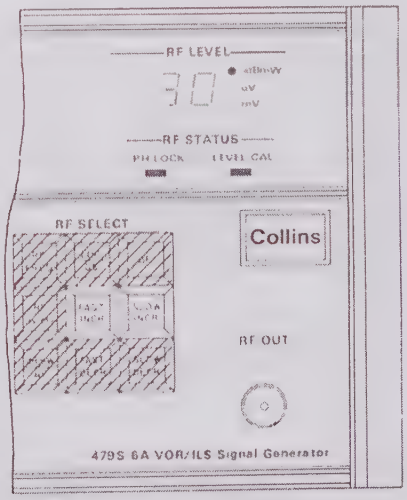

View B. RF Output Increase

RF Output Control
Figure 5 (Sheet 1 of 2)

c. RF Output Level Decrease (Refer to view C.)

The rf output level is decreased using the RF SELECT—FAST DECR and SLOW DECR keys. The operation is the same as described for output level increases in step b except that the output level decreases.

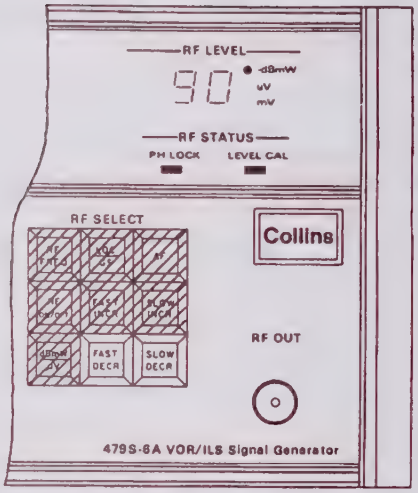

View C. RF Output Decrease

d. RF Output Reference Level Change (Refer to view D.)

The rf output level can be read either in -dB mW or voltage, depending on test requirements. Press RF SELECT—dBmW/μV key to switch RF level display from -dBmW to μV or mV, or vice versa.

Note

When the RF LEVEL is displayed in μV/mV, an additional 6 dB of attenuation is placed in the rf output circuit that provides a "hard microvolt" output at the RF OUT connector. With a "hard microvolt" output, the actual voltage at the RF OUT connector is one-half the voltage indicated on the RF LEVEL display. This eliminates the requirement for an external 6-dB pad.

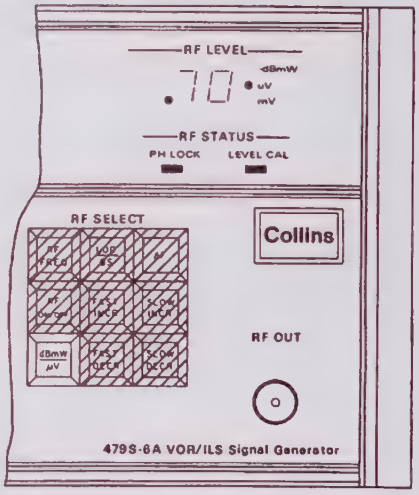

View D. RF Output Reference Level Change

RF Output Control
Figure 5 (Sheet 2)

3.4 On-Channel/RF Frequency/Mode Selection (Refer to figure 6.)

Refer to table 9 for standard VOR, localizer, glideslope, and marker beacon frequencies. (Additional frequencies in the 74.6- to 75.4-MHz range provide interference signal test capability for the marker beacon mode.) Vhf communication frequencies from 118.000 to 151.975 MHz are selectable at each 25-kHz increment.

a. Check that RF SELECT—RF FREQ key is lit, indicating that the DATA ENTRY keys are armed to receive rf carrier frequency selections. Refer to view A. If the RF FREQ key is not lit, press key to enable DATA ENTRY keys for frequency selection. RF FREQ key remains lit after entry of the frequency selection for additional frequency selections. The key remains lit until either the FUNCTION/CONTROL—% MOD, RDL/DDM, or VAR FREQ, or the DATA ENTRY—f key is pressed.

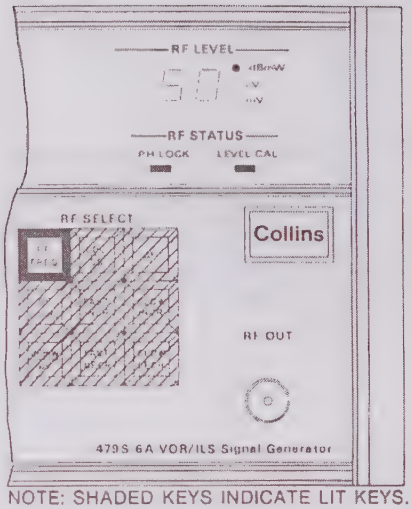

NOTE: SHADED KEYS INDICATE LIT KEYS.

View A. RF Frequency Selection Enable

b. Enter selected rf carrier frequency on DATA ENTRY numerical keys. Refer to view B. If an error is made during entry of the frequency and before the ENTER key is pressed, press CLEAR key to remove entered frequency, and reenter correct frequency.

c. Press DATA ENTRY—ENTER key to enter selected frequency in signal generator circuits.

d. FREQUENCY display indicates the selected rf carrier frequency and the MODE display indicates the mode of operation for the selected frequency automatically. If display is blinking, the data entered is invalid. Press DATA ENTRY—CLEAR key to clear display, and repeat steps b through d.

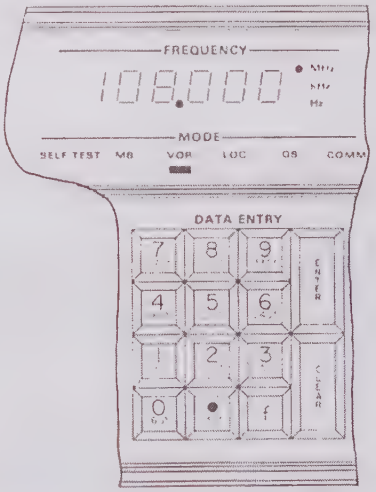

View B. RF Frequency Entry and Display With Mode Indicator

e. RF STATUS—PH LOCK AND LEVEL CAL indicators are lit, indicating signal generator is locked on the selected frequency and the rf output is calibrated. Refer to view C. If either indicator is not lit, repair signal generator.

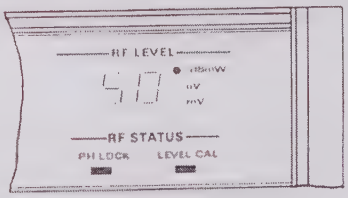

View C. RF Status Indicators

Frequency/Mode Selection
Figure 6 (Sheet 1 of 2)

f. When the RF SELECT—RF key is lit and the carrier is being modulated, each successive depression of the RF FREQ key will step the carrier up one channel in the mode selected. The signal generator will step to the highest frequency and then return to the lowest frequency for the selected mode on the next step in all modes except LOC. When the highest channel is reached in LOC mode, the next step will place the signal generator in VOR mode (112.00 MHz).

g. When the RF SELECT—RF FREQ key is lit and the carrier is not modulated (all TONE SELECT keys off), each successive depression of the RF FREQ key will step the carrier up in 50-kHz steps in VOR/LOC, 150-kHz steps in GS, and 25-kHz steps in COMM.

h. Selection of a new mode automatically initializes standard modulation at the proper level. Refer to figure 7 for preset conditions. Rf power level, however, remains at the last level set (except following a self-test). If any, or all, tones are deleted, changing rf frequencies within a mode will leave the tone status unchanged.

i. Selection of an rf carrier frequency automatically selects the corresponding 2-of-5 code outputs. These lines are available at the REMOTE TUNE connector for channeling the receiver under test. When performing off-channel tests, such as if selectivity measurements, the REMOTE TUNE channeling information remains tuned to the last rf channel selected prior to entering the variable rf mode. The REMOTE TUNE connector also provides NAV disable, COMM disable, and LOC/GS energize mode discretes, as well as two logic signals for control of antenna relay switching.

j. In the ILS modes, if a localizer rf carrier frequency is selected and it is desired to change to a paired glideslope rf carrier frequency or vice versa, press RF SELECT—LOC/GS key and the signal generator will switch to the paired frequency and mode in a preset condition. Refer to view D.

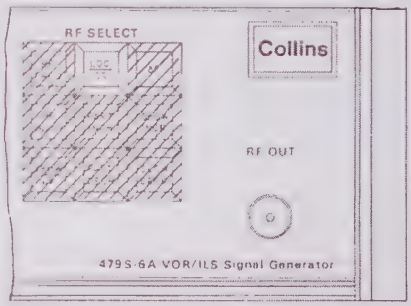

View D. ILS Mode Change

Frequency/Mode Selection
Figure 6 (Sheet 2)

Table 9. Standard VOR, ILS (Localizer and Glideslope), and Marker Beacon Frequencies.

VOR FREQUENCIES (MHz)			PAIRED ILS FREQUENCIES		MARKER BEACON FREQUENCIES (MHz)
			LOCALIZER (MHz)	GLIDESLOPE (MHz)	
108.00	112.70	115.40	108.10	334.70	74.600
108.05	112.75	115.45	108.15	334.55	74.625
108.20	112.80	115.50	108.30	334.10	74.650
108.25	112.85	115.55	108.35	333.95	74.675
108.40	112.90	115.60	108.50	329.90	74.700
108.45	112.95	115.65	108.55	329.75	74.725
108.60	113.00	115.70	108.70	330.50	74.750
108.65	113.05	115.75	108.75	330.35	74.775
108.80	113.10	115.80	108.90	329.30	74.800
108.85	113.15	115.85	108.95	329.15	74.825
109.00	113.20	115.90	109.10	331.40	74.850
109.05	113.25	115.95	109.15	331.25	74.875
109.20	113.30	116.00	109.30	332.00	74.900
109.25	113.35	116.05	109.35	331.85	74.925
109.40	113.40	116.10	109.50	332.60	74.950
109.45	113.45	116.15	109.55	332.45	74.975
109.60	113.50	116.20	109.70	333.20	75.000
109.65	113.55	116.25	109.75	333.05	75.025
109.80	113.60	116.30	109.90	333.80	75.050
109.85	113.65	116.35	109.95	333.65	75.075
110.00	113.70	116.40	110.10	334.40	75.100
110.05	113.75	116.45	110.15	334.25	75.125
110.20	113.80	116.50	110.30	335.00	75.150
110.25	113.85	116.55	110.35	334.85	75.175
110.40	113.90	116.60	110.50	329.60	75.200
110.45	113.95	116.65	110.55	329.45	75.225
110.60	114.00	116.70	110.70	330.20	75.250
110.65	114.05	116.75	110.75	330.05	75.275
110.80	114.10	116.80	110.90	330.80	75.300
110.85	114.15	116.85	110.95	330.65	75.325
111.00	114.20	116.90	111.10	331.70	75.350
111.05	114.25	116.95	111.15	331.55	75.375
111.20	114.30	117.00	111.30	332.30	75.400
111.25	114.35	117.05	111.35	332.15	
111.40	114.40	117.10	111.50	332.90	
111.45	114.45	117.15	111.55	332.75	
111.60	114.50	117.20	111.70	333.50	
111.65	114.55	117.25	111.75	333.35	
111.80	114.60	117.30	111.90	331.10	
111.85	114.65	117.35	111.95	330.95	
112.00	114.70	117.40			
112.05	114.75	117.45			
112.10	114.80	117.50			
112.15	114.85	117.55			
112.20	114.90	117.60			
112.25	114.95	117.65			
112.30	115.00	117.70			
112.35	115.05	117.75			
112.40	115.10	117.80			
112.45	115.15	117.85			
112.50	115.20	117.90			
112.55	115.25	117.95			
112.60	115.30				
112.65	115.35				

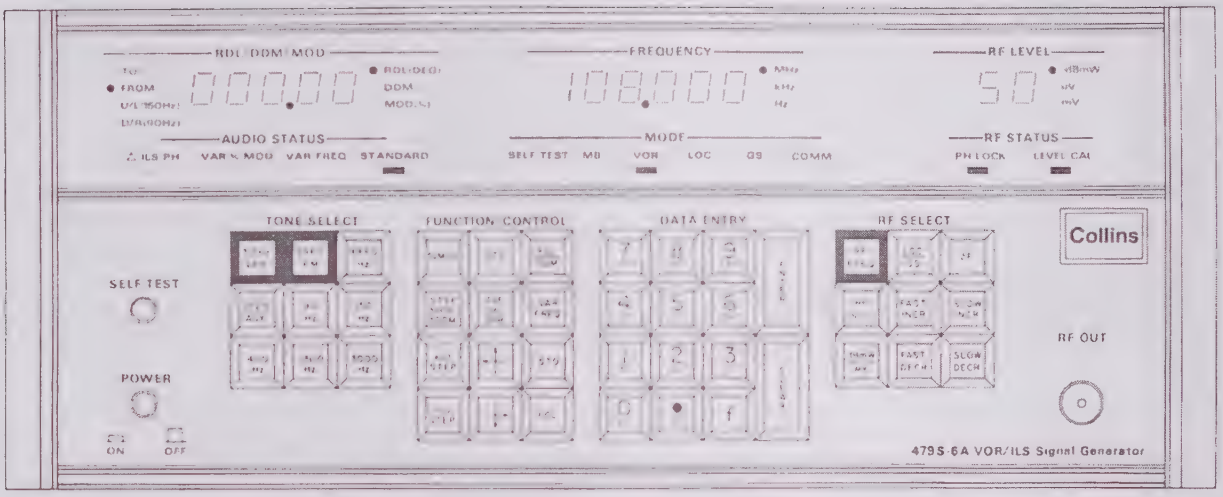

View A. VOR Mode Preset Condition

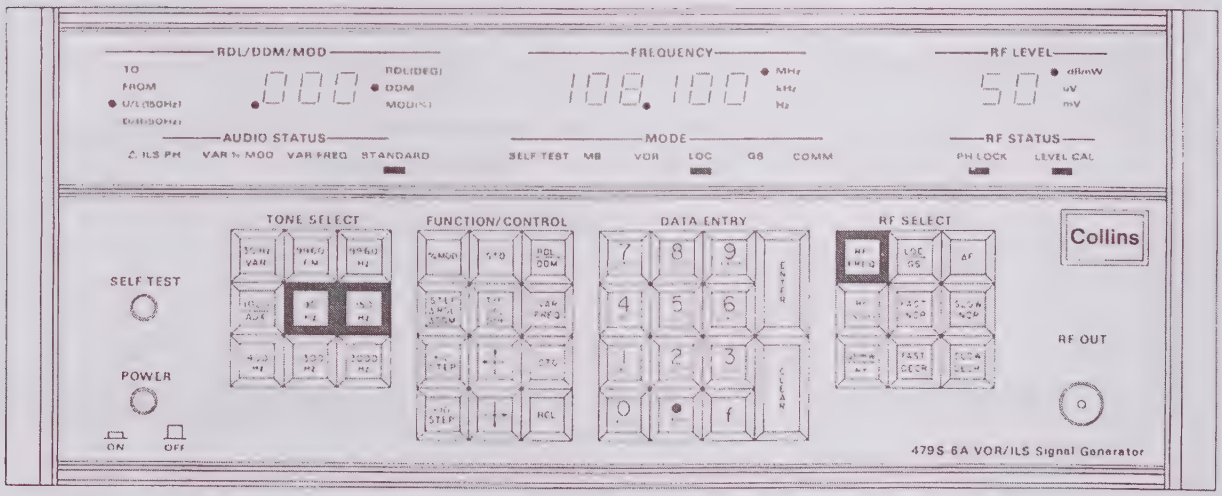

View B. LOC Mode Preset Condition

Preset Conditions
Figure 7 (Sheet 1 of 3)

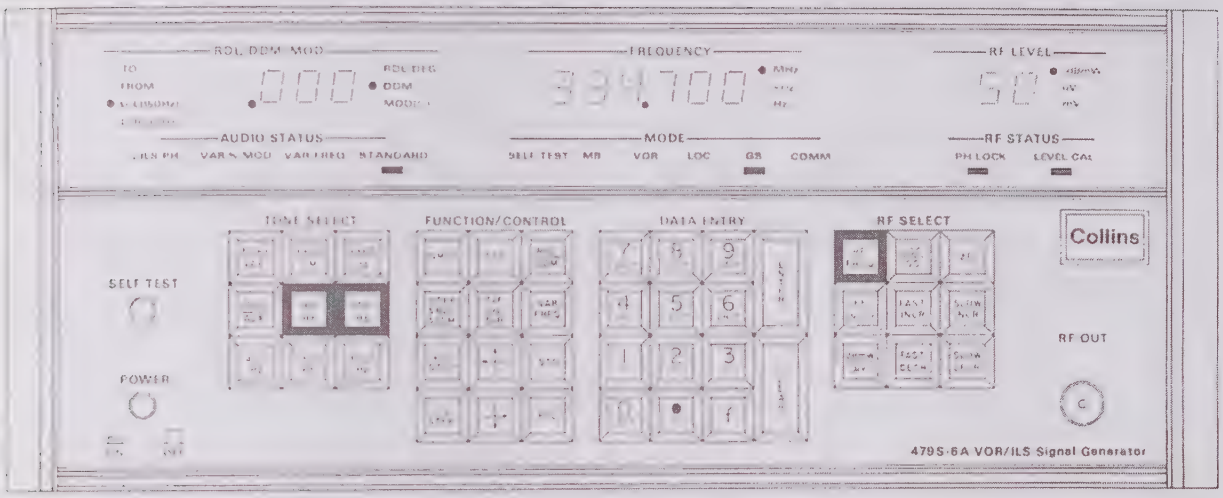

View C. GS Mode Preset Condition

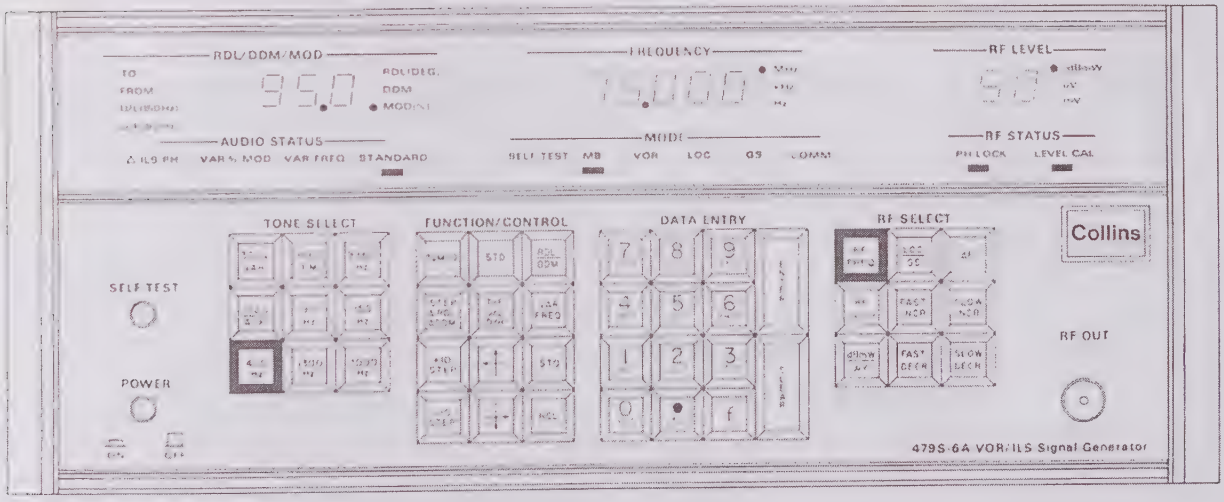

View D. Marker Beacon Mode Preset Condition

Preset Conditions
Figure 7 (Sheet 2)

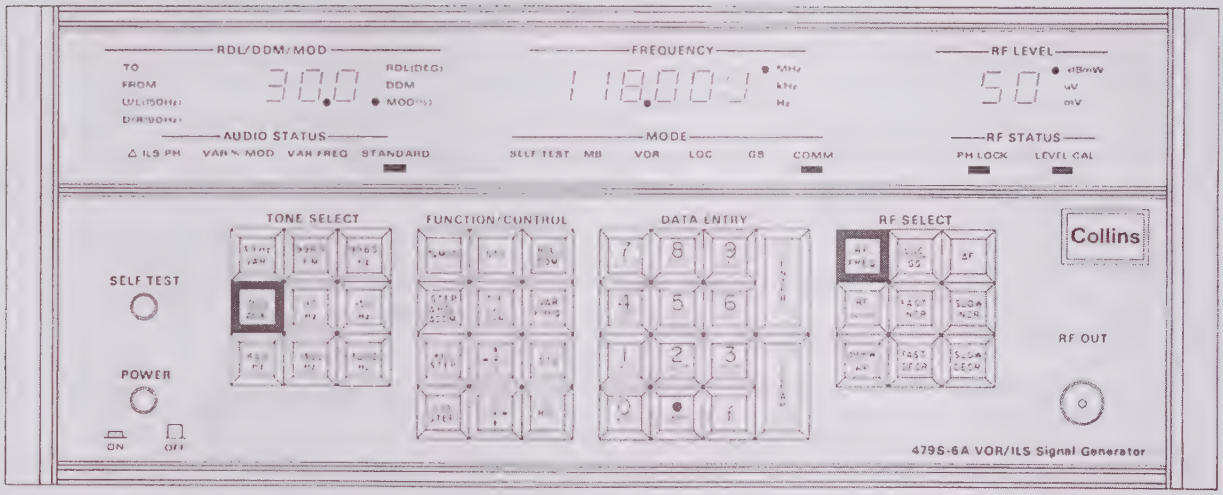

View E. VHF COMM Mode Preset Condition

Preset Conditions
Figure 7 (Sheet 3)

3.5 Off-Channel RF Frequency Selection (Refer to figure 8.)

The frequency can be varied in both directions from the selected rf carrier frequency. The frequency can be increased or decreased to ±1-channel spacing of the selected frequency to check receiver selectivity.

a. Press RF SELECT—ΔF key: key lights indicating FAST INCR, SLOW INCR, FAST DECR, and SLOW DECR, and DATA ENTRY keys are enabled to vary rf carrier frequency. Refer to views A and B. When ΔF mode is enabled, the mode selects at the REMOTE TUNE connector remain at the last selected channel frequency. FREQUENCY display changes to kHz indications, dropping the most significant numeral of the VOR, localizer, glideslope, or vhf communication frequency. Refer to view C.

b. To increase rf frequency at a fast rate, press FAST INCR key; to increase frequency at a slow rate, press SLOW INCR key. To decrease frequency, use FAST DECR and SLOW DECR keys. Refer to views A and B.

c. FREQUENCY display indicates frequency increases and decreases.

d. To vary the frequency from the DATA ENTRY keyboard:
   1. Enter selected rf frequency on DATA ENTRY numerical keys (1-kHz steps). The decimal must be entered explicitly. For example, if the selected frequency is 108.002, enter 108.002 on the DATA ENTRY keys. If an error is made during the entry and before the ENTER key is pressed, press DATA ENTRY CLEAR key to remove the incorrect entry and reenter the correct frequency.
   2. Press DATA ENTRY—ENTER key to enter selected frequency in signal generator circuits.

e. Press ΔF key again to return rf carrier frequency to the last selected channel frequency.

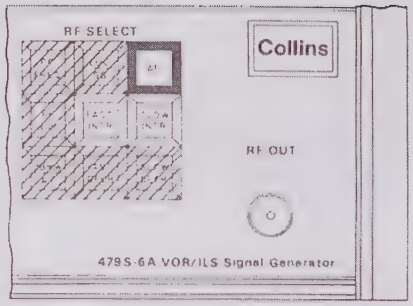

View A. Frequency Increase

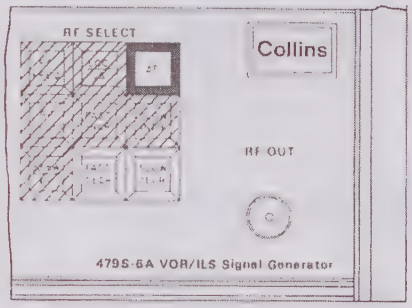

View B. Frequency Decrease

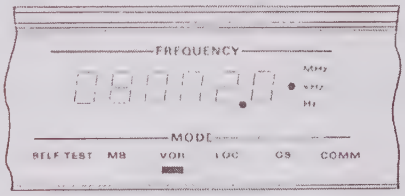

View C. Frequency Display

NOTE: SHADED KEYS INDICATE LIT KEYS.

RF Frequency Slewing
Figure 8

3.6 VOR Radial Selection and Adjustment (Refer to figure 9.)

a. Radial Selection

The VOR radial can be selected from 000.00 to 359.99 in 0.01-degree increments or on major headings at every 30 degrees.

1. Incremental Selection

(a) Check that FUNCTION/CONTROL—RDL/DDM key is lit. Refer to view A. If key is not lit, press RDL/DDM key to enable entry of selected radial through DATA ENTRY keys. RDL/DDM key lights and remains lit after the radial selection so that additional radial selections can be made. Key remains lit until either the RF SELECT—RF FREQ, the FUNCTION/CONTROL—% MOD or VAR freq, or the DATA ENTRY—f key is pressed.

(b) Enter selected VOR radial on DATA ENTRY numerical keys. Refer to view B. The decimal point must be entered explicitly. For example, if the selected radial is 301.10 degrees, enter 301.1 on the DATA ENTRY keys. If an error is made during the entry of the selected radial and before the ENTER key is pressed, press DATA ENTRY—CLEAR key to remove the incorrect entry and reenter the correct radial.

(c) Press DATA ENTRY—ENTER key to enter selected radial data in signal generator circuits.

(d) RDL/DDM/MOD display indicates the selected VOR radial in degrees and provides a FROM indication. Refer to view C. If display is blinking, the data entered is unacceptable. Press DATA ENTRY—CLEAR key to clear display and repeat steps a through c.

2. Major Heading Selection

(a) Press the DATA ENTRY—f key to enable entry of desired radial degree marked on DATA ENTRY keys. Refer to view D. The key lights when enabled. Key remains lit until the RF SELECT—RF FREQ or the FUNCTION CONTROL—% MOD, VAR FREQ, or RDL/DDM key is pressed.

(b) Press DATA ENTRY key for selected VOR radial.

(c) RDL/DDM/MOD display indicates the selected radial in degrees and provides a FROM indication.

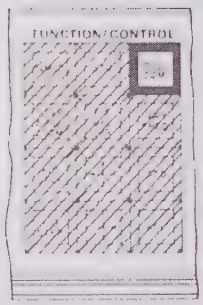

View A. Radial Selection Enable

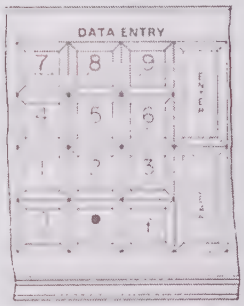

View B. Radial Selection Entry

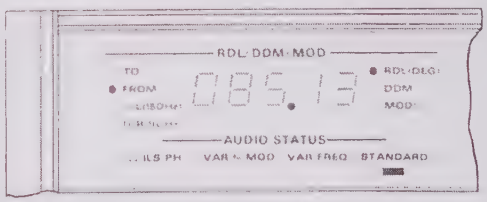

View C. Radial Display

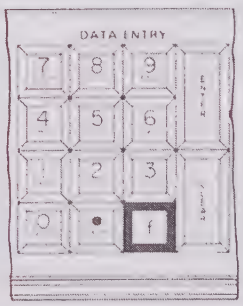

View D. Major Heading Radial Selection Entry

VOR Radial Selection and Adjustment
Figure 9 (Sheet 1 of 2)

b. Radial Adjustment

The radial is adjustable from the selected radial in +30-, +10-, -10-, +0.01-, and -0.01-degree steps. Refer to view E.

1. +30-Degree Adjustment

Press FUNCTION/CONTROL—STEP/ΔRDL/ΔDDM key once for each 30-degree-step increase required. Holding key depressed does not provide continuous 30-degree-step increases.

2. +10-Degree Adjustment

Press FUNCTION/CONTROL— +10 STEP key once for each 10-degree-step increase required. Holding key depressed does not provide continuous 10-degree-step increases.

3. -10-Degree Adjustment

Press FUNCTION/CONTROL— -10 STEP key once for each 10-degree-step decrease required. Holding key depressed does not provide continuous 10-degree-step decreases.

4. +0.01-Degree Adjustment

Press FUNCTION/CONTROL—+ Key once for each 0.01-degree-step increase required. Holding key depressed provides continuous 0.01-degree-step increases.

5. -0.01-Degree Adjustment

Press FUNCTION/CONTROL— + Key once for each 0.01-degree-step decrease required. Holding key depressed provides continuous 0.01-degree-step decreases.

d. TO-FROM Signal Switching (Refer to view G.)

Press FUNCTION/CONTROL—T/F U/L D/R key to change from a TO radial to a FROM radial, or vice versa. RDL/DDM/MOD display TO/FROM indicator changes; however, bearing display remains at the last selected bearing. Refer to view H.

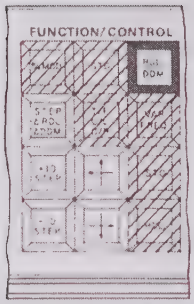

NOTE: SHADED KEYS INDICATE LIT KEYS.

View E. Radial Adjustment

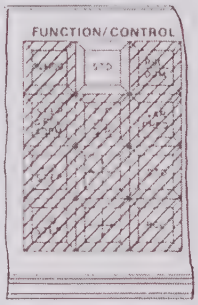

View F. Reset-to-Preset Condition

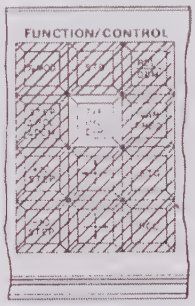

View G. TO-FROM Signal Switching

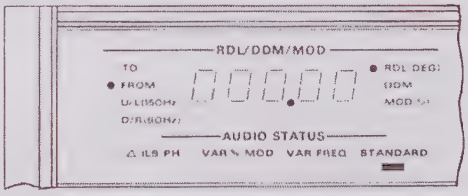

View H. TO-FROM Signal Indicator

VOR Radial Selection and Adjustment
Figure 9 (Sheet 2)

3.7 VOR Mode Tone Selections (Refer to figure 10.)

a. In the preset condition, 30-Hz variable and 9960-Hz FM (30-Hz reference) are selected and the TONE SELECT—30 Hz VAR and 9960 FM keys are lit. Either signal or both signals can be removed for flag checks or other test requirements by pressing the applicable key. The key light is turned off when the signal is removed. Press key again to add the removed signal. Refer to view A.

b. To obtain a 9960-Hz-only signal (30-Hz reference removed) for flag or other receiver checks, press TONE SELECT—9960 Hz key. 9960 Hz key lights and 9960 FM key light goes out. Press 9960 FM key to return to 9960 FM signal containing 30-Hz reference.

c. 30-Hz/9960-Hz Adjustments (Refer to view B.)

The 30-Hz and 9960-Hz TONES are adjustable ±5 percent. The 9960-Hz tone frequency varies automatically when a change is made to the 30-Hz VAR tone frequency.

1. Press the FUNCTION CONTROL—VAR FREQ key. The key will light and the VAR FREQ indicator will light. Press STD key to turn off.
2. Press the TONE SELECT—30-Hz VAR key. The 30-Hz frequency will be displayed.
3. Enter new selected frequency on DATA ENTRY numerical keys. The decimal point must be entered explicitly. For example, if 31.50 is to be entered, enter 31.5 on the DATA ENTRY keys. If an error is made during the entry and before the ENTER key is pressed, press CLEAR key to remove incorrect entry and reenter correct frequency. Press DATA ENTRY—ENTER key to enter selected frequency in signal generator circuits.
4. New frequency will be displayed. To observe frequency of the 9960-Hz tone, press TONE SELECT—9960 FM or 9960 Hz keys.

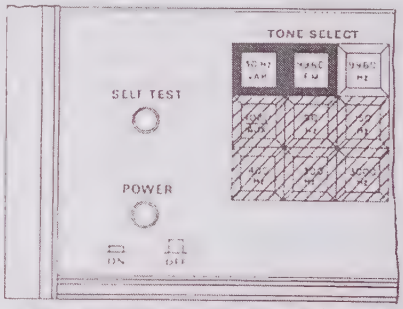

View A. 30-Hz/9960-Hz Tone Selection

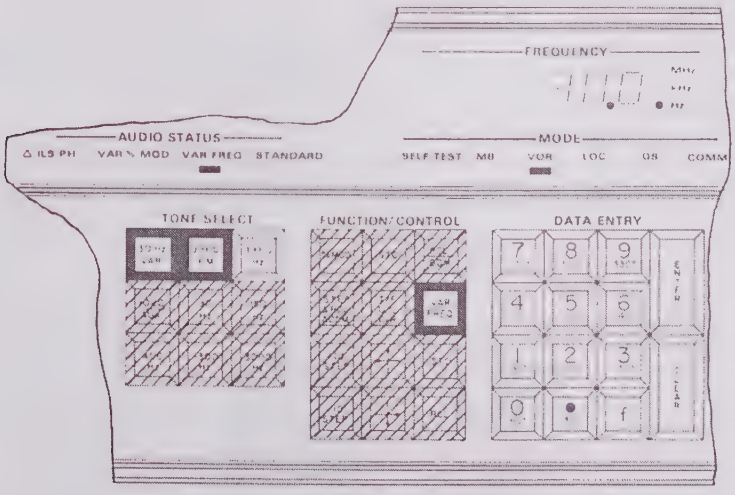

NOTE: SHADED KEYS INDICATE LIT KEYS.

View B. 30-Hz/9960-Hz Adjustment

VOR Mode Tone Selection
Figure 10 (Sheet 1 of 2)

d. Audio Tone Addition

A preset 1020-Hz or an auxiliary 30-Hz to 14-kHz audio tone may be added to the VOR signal. For special test purposes, 10- to 30-Hz audio tones may also be added. Refer to view C.

1. Preset 1020-Hz Audio Tone

Press TONE SELECT—1020/AUX key. Key lights and a 1020-Hz audio tone is added to the VOR signal if VAR FREQ key is not lit. Press key again to remove signal. If VAR FREQ key is pressed while the 1020 Hz is on, the 1020-Hz will then go off.

2. AUX (10-Hz to 14-kHz) AUDIO TONE

(a) Press FUNCTION/CONTROL—VAR FREQ key. Key lights and VAR FREQ indicator lights. Press STD key to turn off.

(b) Press TONE SELECT—1020/AUX key. Key lights and a 1000-Hz audio tone is added to the VOR signal and displayed on the FREQUENCY indicator. To turn off AUX audio tone, depress FUNCTION/CONTROL—VAR FREQ key followed by TONE SELECT—1020/AUX key.

(c) Frequency Adjustments

The frequency can be adjusted from 30 Hz to 14 kHz. Entries that would exceed the range cause the FREQUENCY indicator to flash and the AUX frequency to remain at last valid entry. Pressing any front panel key causes flashing to cease.

Note

Entries from 10 to 30 Hz are also allowed for special test purposes and will not cause the FREQUENCY indicator to flash.

(1) Frequency Selection

Enter selected audio frequency on DATA ENTRY numerical keys. The decimal point must be entered explicitly. Frequencies can be entered in 0.1-Hz increments below 1 kHz and 1-Hz increments above 1 kHz. For example, if 25.5 Hz is desired, enter 25.5 on the DATA ENTRY keys. If an error is made during the entry and before the ENTER key is pressed, press CLEAR key to remove incorrect entry and reenter correct frequency. Press DATA ENTRY—ENTER key to enter selected audio frequency in signal generator circuits.

(2) AUX Audio Frequency Slewing

Press FUNCTION/CONTROL— +|- key once for each step increase desired. Holding key depressed provides continuous frequency increase. Slewing is in 1.0-Hz steps above 1000 Hz and in 0.1-Hz steps below 1000 Hz.

Press FUNCTION/CONTROL— -|+ key once for each step decrease desired. Holding key depressed provides continuous frequency decrease. Slewing is in 1.0-Hz steps above 1000 Hz and in 0.1-Hz steps below 1000 Hz.

Note

Adjusting AUX audio above 3000 Hz deletes standard VOR tones, if present.

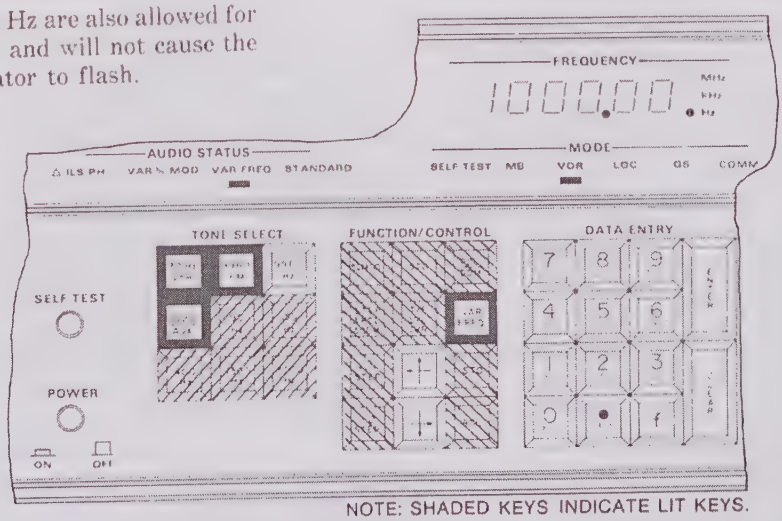

View C. Audio Tone Selection

VOR Mode Tone Selection
Figure 10 (Sheet 2)

3.8 ILS DDM Selection and Adjustment (Refer to figure 11.)

In the localizer and glideslope modes, the DDM is preset to 0.000 or the beam center. The DDM is selectable in 0.001-steps within a specific range for each mode, adjustable in standard steps, and can be slewed continuously in either direction. Table 10 is a list of the standard DDM steps, the DDM selection range, and the slewing increments for each mode of operation.

In the ILS modes, the RDL/DDM/MOD—U/L (150-Hz) and D/R (90-Hz) indicators will indicate which of the ILS signals is predominant (has the larger amplitude.) For example, when the U/L (150-Hz) indicator is lit, the 150-Hz signal is predominant.

Table 10. DDM Increments, Steps, and Ranges

MODE	PRESET CONDITION	STD DDM STEPS	SELECTION RANGE	SLEWING INCREMENTS
Localizer	0.000	0.000, ±0.046, ±0.093, ±0.155, ±0.200	0.000 to ±0.400	0.001
Glideslope	0.000	0.000, ±0.045, ±0.091, ±0.175, ±0.400	0.000 to ±0.800	0.002

Different but equivalent terminology is used between generations of test equipment used for testing ILS Receivers. Table 11 provides the necessary information for conversion between DDM factors commonly used and ratio of audio tones expressed in dB. Additionally, equivalent percent amplitude modulation levels and nominal receiver microamp levels are provided.

Table 11. ILS Tone Ratio DDM Conversion Chart.

[*Note*]

The following information explains how table 11 values were obtained:

(1) Conversion of any tone ratio (expressed in dB) to the equivalent difference in depth of modulation (DDM) is accomplished as follows:

(a) Convert dB to ratio

$$R = 10^{X}, \text{ where } x = \frac{dB}{20}$$

(b) Calculate

$$DDM = M \times \frac{R - 1}{R + 1}$$

where M = modulation peak expressed as a decimal.

(c) $DDM_{(LOC)} = 0.4 \times \frac{R - 1}{R + 1}$

(d) $DDM_{(GS)} = 0.8 \times \frac{R - 1}{R + 1}$

Table 11. ILS Tone Ratio/DDM Conversion Chart (Cont).

(2) Calculating theoretical receiver output deflection given a DDM is accomplished as follows:

(a) $\mu A_{(LOC)}$ = DDM x 967.7

(b) $\mu A_{(GS)}$ = DDM x 857.1

(3) Computing modulation percentages given a DDM is accomplished as follows:

(a) % mod larger (LOC) = 20 + 50 x DDM

mod smaller (LOC) = 20 - 50 x DDM

(b) % mod larger (GS) = 40 + 50 x DDM

mod smaller (GS) = 40 - 50 x DDM

(c) Additionally, a simple thought process procedure can be used to determine mod % given a DDM.

1. Move the decimal two places to the right.
2. Divide by 2.
3. Add to 20 (LOC) or 40 (GS). This result is the mod % of the larger tone.
4. Subtract the mod % of the larger tone from 40 (LOC) or 80 (GS) to get the mod % of the smaller tone.

TONE	LOCALIZER (LOC)			GLIDESLOPE (GS)		
RATIO (dB)	*DDM	$\left(\frac{\% \text{ MOD}}{\text{LARGER}}{\text{SMALLER}}\right)$	RCVR DEFLECTION (μA)	*DDM	$\left(\frac{\% \text{ MOD}}{\text{LARGER}}{\text{SMALLER}}\right)$	RCVR DEFLECTION (μA)
0.0	0.000	$\frac{20.00}{20.00}$	0	0.000	$\frac{40.00}{40.00}$	0
0.5	0.012	$\frac{20.58}{19.42}$	12	0.023	$\frac{41.15}{38.85}$	20
0.98	0.023	$\frac{21.13}{18.87}$	22	0.045	$\frac{42.25}{37.75}$	39
1.98	0.0456	$\frac{22.28}{17.72}$	44	0.091	$\frac{44.55}{35.45}$	78
2.00	0.0458	$\frac{22.29}{17.71}$	44	0.092	$\frac{44.59}{35.41}$	79
2.01	0.046	$\frac{22.30}{17.70}$	45	0.092	$\frac{44.60}{35.40}$	79
3.86	0.087	$\frac{24.37}{15.63}$	84	0.175	$\frac{48.75}{31.25}$	150
4.00	0.091	$\frac{24.53}{15.47}$	88	0.181	$\frac{49.05}{30.95}$	155
4.11	0.093	$\frac{24.65}{15.35}$	90	0.186	$\frac{49.30}{30.70}$	159
7.10	0.155	$\frac{27.75}{12.25}$	150	0.310	$\frac{55.50}{24.50}$	266

Table 11. ILS Tone Ratio/DDM Conversion Chart (Cont).

TONE	LOCALIZER (LOC)			GLIDESLOPE (GS)		
RATIO (dB)	*DDM	(% MOD LARGER / SMALLER)	RCVR DEFLECTION (μA)	*DDM	(% MOD LARGER / SMALLER)	RCVR DEFLECTION (μA)
7.50	0.163	28.14 / 11.86	158	0.325	56.27 / 23.73	279
9.54	0.200	30.00 / 10.00	194	0.400	60.00 / 20.00	343
∞	0.400	40.00 / 00.00	387	0.800	80.00 / 00.00	686

*DDM (Difference in Depth of Modulation) - the larger percent (%) of modulation less the smaller percent (%) of modulation divided by 100.

NOTE: 150-Hz tone predominant: localizer is left, glideslope is up;
90-Hz tone predominant: localizer is right, glideslope is down.

a. Standard DDM Adjustments

1. Press FUNCTION/CONTROL— STEP ΔRDL ΔDDM key for each standard DDM step required. Refer to view A. The DDM cycles through each standard DDM step and back to 0.000. Each change of DDM step requires pressing the STEP ΔRDL ΔDDM key. When activated, the FUNCTION/CONTROL—STEP ΔRDL ΔDDM key steps the DDM in the U/L (150-Hz) direction unless the D/R (90-Hz) indicator is lit. If the D/R (90-Hz) indicator is lit, the DDM steps in the D/R (90-Hz) direction until maximum deviation is reached and the next step returns the DDM to 0.000 or beam center. At beam center, the DDM returns to a U/L (150-Hz) signal and indication and remains in the U/L (150-Hz) condition until D/R (90 Hz) is again selected.
2. RDL/DDM/MOD display indicates DDM step and U/L (150-Hz) indicator is lit. Refer to view B.

b. DDM Slewing

Press and hold FUNCTION/CONTROL ← key to slew the DDM up/left or the → key to slew the DDM down/right. Refer to view A. In the localizer mode, the DDM varies in 0.001 steps; in the glideslope mode, the DDM varies in 0.002 steps.

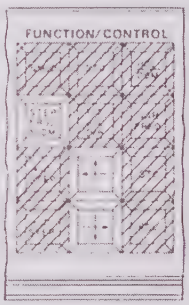

View A. Standard DDM Step and Slewing Keys

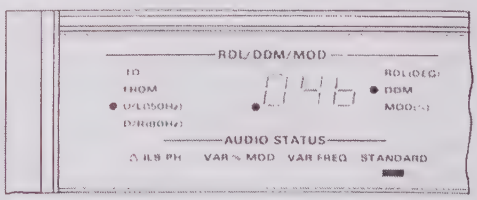

View B. DDM Display

ILS DDM Selection and Adjustment
Figure 11 (Sheet 1 of 5)

c. DDM Selection

The DDM is selectable in 0.001 increments. In the localizer mode, the DDM is selectable from 0.000 to ±0.400; in the glideslope mode, the DDM is selectable from 0.000 to ±0.800.

1. Press FUNCTION/CONTROL—RDL/DDM key to enable entry of DDM selection through DATA ENTRY keys. Refer to view C. The key lights when DDM entry is enabled and remains lit for additional entries until either the % MOD, VAR FREQ, RF SELECT—RF FREQ, or DATA ENTRY—f key is pressed.
2. Enter selected DDM on DATA ENTRY numerical keys. The decimal point must be entered explicitly. For example, if 0.040 is to be entered, enter .04 on the DATA ENTRY keys. If an error is made during the entry and before the ENTER key is pressed, press CLEAR key to remove incorrect entry and reenter correct DDM.
3. Press DATA ENTRY—ENTER key to enter selected DDM in signal generator circuits.
4. RDL/DDM/MOD display indicates selected DDM. If display is blinking, the data entered is unacceptable. Press DATA ENTRY—clear key to clear display and repeat steps 2 through 4.

d. Return to Preset Condition

Press FUNCTION/CONTROL—STD key and signal generator returns RDL/DDM/MOD display information to preset condition for selected mode. Refer to view D.

e. DDM Balance Check Adjustments

On beam center (0.000 DDM), neither the U/L (150-Hz) or D/R (90-Hz) tone is predominant. However, the RDL/DDM/MOD display U/L (150-Hz) indicator is lit to indicate the direction the DDM will go when the DDM is changed via step, slew, or keyboard selection. The DDM is changed in direction by the FUNCTION/CONTROL—T/F U/L D/R key. Refer to view E. A DDM of at least 0.001 must be selected before the ILS signal can be switched to D/R (90 Hz). The signal remains D/R (90 Hz) while being stepped until maximum deviation is reached. The next step returns the DDM to beam center (0.000 DDM). When the beam center is reached, the ILS signal switches back to U/L (150 Hz). Perform balance check as follows:

1. Set signal generator to required DDM by stepping DDM, slewing DDM, or selecting DDM through DATA ENTRY keys.

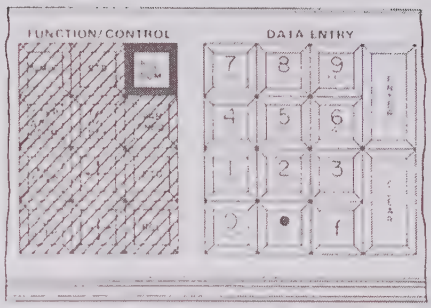

NOTE: SHADED KEYS INDICATE LIT KEYS.

View C. DDM Selection

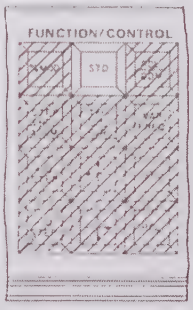

View D. Return-to-Preset Condition

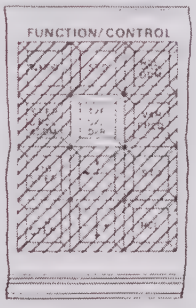

View E. DDM Balance Adjustment

ILS DDM Selection and Adjustment
Figure 11 (Sheet 2)

2. Press FUNCTION/CONTROL—T/F U/L D/R key to switch DDM to D/R (90 Hz).
3. Change DDM to next required DDM either by stepping, slewing, or keyboard selection.
4. Press FUNCTION/CONTROL—T/F U/L D/R key to switch DDM to U/L (150 Hz).

Note

The above procedures are typical for discussion of signal generator operation and can be varied as required during actual receiver testing.

f. ILS Phase Adjustment (Refer to view F.)

1. The phase between the 90- and 150-Hz signals can be varied in either localizer or glideslope modes. Press DATA ENTRY—f key to enable phase shift. Key will light.
2. Depress DATA ENTRY $\frac{0}{60°}$ key to produce an ILS composite signal with a 60-degree phase shift between the 90- and 150-Hz signals. (Phase shift equals 60 degrees of the 150-Hz component, measured between positive-going zero crossings.) The AUDIO STATUS—ILS PH indicator lights when the phase shift is entered.
   (a) DDM's may be entered from the keyboard. When entered from keyboard, press FUNCTION CONTROL—$\frac{\text{RDL}}{\text{DDM}}$ to turn off DATA ENTRY—f and then make entry.
   (b) When stepping DDM's, DATA ENTRY—f key can stay on. Press FUNCTION CONTROL—STD key or DATA ENTRY—$\frac{0}{60°}$ key to disable phase shift.

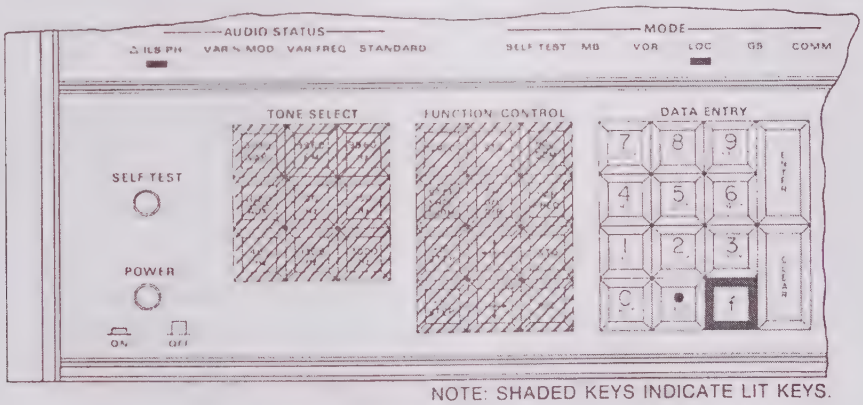

View F. ILS Phase Adjustment

g. Removal of 90- or 150-Hz Audio Modulation for Flag Check

Either the 90- or 150-Hz ILS audio tone or both tones can be removed to perform a flag check or for other tests. Press the TONE SELECT—90-Hz or 150-Hz key to remove the applicable audio modulation. When the modulation is off, the key light turns off. To turn on the modulation, press the applicable key. Refer to view G.

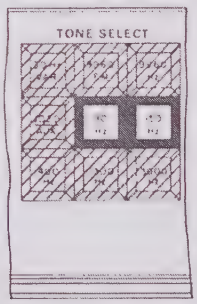

View G. 90-Hz/150-Hz Removal

ILS DDM Selection and Adjustment
Figure 11 (Sheet 3)

h. Adjusting the 90- and 150-Hz Audio Modulation Frequency

The 90- and 150-Hz frequencies are variable ±5 percent. Refer to view H.

1. Press the FUNCTION/CONTROL—VAR FREQ key. The key will light and the VAR FREQ indicator will light.
2. Press the TONE SELECT 90-Hz or 150-Hz keys to select desired frequency. The selected frequency will be displayed.
3. The tones may be deleted or added in the variable frequency mode by depressing the VAR FREQ key again. The signal generator will remain in the variable frequency mode. To make subsequent changes depress VAR FREQ key again.
4. Enter selected frequency on DATA ENTRY numerical keys. The decimal point must be entered explicitly. For example, if 92.5 Hz is desired, enter 92.5 on the DATA ENTRY keys. If an error is made during the entry and before the ENTER key is pressed, press CLEAR key to remove incorrect entry and reenter correct frequency. Press DATA ENTRY ENTER key to enter selected frequency in signal generator circuits.
5. New frequency will be displayed. To observe frequency of other tone, press TONE SELECT 90-Hz and 150-Hz keys to select other tone. Adjusting either tone will cause a corresponding change in the other. For example, changing 90-Hz 2 percent to 91.8 will cause the 150-Hz to also change 2 percent to 153-Hz.

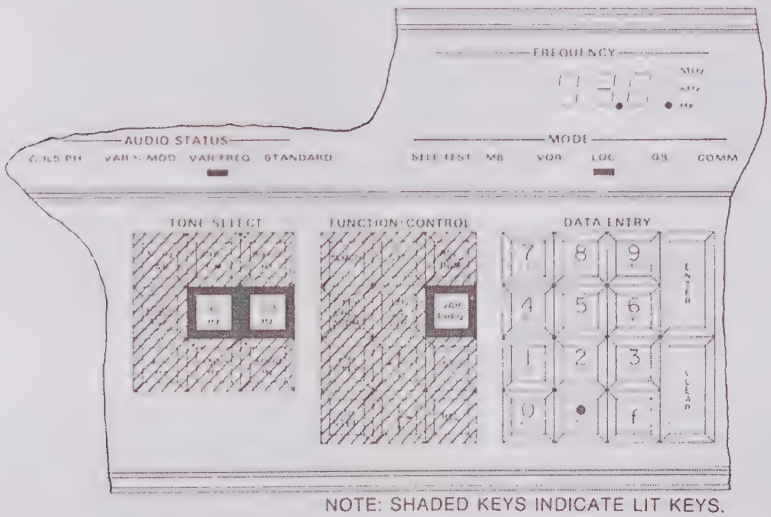

View H. 90-Hz/150-Hz Adjustments

ILS DDM Selection and Adjustment
Figure 11 (Sheet 4)

i. Audio Tone Addition

A preset 1020-Hz or an auxiliary 30-Hz to 4-kHz audio tone may be added to the localizer signal. For special test purposes 10- to 30-Hz and 4- to 10-kHz audio tones may also be added. The preset 1020-Hz audio tone cannot be added to the glideslope signal. Refer to view I.

1. Preset 1020-Hz Audio Tone (Localizer Only)

Press TONE SELECT 1020/AUX key. Key lights and a 1020-Hz audio tone is added to the localizer signal if VAR FREQ key is not lit. Press key again to remove audio tone.

2. AUX (30-Hz to 4-kHz) Audio Tone

(a) Press FUNCTION/CONTROL—VAR FREQ key. Key lights and VAR FREQ indicator lights. Press STD key to turn off.

(b) Press TONE SELECT 1020/AUX key. Key lights and a 1000-Hz audio tone is added to the localizer or glideslope signal and displayed on the FREQUENCY indicator. To turn off AUX audio tone, depress FUNCTION/CONTROL—VAR FREQ key followed by TONE SELECT 1020/AUX key. If VAR FREQ is pressed while 1020 is on, the 1020 will go off.

(c) Frequency Adjustments

The frequency can be adjusted from 30 Hz to 4 kHz. Entries that would exceed the range cause the FREQUENCY indicator to flash and AUX frequency to remain at last valid entry. Pressing any front panel key causes flashing to cease.

Note

Entries from 10 to 30 Hz and from 4 to 10 kHz are also allowed for special test purposes and will not cause the FREQUENCY indicator to flash.

(1) Frequency Selection

Enter selected audio frequency on DATA ENTRY numerical keys. The decimal point must be entered explicitly. For example, if 25.5 Hz is desired, enter 25.5 on the DATA ENTRY keys. If an error is made during the entry and before the ENTER key is pressed, press CLEAR key to remove incorrect entry and reenter correct frequency. Press DATA ENTRY—ENTER key to enter selected audio frequency in signal generator.

(2) AUX Audio Frequency Slewing

Press FUNCTION/CONTROL—◄╋►key once for each step increase desired. Holding key depressed provides continuous frequency increase. Slewing is in 1.0-Hz steps above 1000 Hz and in 0.1-steps below 1000 Hz. Press FUNCTION/CONTROL—►╋◄key once for each step decrease desired. Holding key depressed provides continuous frequency decrease. Slewing is in 1.0-Hz steps above 1000 Hz and in 0.1-Hz steps below 1000 Hz.

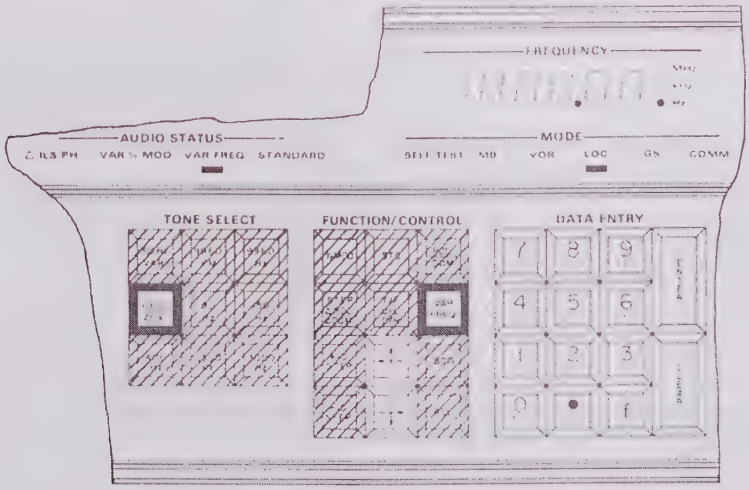

NOTE: SHADED KEYS INDICATE LIT KEYS.

View I. Audio Tone Selection

ILS DDM Selection and Adjustment
Figure 11 (Sheet 5)

3.9 Marker Beacon Marker Selection (Refer to figure 12.)

The outer beacon marker (400 Hz) is automatically selected when a marker beacon frequency is selected and the signal generator is placed in the preset condition for the marker beacon mode. Refer to view A.

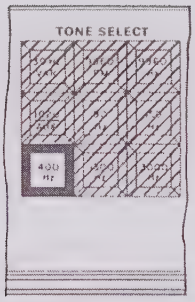

View A. Outer Marker Selection

a. Selection of Middle Marker*

Press TONE SELECT—1300 Hz key and key lights. The 400-Hz and 3000-Hz keys are not lit. Refer to view B.

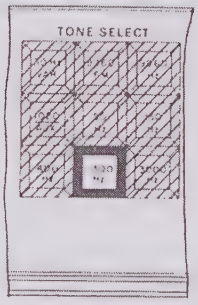

View B. Middle Marker Selection

b. Selection of Inner Marker*

Press TONE SELECT—3000 Hz key and key lights. The 400-Hz and 1300-Hz keys are not lit. Refer to view C.

c. Selection of Outer Marker*

Press TONE SELECT—400 Hz key and key lights. The 1300-Hz and 3000-Hz keys are not lit. Refer to view A.

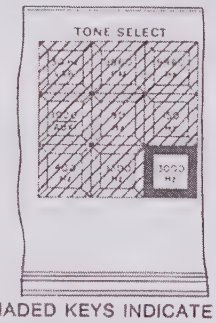

NOTE: SHADED KEYS INDICATE LIT KEYS.

View C. Inner Marker Selection

Marker Beacon Tone Selection
Figure 12 (Sheet 1 of 2)

*All marker beacon tones may be removed if desired.

d. AUX Tone Selection

An auxiliary audio tone may be used in place of the standard audio marker beacon frequencies for specialized tests. Refer to view D.

1. Press FUNCTION/CONTROL—VAR FREQ key. Key lights and VAR FREQ indicator lights.
2. TONE SELECT—1020/AUX key lights, the preset 400-, 1300-, or 3000-Hz tone is automatically deleted (if present) and a 1000-Hz audio tone replaces the marker beacon signal and is displayed on the FREQUENCY indicator.
3. Frequency Adjustments

   The frequency can be adjusted from 100 Hz to 4000 Hz. Entries that would exceed the range cause the FREQUENCY indicator to flash and AUX frequency to remain at last valid entry. Pressing any front panel key causes flashing to cease.

Note

Entries from 10 to 100 Hz and from 4 to 10 kHz are also allowed for special test purposes and will not cause the FREQUENCY indicator to flash.

(a) Frequency Selection

Enter selected audio frequency on DATA ENTRY numerical keys. The decimal point must be entered explicitly. For example, if 375.5 Hz is desired, enter 375.5 on the DATA ENTRY keys. Of an error is made during the entry and before the ENTER key is pressed, press CLEAR key to remove incorrect entry and reenter correct frequency.

(b) AUX Audio Frequency Slewing

Press FUNCTION/CONTROL ↑ key once for each step increase desired. Holding key depressed provides continuous frequency increase. Slewing is in 1.0-Hz steps above 1000 Hz and in 0.1-Hz steps below 1000 Hz. Press FUNCTION/CONTROL ↓ key once for each step decrease desired. Holding key depressed provides continuous frequency decrease. Slewing is in 1.0-Hz steps above 1000 Hz and in 0.1-Hz steps below 1000 Hz.

e. Interference Check

The standard marker ground station frequency is 75.000 MHz. In the marker beacon mode, the signal generator is capable of producing rf frequencies from 74.6 to 75.4 MHz to provide generation of interference-type signals. Signal frequencies are selected through the DATA ENTRY keys.

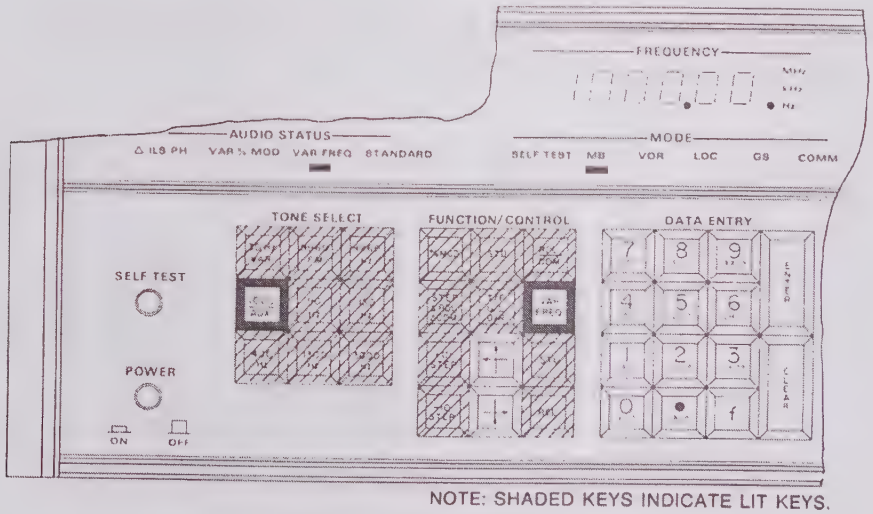

View D. AUX Tone Selection

Marker Beacon Tone Selection
Figure 12 (Sheet 2)

3.10 Communication Mode Tone Selection (Refer to figure 13.)

The 1020-Hz tone is automatically selected when a communication rf frequency is selected and the signal generator is placed in the preset condition for communication mode. An auxiliary audio tone may be used in place of the 1020-Hz tone.

a. Selection of AUX Tone

Press FUNCTION/CONTROL—VAR FREQ key. Key lights, VAR FREQ indicator lights, 1020/AUX key lights (if off), and a 1000-Hz audio tone is displayed on the FREQUENCY indicator. To turn off AUX audio tone, depress FUNCTION/CONTROL—VAR FREQ key followed by TONE SELECT—1020/AUX key.

b. AUX Tone Frequency Adjustments

The AUX tone may be varied from 30 Hz to 10 kHz. Entries that would exceed the range cause the FREQUENCY indicator to flash and AUX frequency to remain at last valid entry. Pressing any front panel key causes flashing to cease.

Note

Entries from 10 to 30 Hz are also allowed for special test purposes and will not cause the FREQUENCY indicator to flash.

1. Frequency Selection

Enter selected audio frequency on DATA ENTRY numerical keys. The decimal point must be entered explicitly. For example, if 375.5 Hz is desired, enter 375.5 on the DATA ENTRY keys. If an error is made during the entry and before the ENTER key is pressed, press CLEAR key to remove incorrect entry and reenter correct frequency.

2. AUX Audio Frequency Slewing

Press FUNCTION CONTROL ◄┼► key once for each step increase desired. Holding key depressed provides continuous frequency increase. Slewing is in 1.0-Hz steps above 1000 Hz and in 0.1-Hz steps below 1000 Hz. Press FUNCTION CONTROL ◄┼► key once for each step decrease desired. Holding key depressed provides continuous frequency decrease. Slewing is in 1.0-Hz steps above 1000 Hz and in 0.1-Hz steps below 1000 Hz.

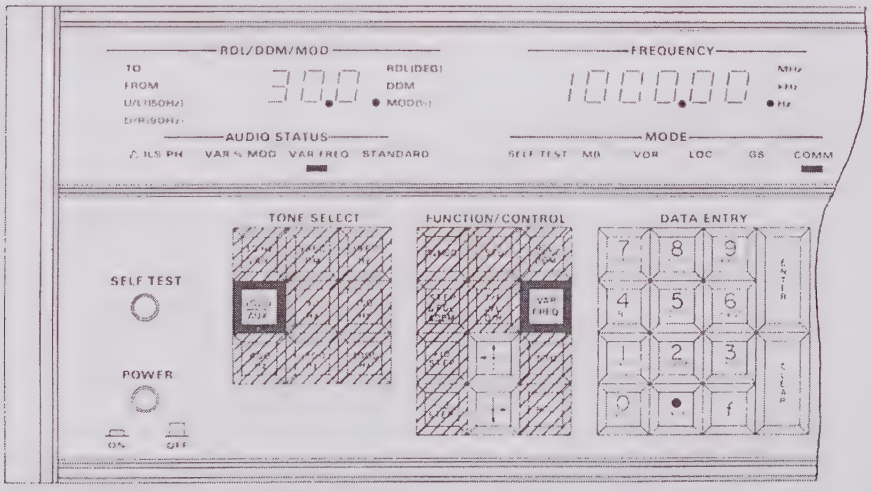

COMM Mode AUX Tone Selection
Figure 13

3.11 Percent Modulation Adjustment (Refer to figure 11.)

In the preset condition for each mode of operation, the percent modulation is set to the accepted standard. The percent modulation can be varied from the standard in both directions in 0.1-percent steps. Table 12 lists the percent modulation for the preset condition and variable range with respect to each mode of operation.

Note

The 1020-Hz audio tone amplitude modulation is a fixed 30 percent in the VOR localizer and vhf communication modes. The 1020-Hz tone is not present in the glideslope or marker beacon mode.

Table 12. Percent Modulation Chart

MODE	PERCENT MODULATION	
	PRESET CONDITION	VARIABLE RANGE
VOR		
30 Hz VAR	30.0	5.0 to 35.0
9960 Hz FM	30.0	5.0 to 35.0
AUX audio	30.0	5.0 to 35.0
Localizer		
90/150 Hz	20.0	5.0 to 40.0
AUX audio	30.0	5.0 to 30.0
Glideslope		
90/150 Hz	40.0	10.0 to 80.0
AUX audio	30.0	10.0 to 60.0
Marker Beacon		
400/1300/3000 Hz	95.0	15.0 to 97.0
AUX audio	95.0	15.0 to 97.0
Communication		
AUX audio	30.0	5.0 to 35.0

a. Press FUNCTION/CONTROL—% MOD key to enable entry of data through the DATA ENTRY keys. Refer to view A. The key lights when percent modulation data entry is enabled and remains lit until the FUNCTION/CONTROL—RDL/DDM, VAR FREQ, or STD key, the RF SELECT—RF FREQ key or DATA ENTRY—f key is pressed.

b. RDL/DDM/MOD display indicates percent modulation for the preset condition. In marker beacon and communication mode, the percent modulation is displayed on the selection of the marker beacon or a communication rf frequency without pressing the % MOD key. Refer to view B.

c. The AUDIO STATUS—VAR % MOD indicator lights indicating the generator is in the variable % modulation mode.

d. Press TONE SELECT key for the desired tone. In the VOR mode, upon initial selection of % MOD with both 30-Hz VAR and 9960-Hz selected (on) the modulation of both tones may be adjusted simultaneously if neither tone select key is pressed. Pressing either the 30-Hz VAR, 9960 FM, or 9960 Hz TONE SELECT key will enable individual tone mdoulation. The FREQUENCY display will indicate the modulating frequency to be adjusted. In localizer or glideslope modes, the 90/150-Hz tones are always adjusted simultaneously.

e. Enter selected percent modulation on DATA ENTRY numerical keys. Refer to view C. The decimal point entry must be entered explicitly. For example, if 27.8 percent modulation is desired, enter 27.8 on the DATA ENTRY keys. If an error is made during the entry of the selected percent modulation and before the ENTER key is pressed, press DATA ENTRY—CLEAR key to remove incorrect entry, and reenter correct percent modulation.

f. Press DATA ENTRY—ENTER key to enter selected percent modulation in signal generator circuits.

g. RDL/DDM/MOD display indicates the selected percent modulation. If display is flashing, the data entered is unacceptable. Press DATA ENTRY—CLEAR key to clear display, and repeat steps d through f.

Note

Depressing the FUNCTION/CONTROL—VAR FREQ key will cause % MOD key to extinguish and enable DATA ENTRY key for frequency adjustment.

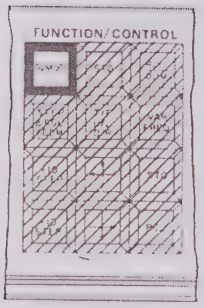

View A. Percent Modulation Enable

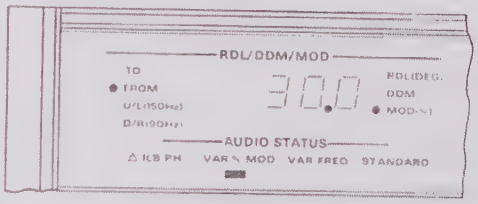

View B. Percent Modulation Display and Audio Status

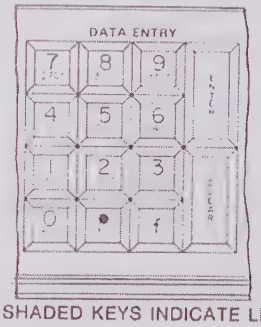

NOTE: SHADED KEYS INDICATE LIT KEYS.

View C. Percent Modulation Data Entry

Percent Modulation Adjustment
Figure 14

h. If it is desired to return the signal generator to the preset condition, press FUNCTION/CONTROL—STD key.

3.12 External Modulation Operation

The external modulation feature allows the operator to externally module the selected rf carrier frequency.

a. Select desired rf carrier frequency.
b. Connect an ac voltmeter to rear DEMOD BNC connector.
c. Select one preset tone on TONE SELECT keyboard.
d. Record level of ac voltmeter.
e. Delete tone selected in step c.
f. Connect modulating source to rear EXT MOD BNC connector and select desired frequency. (Refer to description section for limits.) Adjust level of modulating source until reading on ac voltmeter agrees with that recorded in step d. The percentage modulation of the external signal is now equal to that of the preset tone selected in step c.
g. To vary the modulation percentage, divide the desired modulation percentage by the preset modulation percentage of step c tone and then multiply by the ac reading of step d. The modulating source level is then adjusted until the ac voltmeter reads this new value.

Note

Steps b through g are accurate for modulation levels up to 85 percent. For levels above 85 percent and/or greater accuracy, an external modulation meter may be connected to the front panel rf connector. The external modulating source amplitude is then adjusted to produce the desired modulation percentage. Delete internal tones when setting.

3.13 Scope Trigger Operation

The scope trigger feature allows the operator to make time response measurements. An output pulse is provided coincident with any front panel keystroke. The output pulse is a positive going TTL compatible pulse approximately 8 μs in width. Output is available on rear panel REMOTE TUNE connector, pin 31.

3.11 Store Recall Selection (Operational only on 1798-6A's with option 1 or 2 incorporated.)

a. Entry of DATA in Storage (Refer to figure 15, view A)

1. Select desired setup as described in previous paragraphs.
2. Press FUNCTION/CONTROL—STO key. The key light will come on. Any other modifier key that is lit will go out.
3. Press two DATA ENTRY keys for desired memory location, 00 to 99. Two keys must be selected to enter data in memory; for example, if memory number 03 is to be selected, enter 03 on the DATA ENTRY keys.
4. Data will be entered into storage and STO light will go out. A flashing STO light indicates incorrect storage or a faulty memory location. Pressing any front panel key will cause the light to cease flashing.

b. Recalling of Data From Storage (Refer to figure 15, view B).

1. PRESS FUNCTION/CONTROL—RCL key. The key light will come on.
2. Press two DATA ENTRY keys for memory location desired to recall. Two keys must be selected to recall data in memory; for example, if memory number 03 is to be recalled, enter 03 on the DATA ENTRY keys.
3. Additional memory locations can be recalled by entering the 2-digit memory location on the DATA ENTRY keyboard as long as the RCL key is lit. To extinguish the light, select any other function requiring use of the DATA ENTRY keyboard.

c. Revising Data Stored in Memory

Perform procedure for entering data in storage.

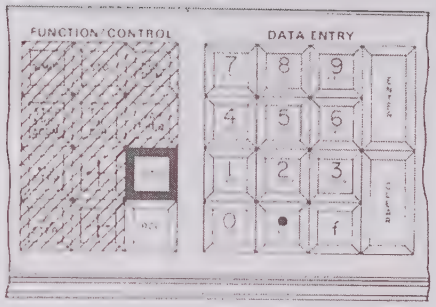

View A. Entry of Data in Storage

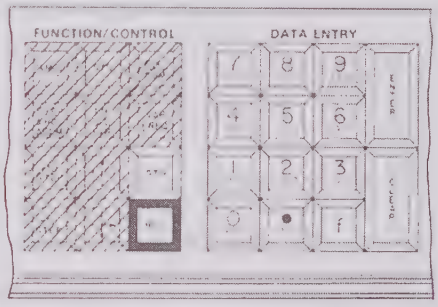

NOTE: SHADED KEYS INDICATE LIT KEYS.

View B. Recall of Data From Storage

Store/Recall Selection
Figure 15

3.15 IEEE Operation (Optional only on 1798-6A's with option 2 or 3 incorporated).

3.15.1 General

This paragraph provides operational instructions for the IEEE Interface Card A10. Paragraph 3.15.2 applies only to 1798-6A units with A10 CPN 601-5883-001. Paragraph 3.15.3 applies to 1798-6A units with A10 CPN 601-2309-001.

Because IEEE bus data lines D6 and D7 are not decoded while an address byte appears on the bus, certain talk/listen addresses cannot be distinguished from the following addressed or universal commands.

ADDRESSED COMMANDS		UNIVERSAL COMMANDS	
GTL	go to local	LLO	local lockout
SDC	selected device clear	DCL	device clear
PPC	parallel poll configure	PPU	parallel poll unconfigure
GET	group execute trigger	SPE	serial poll enable
TCT	take control	SPD	serial poll disable

Table 13 contains the talk/listen addresses which should be avoided when configuring for IEEE bus operations.

Table 1. Restricted Addresses for 1798-6A

IEEE DATA BUS							LISTEN ADDRESS	TALK ADDRESS
D7	D6	D5	D4	D3	D2	D1		
X	X	0	0	0	0	1	[illegible]	A
X	X	0	0	1	0	0	8	D
X	X	0	0	1	0	1	[illegible]	E
X	X	0	1	0	0	0	[illegible]	H
X	X	0	1	0	0	1	[illegible]	I
X	X	1	0	0	0	1	1	Q
X	X	1	0	1	0	0	4	T
X	X	1	0	1	0	1	5	U
X	X	1	1	0	0	0	8	X
X	X	1	1	0	0	1	9	Y

3.15.2 IEEE Operation for Units with A10 CPN 601-5883-001 Installed

The signal generator may be remotely controlled via the IEEE standard digital interface for programmable instrumentation (IEEE STD-488/1975).

a. General

In general, the signal generator may be programmed remotely in the same manner as manually. That is, sequential data characters are transmitted in the proper order and content the same as if the signal generator front-panel keys were being pushed manually. Certain manual keystrokes are not emulated remotely when the manual function was to provide "operator convenience" features (that is, +10 and -10 degree bearing step keys). Additionally, the rf attenuation level is programmed directly from the remote controller instead of emulating the FAST INCR, SLOW INCR, FAST DECR, and SLOW DECR keystrokes. It must also be noted that, since several of the keys provide a toggle function, the programmer must keep track of the previous state of these keys or an incorrect result could be obtained.

b. Address Selection

Address selection for the signal generator is provided internally on IEEE 488 interface assembly A10. The signal generator is shipped from the factory preset to:

X	X	1	0	1	1	0
b7	b6	b5	b4	b3	b2	b1

Per appendix E of IEEE STD-488/1978, this corresponds to a LISTEN address of "6" and a corresponding TALK address of "V."

c. Address Selection Switch

A 5-position DIP switch on assembly A10 can be reset to select another address. Viewed from the component side of the A10 assembly, the switches are arranged from left (MSB) to right (LSB) to correspond with the lower order bits of the ASCII data bus. A closed switch indicates logic 0 on the ASCII data bus and an open switch indicates logic 1.

3.15.2.1 Listener Interface Function

a. General

The signal generator can receive device dependent data over the interface when addressed to listen.

b. Syntax (Refer to figure 16)

The following ASCII characters and their associated functions are recognized by the signal generator when in the LISTEN mode.

CHARACTER RECEIVED	KEYSTROKE EMULATED	CHARACTER RECEIVED	KEYSTROKE EMULATED
/	T/F, U/L, D/R	@	STD
0	0	A	N/A
1	1	B	N/A
2	2	C	CLEAR
3	3	D	RDL/DDM
4	4	E	ENTER
5	5	F	RF FREQ
6	6	G	30 Hz VAR
7	7	H	9960 FM
8	8	I	9960 Hz
9	9	J	1020/AUX
.	SELFTEST	K	90 Hz
;	VAR FREQ	L	150 Hz
<	RCL	M	%MOD
=	DELTA F	N	400 Hz
>	STO	O	RF ON/OFF
?	I	P	1300 Hz
		Q	3000 Hz

*Rf attenuation is programmed directly. See text for definition and usage of these two symbols.

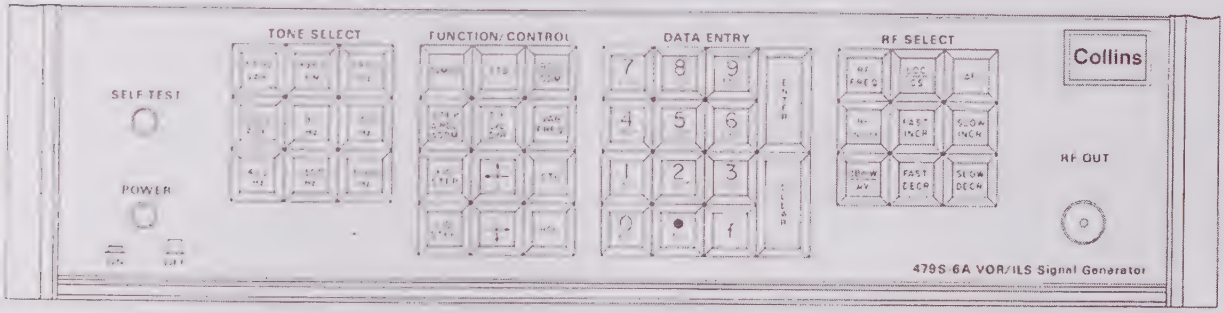

Front-Panel Switches
Figure 16

e. Operation

1. When transmitting device dependent data to the signal generator, a carriage return character followed by a line feed character must be transmitted following the last byte in the message string.
2. When power is first applied to the signal generator, the generator IEEE bus interface circuits are initialized but the unit remains under manual (front-panel) control. The first time the signal generator is addressed by the remote controller, however, the unit reverts to automatic mode and the front-panel keyboard is locked out (including the self-test switch). The front-panel displays, key lamps, and status indicators continue to operate. The unit will remain in the remote mode (even if unaddressed) until power is removed. The only exception occurs when the unit is remotely commanded into a self-test. After completion of the self-test, the unit will revert to the power-up mode and manual operation. The keyboard lockout function does not rely on nor employ any of the messages associated with the remote local (RL) interface function. The REN bus management interface line is not utilized.
3. A complete front-panel setup can be transmitted before the carriage return-line feed characters (that is, rf frequency, followed by rf level, followed by a bearing or DDM selection, etc). Individual parameters can also be transmitted; however, following each carriage return-line feed, the signal generator will not

release the IEEE bus until it has completed processing the last message string received (that is, the NDAC interface line is held low).

4. Rf level data is programmed directly into the signal generator. Two basic modes are available:
   (a) The signal generator can be programmed in the dB mW mode. In this mode, the RF LEVEL display indicates in -dB mW and displays the actual rf level as measured at the rf output connector of the generator. Rf level is programmed by transmitting an A, followed by a 1-, 2-, or 3-digit number representing the desired rf level expressed in dB. (Examples: A6, A50, A120.) Allowed range is 6 to 120, corresponding to rf levels of -6 to -120 dB mW respectively.
   (b) In the "hard μV" mode, level is displayed in hard μV, and the level at the generator rf output if 6 dB lower than that displayed. (This eliminates the need for an external 6-dB pad.) Rf level is programmed by transmitting an A, followed by a 1-, 2-, 3-digit number representing the dB equivalent for the hard μV level desired, followed by a "B." The signal generator will automatically insert an additional 6 dB, simulating an external 6-dB pad. For example, a level of 5 μV ("hard μV") is required. The equivalent level, in dB, corresponding to 5 μV is -93 dB mW; thus the generator is programmed to A93B. The rf level display indicates 5 μV and the signal generator output level is 2.5 μV.
5. The device clear (DC) and device trigger (DT) interface functions are not used.
6. The interface clear (IFC) and end or identify (EOI) bus management interface lines are not used.

3.15.2.2 Talker Interface Function

a. General

The signal generator may function as a TALK device under two very specific conditions: (1) to transmit the results of a self-test sequence; and (2) to respond to a serial poll when the service request (SRQ) bus management interface line is set TRUE (logic 0).

b. Self-Test Status

1. The remote controller can initiate a self-test of the signal generator. The generator is first addressed as a LISTEN device; the test command character ":" is then sent. The generator then will enter the self-test mode, which requires approximately 15 seconds. During this interval, the signal generator ROM and RAM memory is tested, the rf frequency is tested, the digital waveform generator is tested by programming a VOR 0 degree bearing into it and requiring a valid response (phase indication), and, lastly, the PH LOCK and LEVEL CAL statuses are determined. At the termination of the self-test, the internal CPU reprograms the signal generator to the power-up condition (refer to description section, paragraph 8.3) and restores signal generator operation to the manual mode. At this point, the remote controller can resume executing its normal program or request the self-test results from the signal generator.
2. To request self-test results, the remote controller addresses itself to listen, then sends the talk address of the signal generator. For a valid self-test, the signal generator will reply with the following ASCII character string:

P L F B

First byte ↑

3. The intelligence conveyed by the ASCII character string is as follows:

CHARACTER TRANSMITTED	FUNCTION
P	Successful self-test of the signal generator rf synthesizer phase-lock status
L	Successful self-test of the signal generator rf level status
F	Successful self-test of the signal generator rf frequency
B	Successful self-test of the signal generator audio VOR bearing phase
E	Transmitted in place of any or all of the above characters upon a self-test failure

4. The signal generator holds control of the bus during the entire self-test interval by holding the NDAC line low. (This is also true during

normal ATE operation whenever the signal generator is processing a complete character string.) If either the ROM or RAM check fails during the self-test interval, the signal generator will enter a "flash display" loop routine and will never allow the NDAC line to go high, thus the self-test pass-fail status is automatically annunciated.

5. Results of the self-test should not be requested by the controller until completion of the entire self-test interval, or an erroneous or failed condition may occur.

c. Service Request and Serial Polling

1. A request for service (SRQ) will be generated asynchronously whenever the signal generator detects invalid data (that is, an "out-of-range" rf frequency) or an invalid command character.
2. The signal generator sets the SRQ bus management interface line TRUE (logic 0) and, when addressed during a serial poll, transmits a status byte to the controller. The format is as follows:

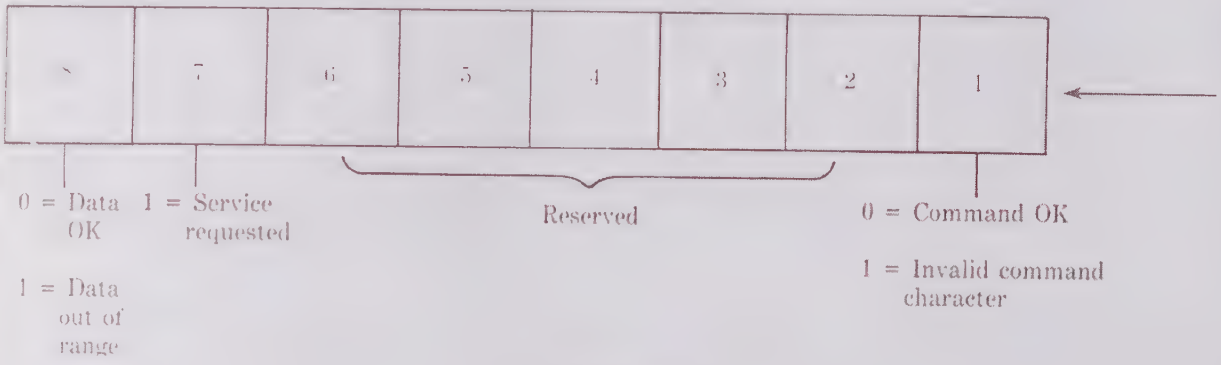

STATUS BYTE

(a) Data bit 1 will be 1 if an invalid command character was received by the signal generator. The remote controller must then repeat the entire character string.

(b) Data bits 2 through 6 are reserved for future applications and may be in either the 1 or 0 states independently.

(c) Bit 7 will be a 1 indicating service was requested.

(d) Bit 8 will be 1 if out-of-range data is received by the signal generator (that is, an invalid rf frequency character was inadvertently transmitted). The remote controller must then repeat the entire character string.

3. During a serial poll sequence, the signal generator does not recognize either the serial poll enable (SPE) or serial poll disable (SPD) universal commands, but instead monitors the state of the SRQ line. Consequently, the controller should not request the status byte from the signal generator while the SRQ line is FALSE (logic 1) or an incorrect or failed condition may occur on the bus.
4. If any other device on the bus requests service from the controller (by setting SRQ = TRUE, or logic 0), the signal generator will, when addressed during a serial poll, respond with the status byte. Bit 7 will be 0, indicating service was not requested by the generator. Bits 1 and 8 will likewise be 0.
5. The parallel poll (PP) interface function is not used.

3.15.3 IEEE Operation for Units with A10 CPN 601-2309-001 Installed

The signal generator may be remotely controlled via the IEEE standard digital interface for programmable instrumentation (IEEE STD-488/1978).

a. General

In general, the signal generator may be programmed remotely in the same manner as manually. That is, sequential data characters are transmitted in the proper order and content the same as if the signal generator front-panel keys were being pushed manually. Certain manual keystrokes are not emulated remotely when the manual function was to provide "operator convenience" features (that is, +10 and -10 degree bearing step keys). Additionally, the rf attenuation level is programmed directly from the remote controller instead of emulating the FAST INCR, SLOW INCR, FAST DECR, and SLOW DECR keystrokes. It must also

be noted that, since several of the keys provide a toggle function, the programmer must keep track of the previous state of these keys or an incorrect result could be obtained.

b. Address Selection

Address selection for the signal generator is provided internally on IEEE 488 interface assembly A10. The signal generator is shipped from the factory preset to:

0	1	1	0	1	X	X
b1	b2	b3	b4	b5	b6	b7

Per appendix E of IEEE STD-488/1978, this corresponds to a LISTEN address of "6" and a corresponding TALK address of "V".

c. Address Selection Switch

A 5-position DIP switch on assembly A10 can be reset to select another address. Viewed from the component side of the A10 assembly, the switches are arranged from right (MSB) to left (LSB) to correspond with the lower order bits of the ASCII data bus. A closed switch indicates logic 1 on the ASCII data bus and an open switch indicates logic 0.

d. GPIB Functions Implemented

The following functions are implemented per IEEE STD-488/1978:

AH1 — Complete acceptor handshake capability

SH1 — Complete source handshake capability

T6 — Basic talker, serial poll, unaddress if MLA, no talk only mode

L4 — Basic listener, unaddress if MTA, no listen only mode

SR1 — Complete service request capability

RL2 — Remote-local capability, no local lockout

DC1 — Complete device clear capability

Not implemented:

TE0 — Extended talker

LE0 — Extended listener

PP0 — Parallel poll

DT0 — Device trigger

C0 — Controller

3.15.3.1 Listener Interface Function

a. General

The signal generator can receive device dependent data over the interface when addressed to listen.

b. Syntax (Refer to figure 17)

The following ASCII characters and their associated functions are recognized by the signal generator when in the LISTEN mode.

CHARACTER RECEIVED	KEYSTROKE EMULATED	CHARACTER RECEIVED	KEYSTROKE EMULATED
.	.	@	STD
/	T/F, U/L, D/R	A	*N/A
0	0	B	*N/A
1	1	C	CLEAR
2	2	D	RDL/DDM
3	3	E	ENTER
4	4	F	RF FREQ
5	5	G	30 Hz VAR
6	6	H	9960 FM
7	7	I	9960 Hz
8	8	J	1020/AUX
9	9	K	90 Hz
:	SELFTEST	L	150 Hz
;	VAR FREQ	M	%MOD
<	RCL	N	400 Hz
=	DELTA F	O	RF ON/OFF
>	STO	P	1300 Hz
?	f	Q	3000 Hz

*Rf attenuation is programmed directly. See text for definition and usage of these two symbols.

Front-Panel Switches
Figure 17

c. Operation

1. When transmitting device dependent data to the signal generator, a carriage return character followed by a line feed character must be transmitted following the last byte in the message string.
2. A complete front-panel setup can be transmitted before the carriage return-line feed characters (that is, rf frequency, followed by rf level, followed by a bearing or DDM selection, etc). Individual parameters can also be transmitted: however, following each carriage return-line feed, the signal generator will not release the IEEE bus until it has completed processing the last message string received (that is, the NDAC interface line is held low).
3. Rf level data is programmed directly into the signal generator. Two basic modes are available:
   (a) The signal generator can be programmed in the dB mW mode. In this mode, the RF LEVEL display indicates in -dB mW and displays the actual rf level as measured at the rf output connector of the generator. Rf level is programmed by transmitting an A, followed by a 1-, 2-, or 3-digit number representing the desired rf level expressed in dB. (Examples: A6, A50, A120.) Allowed range is 6 to 120, corresponding to rf levels of -6 to -120 dB mW respectively.
   (b) In the "hard μV" mode, level is displayed in hard μV, and the level at the generator rf output if 6 dB lower than that displayed. (This eliminates the need for an external 6-dB pad.) Rf level is programmed by transmitting an A, followed by a 1-, 2-, 3-digit number representing the dB equivalent for the hard μV level desired, followed by a "B". The signal generator will automatically insert an additional 6 dB, simulating an external 6-dB pad. For example, a level of 5 μV ("hard μV") is required. The equivalent level, in dB, corresponding to 5 μV is -93 dB mW; thus the generator is programmed to A93B. The rf level display indicates 5 μV and the signal generator output level is 2.5 μV.

3.15.3.2 Talker Interface Function

a. General

The signal generator may function as a TALK device under two very specific conditions: (1) to transmit the results of a self-test sequence; and (2) to respond to a serial poll when the service request (SRQ) bus management interface line is set TRUE (logic 0).

b. Self-Test Status

1. Upon initial power up, the GPIB interface is inactive until self-test is complete. Anytime thereafter when a self-test is initiated, GBIP interface remains active but the bus is held off. Any attempt to initiate a listen function during self-test is ignored following the first bit sent down the bus. Once self-test is completed the signal generator reverts to the power-up state which reinitializes the GPIB interface allowing talker interface functions.
2. The remote controller can initiate a self-test of the signal generator. The generator is first addressed as a LISTEN device; the test command character ":" is then sent. The generator then will enter the self-test mode, which requires approximately 15 seconds. During this interval, the signal generator ROM and RAM memory is tested, the rf frequency is tested, the digital

waveform generator is tested by programming a VOR 0 degree bearing into it and requiring a valid response (phase indication), the PH LOCK and LEVEL CAL statuses are determined, and lastly the bus interface is disabled. At the termination of the self-test, the internal CPU reprograms the signal generator to the power-up condition (see description section, paragraph 8.3) and restores signal generator operation to the manual mode. At this point, the remote controller can resume executing its normal program or request the self-test results from the signal generator.

3. To request self-test results, the remote controller addresses itself to listen, then sends the talk address of the signal generator. For a valid self-test, the signal generator will reply with the following ASCII character string:

P L F B

First byte ↑

The intelligence conveyed by the ASCII character string is as follows:

CHARACTER TRANSMITTED	FUNCTION
P	Successful self-test of the signal generator rf synthesizer phase-lock status
L	Successful self-test of the signal generator rf level status
F	Successful self-test of the signal generator rf frequency
B	Successful self-test of the signal generator audio VOR bearing phase
E	Transmitted in place of any or all of the above characters upon a self-test failure

3.15.3.3 Service Request Interface Function

a. Service Request and Serial Polling

1. A request for service (SRQ) will be generated asynchronously whenever the signal generator detects invalid data (that is, an "out-of-range" rf frequency) or an invalid command character.
2. The signal generator sets the SRQ bus management interface line TRUE (logic 0) and, when addressed during a serial poll, transmits a status byte to the controller. The format is as follows:

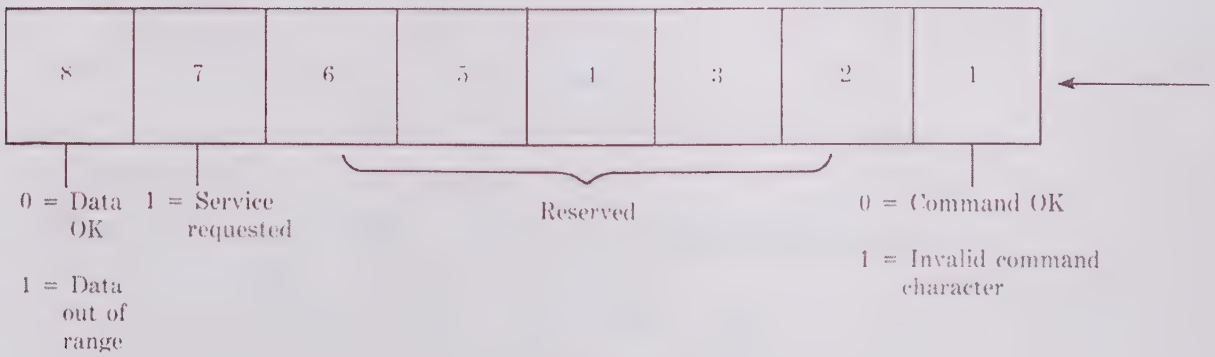

STATUS BYTE

(a) Data bit 1 will be 1 if an invalid command character was received by the signal generator. The remote controller must then repeat the entire character string.
(b) Data bits 2 through 6 are reserved for future applications and may be in either the 1 or 0 states independently.
(c) Bit 7 will be a 1 if service was requested.
(d) Bit 8 will be 1 if out-of-range data is received by the signal generator (that is, an invalid rf frequency character was inadvertently transmitted). The remote controller must then repeat the entire character string.

3.15.3.4 Device Clear Interface Function

The device clear interface function provides the signal generator with the capability to be cleared (initialized).

Sending the universal bus command "DCL" (device clear — hex code 14) or the addressed bus command "SDC" (selective device clear — hex code Ø4) will return the signal generator to the power-up state, with the exception of remaining in the remote mode.

3.15.3.5 Remote-Local Interface Function

Upon power-up, the 479S-6A will be in the local mode (front panel is activated). The first time the signal generator is addressed to listen with the remote enable (REN) bus control line true, the signal generator will enter the remote mode. In this mode the bus has control and the front-panel keyboard is locked out (except for the power switch). If the signal generator is addressed to listen with the REN line false, the signal generator will remain in the local mode and the generator will handshake in but ignore all data on the bus. Addressing the signal generator to talk has no effect on the remote-local status. When the generator is in the remote mode, it may be returned to the local mode in one of three ways:

a. Initiate a power-up state. This may be done by sending either the self-test command ":" or one of the bus commands "DEC" or "SDC".
b. Address the signal generator to listen and send the addressed bus command "GTL" (go to local-hex code Ø). This will not change any conditions set up on the signal generator, but will return the front panel to the active state.
c. Set the REN line to a false state. The signal generator will respond to this in the same way as a "GTL" command.

The signal generator has no "local lockout" capability.

3.15.3.6 Other Interface Functions

Bus commands associated with functions not used, as well as undefined bus commands, will be ignored by the signal generator.

3.15.4 IEEE Programming Examples

a. Example Number 1

The following example demonstrates how the signal generator can be programmed to perform rf sensitivity measurements (s+n/n) at several different frequencies.

DESIRED CONDITION	DATA	COMMENTS
NA	NA	All programs begin with generator in the power-up condition (see description section, paragraph 8.3).
1. 329.15 MHz	F329.15E	
2. 5 μV	A93B	Hard μV; display reads 5 μV.
4. 150 Hz only	K	90 Hz is removed. This is only necessary the first time the glideslope mode is activated. Subsequent rf frequency selections in the glideslope band will not require this command.
5. 30% modulation	ML30E	
6. NA	NA	Take signal-plus-noise reference reading.
7. No modulation	ML	150-Hz tone is removed.
8. NA	NA	Measure noise and compute result.
9. 330.35 MHz modulated 30% with 150 Hz	F330.35EL	Rf level and modulation remains unchanged from previous glideslope frequency; L restores 150 Hz at 30% modulation.
10. No modulation	L	
11. NA	NA	Measure noise level and compute result.
12. 332 MHz modulated 30% by 150 Hz (rf level to be 100 μV)	F332ELA67B	Display reads 100 μV. Generator output is 50 μV.
13. NA	NA	Record signal-plus-noise reading.
14. No modulation	L	
15. NA	NA	Record noise level and compute result.

b. Example Number 2

The following example demonstrates how the signal generator may be programmed to perform rf selectivity measurements.

DESIRED CONDITION	DATA	COMMENTS
1. 110.10 MHz, unmodulated, rf level 4 μV (hard μV)	F110.1EKLA95B	
2. NA	NA	Record AGC level as a reference.
3. 110.008 MHz, 8 μV	=110.088EA89B	
4. NA	NA	Reading is taken at f_c - 12 kHz (6-dB point).
5. 110.112 MHz	110.112E	
6. NA	NA	Reading is taken at f_c + 12 kHz (6-dB point).
7. 110.137 MHz, rf level 4 mV (hard μV)	110.137EA35B	
8. NA	NA	Reading is taken at f_c + 37 kHz (60-dB point).
9. 110.063 MHz	110.063E	
10. NA	NA	Reading is taken at f_c - 37 kHz (60-dB point).

c. Example Number 3

The following example programs the signal generator for ILS on-center and off-course DDM's. Both 90 > 150 and 150 > 90 Hz situations are illustrated.

DESIRED CONDITION	DATA	COMMENTS
1. 332 MHz, 700 μV (hard μV), standard centering signal	F332EA50B	Upon initial selection of the glideslope mode, a standard on-center condition is established.
2. DDM.091, 90 > 150 Hz	D.091E/	Initial DDM selection upon entering glideslope mode will automatically be 150 > 90 Hz. T/F U/L D/R command toggles off-course DDM's to select predominating tone.
3. DDM.091, 150 > 90 Hz	/	
4. DDM.4, 150 > 90 Hz	D.4E	
5. DDM.4, 90 > 150 Hz	/	

Collins 479S-6A VOR/ILS Signal Generator

Rockwell International

installation

Collins Government Avionics Division

Printed in USA

523-0768884-101118
1 September 1978
1st Revision, 15 October 1980

table of contents

Paragraph	*Page*
1. General	1
2. Unpacking and Inspection	1
3. Packing	1
4. Installation	1
4.1 Rack Mounting Kit	1
4.2 Rack Mounting	1
5. Cooling Requirements	2
6. Operational Test	2

List of Effective Pages

*The asterisk indicates pages changed, added, or deleted by the current change.

Page No	Issue
*Title	15 Oct 80
*List of Effective Pages	15 Oct 80
*1 thru 4	15 Oct 80

Record of Revisions

RETAIN THIS RECORD IN THE FRONT OF MANUAL.
ON RECEIPT OF REVISIONS, INSERT REVISED PAGES IN THE MANUAL, AND ENTER DATE INSERTED AND INITIALS.

REV NO	REVISION DATE	INSERTION DATE/BY	SB NUMBER INCLUDED	REV NO	REVISION DATE	INSERTION DATE/BY	SB NUMBER INCLUDED
1st Ed	1 Sep 78		None				
1	15 Oct 80		1 thru 10				

installation

1. GENERAL

This section provides information on unpacking and inspection, preparation for shipment, rack mounting, and connector information for the 479S-6A VOR/ILS Signal Generator.

2. UNPACKING AND INSPECTION

Unpack equipment and inspect for signs of damage. Refer to figure 1 during performance of the unpacking procedure. The container and packing material should be saved for storage or reshipment.

a. Use a sharp tool, such as a knife, and carefully cut sealing tape of shipping container.
b. Fold back container flaps.
c. Remove top mold and polyethylene film sheet.
d. Remove unit from shipping container. Do not remove protective caps or covering from connectors.
e. Replace all packing material in shipping container, and save container for storage and/or reshipment purposes.

3. PACKING

Prepare the 479S-6A for storage or shipment in accordance with the following procedure:

a. Obtain original shipping container for unit and remove all packing material except bottom mold. Refer to figure 1.
b. Install protective connector caps or covers over all connectors.
c. Place unit on bottom mold of shipping container.
d. Install top foam mold over unit, ensuring foam is fitted properly over unit.
e. Close flaps of shipping container and seal.

4. INSTALLATION

The 479S-6A is shipped from the factory in a standard bench configuration. A rack mounting kit (CPN 638-2250-001) is available to allow mounting the 479S-6A in an equipment rack. Rack mounting procedures are described below.

4.1 Rack Mounting Kit

Prior to installing the 479S-6A in an equipment rack, the rack mounting kit must be installed. Mount the flanges contained in the kit as follows:

a. Remove screws that secure dust cover: two from each side and six from bottom of signal generator.
b. Slide dust cover off of signal generator.
c. Remove four screws and washers (two located on each side behind dust cover mounting bracket) securing front panel assembly to chassis.
d. Pull front panel assembly forward to clear rf connector and tilt forward, taking care not to pull loose the connecting wiring.
e. Remove one flathead screw securing left-side dust cover mounting bracket and handle to front panel assembly.
f. Remove left handle and position rack mounting flange in its place with lip facing out.
g. Reposition left-side dust cover mounting bracket and secure with one flathead screw.
h. Remove one flathead screw securing right-side dust cover mounting bracket and handle to front panel assembly.
i. Remove right handle and position rack mounting flange in its place with lip facing out.
j. Reposition right-side dust cover mounting bracket and secure with one flathead screw.
k. Reposition front panel assembly on chassis and secure with four screws and washers.
l. Slide dust cover on signal generator and secure with ten screws.

4.2 Rack Mounting

Mount the 479S-6A in an equipment rack as follows.

a. Install the rack mounting kit (refer to paragraph 4.1).
b. Locally fabricate support for the rear of the 479S-6A and install it in the equipment rack. Recommended method of adequate support is aluminum angle side rails mounted in the equipment rack.

Caution

The center of gravity of the 479S-6A is located toward the extreme rear of the unit. Failure to provide adequate support may result in weakening and subsequent failure of the front mounting flanges.

c. Position the 479S-6A in the equipment rack and secure with four mounting screws (locally procured).

d. Connect cabling to rear electrical connections as required.

5. COOLING REQUIREMENTS

The 479S-6A is cooled by an internal blower mounted on the rear of the chassis. Ensure that the filter is not obstructed.

6. OPERATIONAL TEST

Refer to the operation section for power-up and self-test procedures.

NOTE: UNLESS OTHERWISE SPECIFIED, DIMENSIONS ARE IN MILLIMETRES [INCHES].

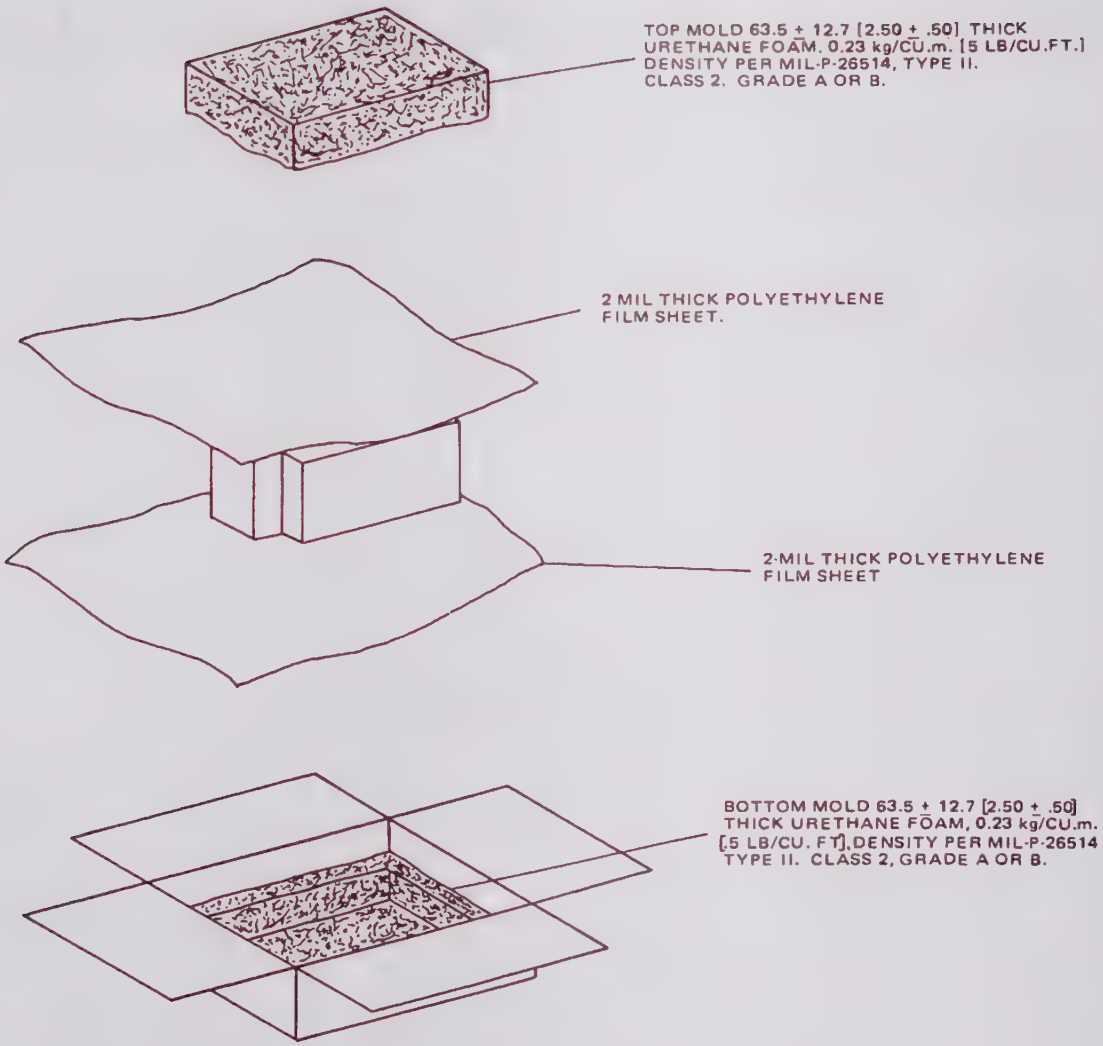

TP5-5294-011

Typical Unit Packing
Figure 1

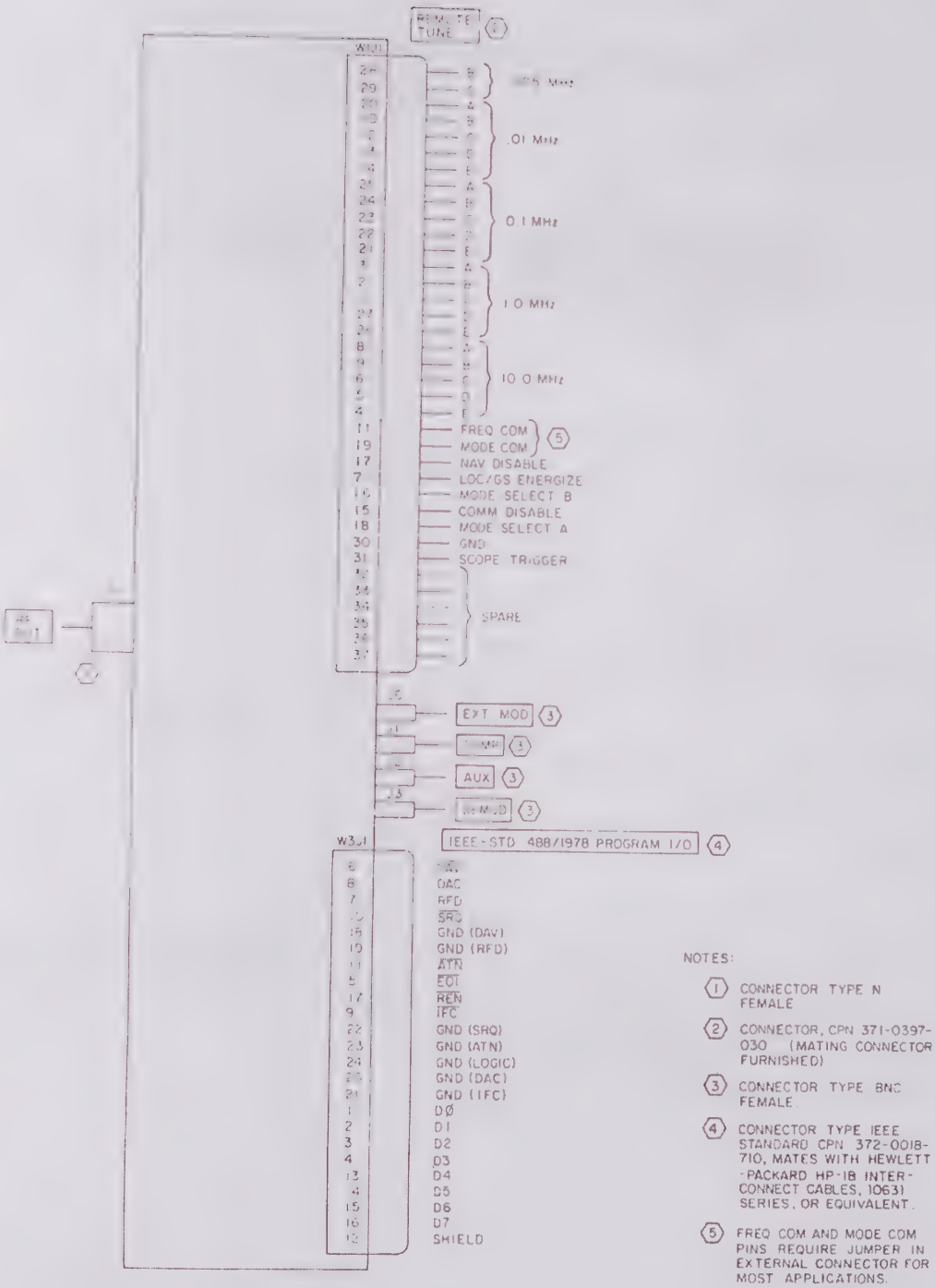

478S-6A External Wiring and Connectors
Figure 2

Collins 479S-6A VOR/ILS Signal Generator

Rockwell International

maintenance

Collins Government Avionics Division

Printed in USA

523-0768885-102118
3rd Edition, 15 October 1980

table of contents

Paragraph		Page
1.	*General*	1
2.	*Test Equipment and Power Requirements*	1
2.1	Test Equipment	1
2.2	Input Power Rewiring for 230-V AC Operation	1
3.	*Blower Filter Preventive Maintenance*	1
3.1	Inspection	1
3.2	Cleaning	9
4.	*Test Procedures*	9
4.1	General	9
4.2	Minimum Performance Test	9
4.2.1	Turn-on Operation	9
4.2.2	Self-Test Operation	10
4.2.3	Marker Beacon	10
4.2.4	VOR	10
4.2.5	Localizer	11
4.2.6	Glideslope	11
4.2.7	VHF Communications	11
4.2.8	Localizer DDM	12
4.2.9	Glideslope DDM	12
4.2.10	Frequency Vernier	12
4.2.11	RF Output Level	12
4.3	Total Performance Test	13
4.3.1	Introduction	13
4.3.2	Initial Turn-On	13
4.3.3	Self-Test	13
4.3.4	RF Frequency Accuracy	13
4.3.5	RF Output Frequency Response	13
4.3.6	RF Output Attenuator Accuracy	13
4.3.7	RF Harmonics	15
4.3.8	Broadband Noise (SSB) and Close-In Spurious Signals	16
4.3.9	RF Frequency Vernier	19
4.3.10	Audio Tone Frequency Accuracy	19
4.3.11	Audio Tone Distortion	19
4.3.12	AM Percent Modulation	20
4.3.13	DDM Accuracy	25
4.3.14	ILS Phase (90 150-Hz Composite Signal)	26
4.3.15	Radial Accuracy	27
4.3.16	9960-FM Deviation	29
4.3.17	Scope Trigger	31
4.3.18	Remote Tune	31
4.3.19	Store/Recall	31
4.3.20	IEEE/488-1978	31
5.	*Troubleshooting*	33
5.1	General	33
5.2	Preliminary Procedure	36
5.3	Module Level Troubleshooting	56
5.4	Functional Level Troubleshooting	57
5.4.1	Front Panel Assembly A1 Troubleshooting	57
5.4.2	Controller/Audio Assembly A2 Troubleshooting	63
5.4.3	RF Modulator Assembly A3 Troubleshooting	71
5.4.4	Synthesizer Assembly A4 Troubleshooting	95
5.4.5	Power Supply Assembly A5 Troubleshooting	98
5.4.6	Remote Tune Assembly A8 Troubleshooting	105
5.4.7	Store/Recall Assembly A9 Troubleshooting	105
5.4.8	IEEE 488/1978 Bus Interface Board A10 Troubleshooting	105
6.	*Disassembly/Assembly*	120
6.1	Disassembly	120
6.1.1	General	120
6.1.2	Precautions and General Techniques	120
6.1.3	Removal of Cover	120
6.1.4	Removal and Disassembly of Front Panel Assembly A1	120
6.1.5	Removal and Disassembly of Controller/Audio Assembly A2	122
6.1.6	Removal and Disassembly of RF Modulator Assembly A3	123
6.1.7	Removal and Disassembly of Synthesizer Assembly A4	124
6.1.8	Removal and Disassembly of Power Supply Assembly A5	127
6.1.9	Removal of Digitally Controlled Attenuator A6AT1	127
6.1.10	Removal of Remote Tune Assembly A8	128
6.1.11	Removal of Store/Recall Assembly A9	128
6.1.12	Removal of IEEE-488/1978 Program I/O A10	128
6.2	Assembly	132
6.2.1	General	132
6.2.2	Precautions and General Techniques	132
6.2.3	Reassembly and Replacement of Digitally Controlled Attenuator A6AT1	133
6.2.4	Reassembly and Replacement of Power Supply Assembly A5	133
6.2.5	Reassembly and Replacement of RF Modulator Assembly A3 and Synthesizer Assembly A4	133
6.2.6	Reassembly and Replacement of Controller/Audio Assembly A2	134
6.2.7	Reassembly and Replacement of Front Panel Assembly A1	134
6.2.8	Replacement of Remote Tune Assembly A8	134
6.2.9	Replacement of Store/Recall Assembly A9	134
6.2.10	Replacement of IEEE-488/1978 Program I/O A10	134
6.2.11	Replacement of Cover	134
6.2.12	Replacement of Lens Switches and Bulbs	135
7.	*Repair*	135
8.	*Alignment*	135
8.1	Introduction	135
8.2	Power Supply Alignment	135
8.3	Analog Card A2A2 +12-V DC Regulator	136
8.4	Synthesizer Assembly A4 +20-V DC Regulator	136
8.5	Audio Tone Level	136
8.5.1	VOR Signal	136
8.5.2	ILS Signal	138
8.5.3	Marker Beacon Signal	138
8.6	Audio Tone Frequency	138
8.6.1	VOR Signal	138
8.6.2	ILS Signal	139
8.6.3	Marker Beacon Signal	139
8.7	VOR Radial	139
8.8	RF Output Frequency	140
8.9	RF Output Level	140
8.9.1	Marker Beacon Signal	140
8.9.2	VOR/LOC Signals	140
8.9.3	Glideslope Signal	140
8.10	AM Modulation	140
8.10.1	AM Modulation (Using Modulation Meter)	140
8.10.2	AM Modulation (Using Spectrum Analyzer)	141
8.10.3	Glideslope Signal	142
8.10.4	Marker Beacon Signal	142
8.11	Synthesizer VCO A4A3 Alignment	143
8.12	Synthesizer Regulator-Divider Board A4A1A1 Alignment	144
8.13	RF Amplifier A4A2 Alignment	144

NOTICE: This section replaces second edition dated 1 October 1978.

List of Effective Pages

*The asterisk indicates pages changed, added, or deleted by the current change

Page No	Issue
*Title	15 Oct 80
*List of Effective Pages	15 Oct 80
*1	15 Oct 80
2 thru 5	1 Oct 78
*6	15 Oct 80
7 thru 11	1 Oct 78
*12	15 Oct 80
13 thru 20	1 Oct 78
*21	15 Oct 80
22 thru 30	1 Oct 78
*31 thru 33	15 Oct 80
34 thru 35	1 Oct 78
*36	15 Oct 80
37 thru 61	1 Oct 78
62 Blank	1 Oct 78
63	1 Oct 78
*64	15 Oct 80
65 thru 66	1 Oct 78
*67	15 Oct 80
68	1 Oct 78
*69	15 Oct 80
70 Blank	1 Oct 78
*71	15 Oct 80
72 thru 78	1 Oct 78
*79	15 Oct 80
*80 Blank	15 Oct 80
*81 thru 87	15 Oct 80
*88 Blank	15 Oct 80
*89 thru 99	15 Oct 80
*100 Blank	15 Oct 80
*101	15 Oct 80
*102 Blank	15 Oct 80
*103	15 Oct 80
*104 Blank	15 Oct 80
*105 thru 125	15 Oct 80
*126 Blank	15 Oct 80
*127 thru 129	15 Oct 80
*130 Blank	15 Oct 80
*131 thru 145 Added	15 Oct 80
*146 Blank Added	15 Oct 80

Record of Revisions

RETAIN THIS RECORD IN THE FRONT OF MANUAL.
ON RECEIPT OF REVISIONS, INSERT REVISED PAGES IN THE MANUAL, AND ENTER DATE INSERTED AND INITIALS.

REV NO	REVISION DATE	INSERTION DATE/BY	SB NUMBER INCLUDED	REV NO	REVISION DATE	INSERTION DATE/BY	SB NUMBER INCLUDED
1st Ed	1 Sep 78		None				
2nd Ed	1 Oct 78		None				
3rd Ed	15 Oct 80		1 thru 10				

1. GENERAL

This section contains testing, troubleshooting, disassembly/assembly, and alignment procedures for the 479S-6A VOR/ILS Signal Generator. The technician performing the maintenance procedures is assumed to be familiar with the 479S-6A; the specified test equipment; and general metrology techniques, terminology, and definitions.

The following nonstandard abbreviations are used throughout this section.

ABBREVIATION	DEFINITION
COMP	Composite
dBc	Decibel below carrier
D/R	Down/right
DDM	Difference in depth of modulation
DEG	Degree
DEMOD	Demodulation
GS	Glideslope
MOD	Modulation
MB	Marker beacon
T/F	To/from
TI	Test instrument
U/L	Up/left

The 479S-6A VOR/ILS Signal Generator is referred to as TI throughout this section.

2. TEST EQUIPMENT AND POWER REQUIREMENTS

2.1 Test Equipment

No test equipment is required to perform the minimum performance tests in paragraph 4.2.

Table 1 is a list of test equipment required to perform the total performance tests in paragraph 4.3. The table provides an equipment type number, equipment nomenclature, minimum use specifications, and a representative type. The item number is used in the test procedures to identify the equipment used. The minimum use specifications are the principal parameters on which test procedure integrity is based. The representative type of equipment listed meets the minimum use specifications. Alternate equipment may be used if it meets or exceeds the minimum use specifications.

2.2 Input Power Rewiring for 230-V AC Operation

The signal generator is shipped from the factory wired for 115-V ac, 50/60-Hz operation. However, the signal generator can operate on 230 V ac, 50/60 Hz when the input wiring is changed. Rewire input power as described in steps a through k to change from 115- to 230-V ac operation.

a. Remove two screws from each side and six screws from bottom of signal generator that secure dust cover. Refer to figure 1.
b. Slide off dust cover from signal generator.
c. Remove six screws that secure cover on power supply assembly A5, and remove cover.
d. Remove two screws that secure barrier strip cover over barrier strip, and remove cover. Refer to figure 2.
e. Rewire barrier strip as shown in view B, figure 3.
f. Install barrier strip cover over barrier strip and secure with two screws. Refer to figure 2.
g. Install cover on power supply assembly A5 and secure with six screws. Refer to figure 1.
h. Slide dust cover on signal generator and secure with 10 screws.
i. Remove two screws that secure input power identification plate to rear of signal generator, and remove plate.
j. Turn plate over and reinstall on signal generator with two screws. Input power identification plate should state that signal generator is wired for 230-V ac operation.

3. BLOWER FILTER PREVENTIVE MAINTENANCE

3.1 Inspection

The blower filter on the rear of the signal generator should be inspected for cleanliness at 30-day intervals. Restricted airflow through the filter can jeopardize signal generator accuracy and increase failure rates. If filter is dirty, clean as described in paragraph 3.2.

Table 1. Required Test Equipment

ITEM	EQUIPMENT	MINIMUM USE SPECIFICATIONS	REPRESENTATIVE TYPE
2.1	Spectrum analyzer	Frequency: 8 to 1250 MHz If bandwidth: Selectable 300 Hz to 300 kHz Scan width: Zero scan and selectable ranges 2 kHz to 100 MHz/division Sensitivity (average noise level): < -102 dB mW with 10-kHz if bandwidth Display mode: Selectable 10 or 2 dB division and linear Video filter, selectable: Off (>500 kHz), 10 kHz, 100 Hz, and 10 Hz	Hewlett-Packard 141T/8552B/8554B *Note* Special calibration is required, if modulation meter (item 2.17) is not available, to ensure the vertical output linearity specification. The spectrum analyzer and plug-ins must be calibrated as a system to determine if the spectrum analyzer vertical output linearity meets the test requirements. Calibration verification paragraph 4.2.11.2 provides a calibration procedure to determine this parameter.
		Vertical output: Provides linear detected output. Calculated dc offsets derived from ±10-dB rf input level changes from a reference -200-mV dc vertical output level must be equal within 2 mV.	Hewlett-Packard 8554B, Opt E58 (includes 141T/8554B Opt H58/ 8552B Opt H58) is available from Hewlett-Packard as a precalibrated system.
2.2	Digital multimeter	Dc voltage range: 0 to 1 V Accuracy: ±0.02% reading +0.1 mV	Fluke 8600A
2.3	True rms differential voltmeter	True rms responding. Ac voltage range: 5 mV to 1.2 V Accuracy: ±0.2% reading, 30 to 9960 Hz Voltage ratio accuracy, 1-V range between 0.2 and 0.8 V: ±0.015% at 90 and 150 Hz	Fluke 931B *Note* Special measurements are required to ensure voltage ratio accuracy specification.
2.4	Power meter	Frequency: 74 to 335 MHz Range: -20 to 0 dB mW full scale, selectable 5-dB steps Accuracy: ±5% full scale Vswr: < 1.3:1	Hewlett-Packard 435A/8482A
2.5	Step attenuator	Frequency: 8 to 108 MHz Range: 0 to 60 dB in 10-dB steps Vswr: 1.20 max	Hewlett-Packard 355D *Note* Special calibration data required for attenuation accuracy requirements. The 8- to 11-MHz requirements are only
(Cont)			

Table 1. Required Test Equipment (Cont).

ITEM	EQUIPMENT	MINIMUM USE SPECIFICATIONS	REPRESENTATIVE TYPE
2.5 (Cont)		Attenuation accuracy: 8 to 11 MHz, change in attenuation from 0 to 60 dB known within ±0.5 dB 30 MHz, attenuation change between 10-, 20-, and 30-dB steps known within 0.02 dB 108 MHz, attenuation change of each step from 0 to 40 dB known within ±0.2 dB	required to perform supplemental calibration verification procedures described in paragraph 4.3.2. **Note** 30-MHz calibration data not required if modulation meter (item 2.17) is available.
2.6	Distortion analyzer	Frequency: 30 to 14 kHz Full-scale ranges: 0.3, 1, 3, and 10% Accuracy: ±3% full scale Voltmeter: Used as null indicator at 30 Hz, sensitivity 10 mV	Hewlett-Packard 331A
2.7	Frequency counter	Frequency: 30 Hz to 345 MHz Accuracy: ±0.3 ppm, 75 to 345 MHz; ±10 ppm, 30 Hz (33 333.33 μs)	Dana 8030B
2.8	Oscilloscope	Frequency: dc to 16 MHz Deflection factor: 0.1 V to 5 V/division Deflection accuracy: ±3% Calibrator: 300 mV ±1% Sweep modes: Main, delayed Horizontal time base: 5 μs to 50 ms/division (selectable in 1, 2, and 5 sequence) Sweep accuracy: ±1%, 5 μs to 5 ms/division; ±2%, 10 ms to 50 ms/division	Tektronix 475
2.9	VOR bearing standard	Accuracy: See note in paragraph 4.3.15	Collins 478A-3
2.10	Rf amplifier (2 required)	Frequency: 8 to 110 MHz Gain: 20 dB min Noise figure: <5 dB Vswr: <1.7	Hewlett-Packard 8447A

Table 1. Required Test Equipment (Cont).

ITEM	EQUIPMENT	MINIMUM USE SPECIFICATIONS	REPRESENTATIVE TYPE
2.11	Signal generator	Frequency: 30 to 345 MHz Output level: Variable, +7 to -60 dB mW Close-in/broadband noise: See note in paragraph 4.3.8	Hewlett-Packard 8640B
2.12	Attenuator (2 required)	Frequency: 30 MHz Loss: 10 ±0.5 dB Vswr: <1.05	Weinschel 1A-10 *Note* Special calibration is required to ensure vswr specification.
2.13	Attenuator	Frequency: 108 MHz Loss: 3 ±0.5 dB Vswr: <1.20	Weinschel 1A-3
2.14	Attenuator	Frequency: 50 to 400 MHz Loss: 6 ±0.25 dB Vswr: <1.20	Weinschel 1A-6
2.15	Phasemeter	Frequency: 30 Hz Absolute accuracy: 0.05° from 0.00 to 359.99°	Krohn-Hite 6500 *Note* Not required if Collins 478A-3 VOR bearing standard (item 2.9) is available.
2.16	Resistive divider	Input/output voltage ratio: 2/1 Voltage rating: 2 V min Input resistances: 94 kΩ ±1%	Constructed using two 47-kΩ, 1/4-W, 1% resistors.
2.17 (Cont)	Modulation meter	Frequency range: 75 to 335 MHz Input sensitivity: -6 dB mW Amplitude modulation accuracy at: <10 or >95% AM: ±3% of reading 10 to 95% AM: ±2% of reading 20 to 40% AM: ±0.7% of reading	Boonton 82AD *Note* AM modulation performance exceeds the manufacturer's quoted specification; however, measurement data indicates that the unit will meet these required accurates.

Table 1 Required Test Equipment (Cont)

ITEM	EQUIPMENT	MINIMUM USE SPECIFICATIONS	REPRESENTATIVE TYPE
2.17 (Cont)		***Note*** AM accuracy from 20 to 40% assumes the following conditions. Measurement bandwidth: 10 Hz to 15 kHz. Temperature: 25 ±10 °C. Rf input level: 100 mV to 1 V. Detected audio distortion: <0.2% for 30% AM; <0.7% for 90% AM	
2.18	Audio oscillator	Frequency: 150 Hz. Output amplitude: 0 to >3 V rms into 600 Ω. Distortion: <0.5%	Hewlett-Packard 200 CD
2.19	Computing counter	Capable of measuring within 1 Hz, 960-Hz peak-to-peak deviation of a 9960-Hz signal that is being frequency modulated with a 30-Hz tone	Hewlett-Packard 5360A/5365A/5375A
2.20	Mixer	Frequency: 75 to 345 MHz. If output: 8 to 12 MHz	Hewlett-Packard 10514A
2.21	Notch filter	Center frequency: 10.00 MHz. 40-dB notch width: 3 kHz min. 1-dB notch width: ±11 kHz max. Bandpass flatness: ±1 dB from ±11 to ±3000 kHz from center frequency	McCoy Electronics 2B554
2.22	Low-pass filter	Single pole RC. 3-dB cutoff frequency: 23.5 kHz (nom)	Constructed using 10-kΩ, 1/4 W, 10% resistor and 680-pF, 50-V dcw, 10% capacitor.
2.23	Not used		
2.24	Resistor	100 Ω, 1%, 0.25 W	
2.25	Resistor substitution box	Range: 0 to 900 kΩ. Resolution: 10. Accuracy: Within ±1% of selected value. ***Note***	
Items 2.26 thru 2.29 are contained in the 479S-6A maintenance kit, CPN 634-9122-001.			
2.26	Rf module extender cable	Allows extension of rf module on service loop for testing and troubleshooting	CPN 634-9049-001. Refer to figure 18.

Table 1. Required Test Equipment (Cont).

ITEM	EQUIPMENT	MINIMUM USE SPECIFICATIONS	REPRESENTATIVE TYPE
2.27	Modulator/ synthesizer extender cable	Allows extension of synthesizer from rf module for testing and troubleshooting	CPN 634-9224-001
2.28	Extender card	Allows extension of remote tune, store/recall, and IEEE modules for testing and troubleshooting	CPN 601-2039-001
2.29	Extraction tool	Aid to allow removal of front-panel key caps for key cap or lamp replacement	CPN 638-2280-001
2.30	External controller		HP 9825A Calculator with HP 98210A String-Advanced programming ROM and HP 98213A General I/O-Extended I/O ROM
2.31	GPIB interface cable		HP 98034A
2.32	Rf voltmeter	Frequency: 74 to 335 MHz Range: 3 mV to 3 V full scale Accuracy: ±2% of reading +3% of full scale	Boonton Electronics 92C
2.33	Divider	100:1	Boonton Electronics 91-7C
2.34	Adapter	BNC to snap on	Selectro 51-073-6800
2.35	Sweep generator	Sweep width: 50 to 400 MHz Output impedance: 50 Ω nominal Output level: 0 to +10 dB mW with vernier Output flatness: ±0.5 dB Operating modes: CW and start/stop Sweep modes: recurring	Wavetek 2001
2.36	Power supply	Output: 0 to 40 V dc at 300 mA	HP6205B
2.37	Power supply	Output: 0 to 40 V dc at 1.5 A	HP6289A
2.38	A3A1 test fixture	Fabricate as described in paragraph 5.4.3.1.	

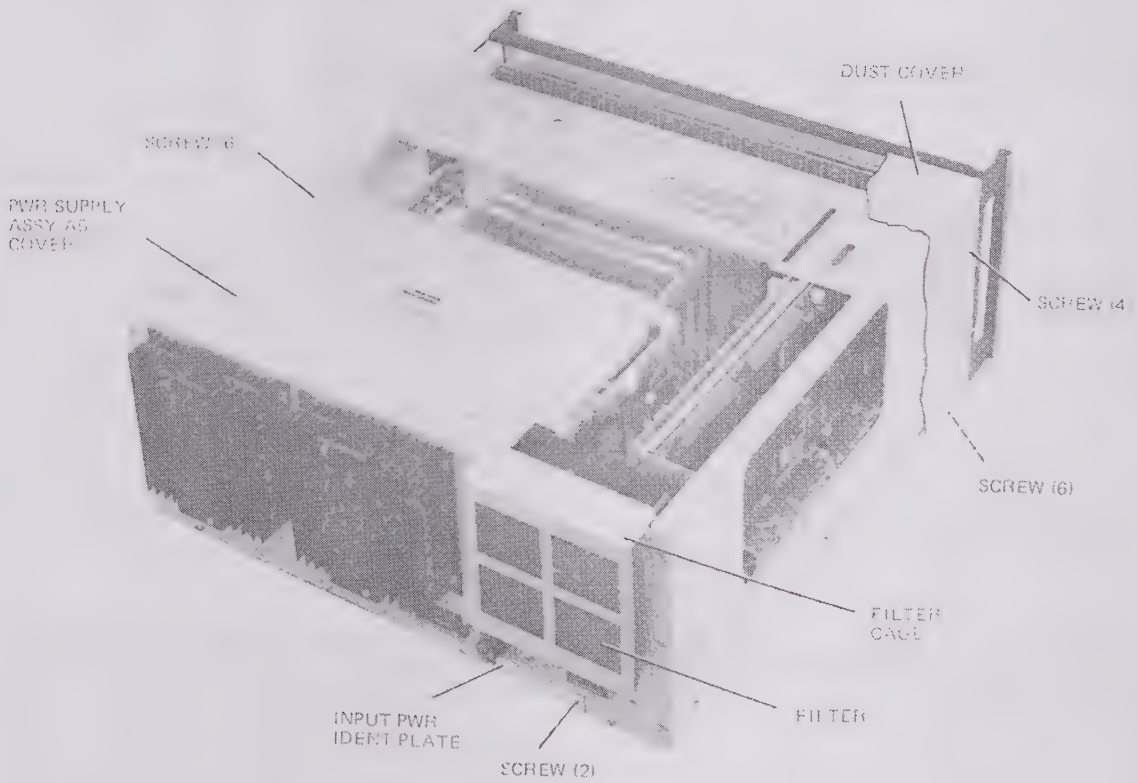

Input Power Rewiring, Disassembly and Assembly
Figure 1

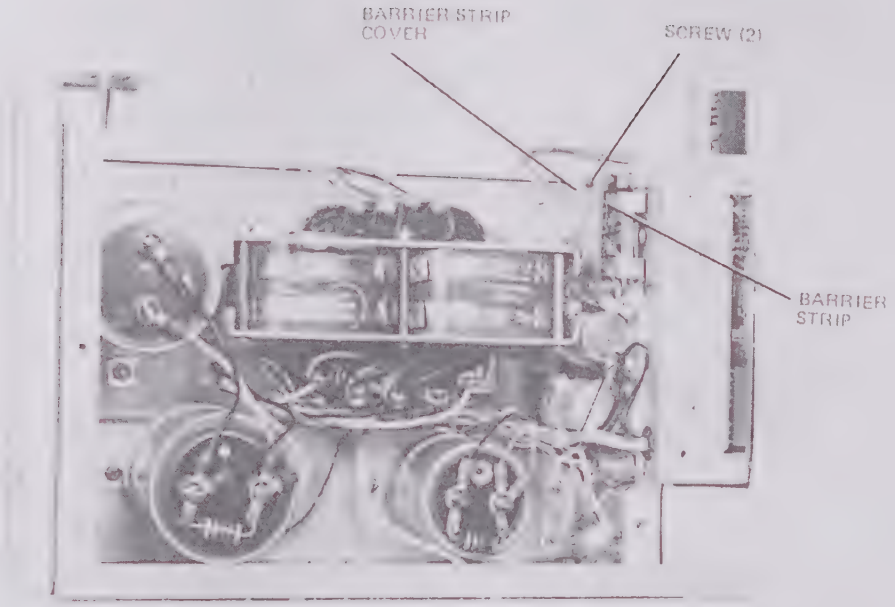

TP5-2870-017

Power Supply Assembly A5, Barrier Strip Location
Figure 2

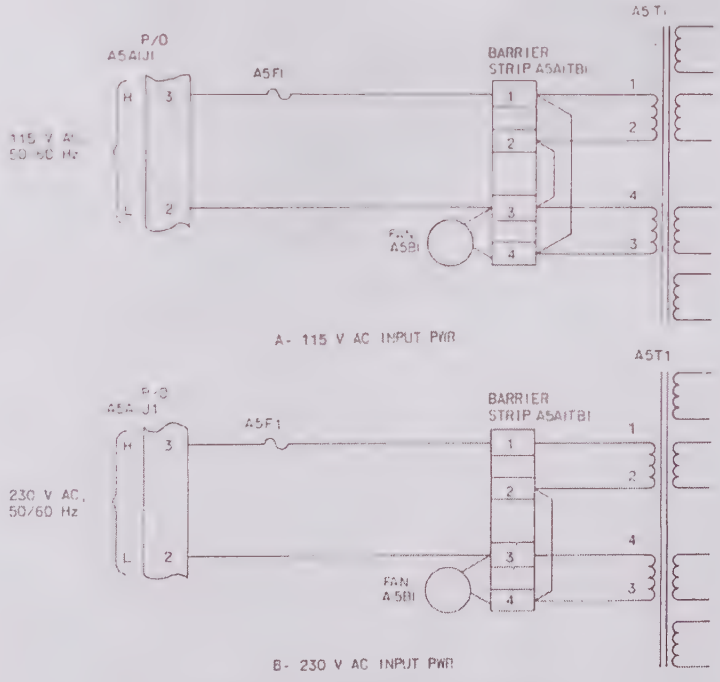

TP5-2871-013

Input Power Rewiring, Schematic Diagram
Figure 3

3.2 Cleaning

a. Slide filter out of filter cage on rear of signal generator. Refer to figure 1.
b. Thoroughly wash filter using a mild detergent in water.
c. Thoroughly rinse filter in clear water and air dry. Do not use extremely hot air to dry filter.
d. Slide filter in filter cage.

4. TEST PROCEDURES

4.1 General

The test procedures contained in this paragraph are provided to allow the technician to isolate malfunctions without performing the calibration verification procedures. However, troubleshooting may be accessed from either the test procedures contained in this paragraph or the calibration verification procedures contained in the calibration verification section of this manual. When a malfunction occurs during performance of either the test procedures or the calibration verification procedures, the alignment/adjustment procedures should be performed before starting the troubleshooting procedures. Refer to paragraph 8 for alignment/adjustment procedures. If performance of the alignment/adjustment fails to correct the malfunction, proceed to the step in the troubleshooting procedure that corresponds to the test procedure step where the failure occurred. Refer to paragraph 5 for troubleshooting procedures. A cross-reference is provided in paragraph 5.3 for converting calibration verification procedure steps to test procedure steps and allows entry into the troubleshooting procedures from the calibration verification procedures.

After the malfunction is corrected, the calibration verification procedures contained in the calibration verification section of this manual must be performed to ensure correct and accurate operation of the signal generator.

The test procedures should be performed under the following environmental conditions: temperature, +10 to +40 °C (+50 to +104 °F); relative humidity, 95 percent maximum.

The environmental conditions must be met in order to obtain the results contained in the test procedures.

Before performance of the test procedures, the technician should become familiar with the procedures that are to be performed.

4.2 Minimum Performance Test

4.2.1 Turn-on Operation

Press TI POWER switch to ON. TI display must be in the standard VOR mode condition as shown in figure 4. Verify fan A5B1 is operating.

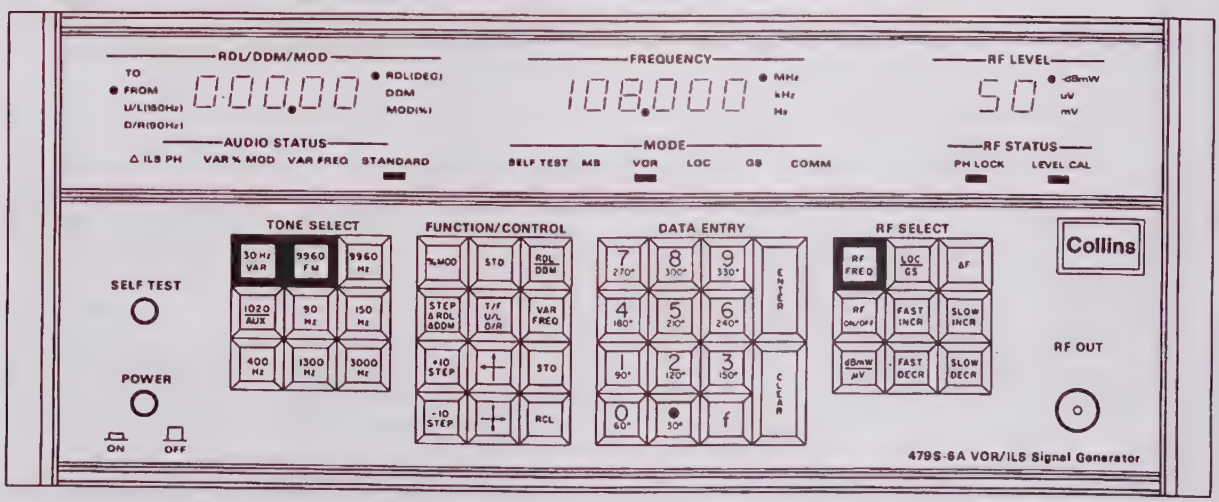

NOTE: SHADED KEYS INDICATE LIT KEYS

Standard VOR Mode Display
Figure 4

4.2.2 Self-Test Operation

a. Press and hold TI SELF TEST switch. TI display must be as shown in figure 5.
b. Release SELF TEST switch.
c. After self-test cycle is complete, TI display must return to standard VOR mode condition (figure 4).

4.2.3 Marker Beacon

a. Set TI rf output level to -50 dB mW and sequentially select TI frequencies of 74.60, 75.00 (marker beacon), and 75.40 MHz. TI display status must be as follows:

DISPLAY	INDICATION
RDL/DDM/MOD	95.0 MOD (%)
AUDIO STATUS	STANDARD
FREQUENCY	(Frequency selected) MHz
MODE	MB
RF LEVEL	50 dB mW
RF STATUS	PH LOCK, LEVEL CAL
TONE SELECT	400 Hz
FUNCTION/CONTROL	No keys lit
DATA ENTRY	No keys lit
RF SELECT	RF FREQ

b. Press 1300 Hz key. The 1300 Hz key indicator lights and the 400 Hz key indicator goes out.
c. Press 3000 Hz key. The 3000 Hz key indicator lights and the 1300 Hz key indicator goes out.
d. Sequentially, press 30 Hz VAR, 9960 FM, 9960 Hz, 1020/AUX, 90 Hz, and 150 Hz keys. Verify no changes occur on the front panel.
e. Press VAR FREQ key. The 3000 Hz key light goes out, the VAR FREQ key, 1020/AUX key, and VAR FREQ indicator light, and the FREQUENCY display is 1000 Hz.
f. Enter a frequency of 10 001 Hz. Verify FREQUENCY display flashes on and off.
g. Press CLEAR key. Enter 4000 Hz. Verify FREQUENCY display indicates 4000 Hz.
h. Press % MOD key. VAR FREQ key light goes out, % MOD key lights, and VAR % MOD indicator lights.
i. Enter 10.0% modulation. Verify RDL/DDM/MOD display flashes on and off.
j. Press CLEAR key. Enter 48.6% modulation. Verify RDL/DDM/MOD display reads 48.6.
k. Press STD key. Display indications must be as specified in step a.

4.2.4 VOR

a. Sequentially, select TI VOR frequencies of 108.00, 113.70, and 117.95 MHz. TI display status must be as follows for each selected frequency.

DISPLAY	INDICATION
RDL/DDM/MOD	FROM, 000.00 RDL (DEG)
AUDIO STATUS	STANDARD

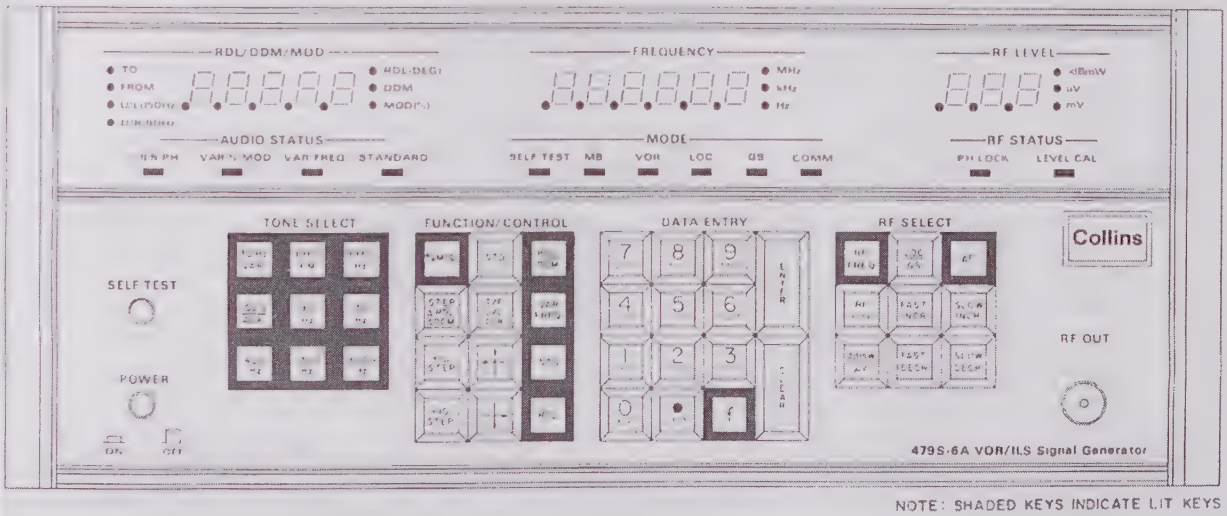

NOTE: SHADED KEYS INDICATE LIT KEYS

Self-Test Mode Display
Figure 5

DISPLAY	INDICATION
FREQUENCY	(Frequency selected) MHz
MODE	VOR
RF LEVEL	50 dB mW
RF STATUS	PH LOCK, LEVEL CAL
TONE SELECT	30-Hz VAR, 9960 FM
FUNCTION/CONTROL	No keys lit
DATA ENTRY	No keys lit
RF SELECT	RF FREQ

b. Press 9960 FM key. The 9960 FM key indicator must turn off.
c. Press 1020/AUX key. The key indicator must turn on.
d. Sequentially, press 90 Hz, 150 Hz, 400 Hz, 1300 Hz, and 3000 Hz keys. Verify no changes occur on the front panel.
e. Set TI frequency to 108.00 MHz.
f. Press T/F U/L D/R key. RDL/DDM/MOD FROM indicator must turn off and TO indicator must turn on.
g. Press STD key. RDL/DDM/MOD TO indicator must turn off and FROM indicator must turn on.
h. Press STEP Δ RDL Δ DDM key. RDL/DDM/MOD indication must increase 30 degrees.
i. Press +10° STEP key. RDL/DDM/MOD indication must increase 10 degrees.
j. Press -10° STEP key. RDL/DDM/MOD indication must decrease 10 degrees.
k. Press and hold ◄+► key. RDL/DDM/MOD indication must increase. Release key.
l. Press and hold ▼+▲ key. RDL/DDM/MOD indication must decrease. Release key.
m. Press RDL/DDM key and enter 123.45 on DATA ENTRY keys. Press DATA ENTRY ENTER key. RDL/DDM/MOD display must indicate 123.45 degrees.
n. Press f key. Key must light and RDL/DDM key light must go out.
o. Press 120° key. Verify RDL/DDM/MOD display indicates 120.00 degrees.
p. Press STD key. RDL/DDM/MOD display must indicate 000.00 degree.

4.2.5 Localizer

a. Sequentially, select TI LOC frequencies of 108.10, 110.10, and 111.95 MHz. TI display status must be as follows for each selected frequency:

DISPLAY	INDICATION
RDL/DDM/MOD	U/L(150 Hz), .000 DDM
AUDIO STATUS	STANDARD
FREQUENCY	(Frequency selected) MHz
MODE	LOC
RF LEVEL	50 dB mW
RF STATUS	PH LOCK, LEVEL CAL
TONE SELECT	90 Hz, 150 Hz
FUNCTION/CONTROL	No keys lit
DATA ENTRY	No keys lit
RF SELECT	RF FREQ

b. Press 1020/AUX key. The 1020 Hz key indicator must light.
c. Press 30 Hz VAR, 9960 FM, 9960 Hz, 400 Hz, 1300 Hz, and 3000 Hz keys, one at a time. Verify no changes occur on the front panel.
d. Press 1020/AUX key. The key light must go out.
e. Sequentially press f key and 0/60° keys. The f key and the Δ ILS PH indicator must light.
f. Press STD key.
g. Press 90 Hz and 150 Hz keys. The key lights must go out.

4.2.6 Glideslope

a. Sequentially, select TI GS frequencies of 329.15, 332.15, and 335.00 MHz. TI display status must be as follows for each selected frequency:

DISPLAY	INDICATION
RDL/DDM/MOD	U/L (150 Hz), .000 DDM
AUDIO STATUS	STANDARD
FREQUENCY	(Frequency selected) MHz
MODE	GS
RF LEVEL	50 dB mW
RF STATUS	PH LOCK, LEVEL CAL
TONE SELECT	90 Hz, 150 Hz
FUNCTION/CONTROL	No keys lit
DATA ENTRY	No keys lit
RF SELECT	RF FREQ

b. Sequentially, press 1020/AUX, 30 Hz VAR, 9960 FM, 9960 Hz, 400 Hz, 1300 Hz, and 3000 Hz keys. Verify no changes occur on the front panel.
c. Sequentially, select TI LOC frequencies of 108.10, 110.10, and 111.95 MHz and press RF SELECT -- LOC/GS key. TI display must change to paired GS frequencies of 334.70, 334.40, and 330.95 MHz respectively.

4.2.7 VHF Communications

a. Sequentially select TI COMM frequencies of 118.000, 134.000, and 151.975 MHz. TI display

status must be as follows for each selected frequency.

DISPLAY	INDICATION
RDL/DDM/MOD	30.0 MOD (%)
AUDIO STATUS	STANDARD
FREQUENCY	(Frequency selected) MHz
MODE	COMM
RF LEVEL	50 -dBmW
TONE SELECT	1020/AUX
FUNCTION/CONTROL	No keys lit
DATA ENTRY	No keys lit
RF SELECT	RF FREQ

b. Press 1020/AUX key. Verify key light and STANDARD indicator go out.
c. Press all remaining TONE SELECT keys one at a time. Verify no changes occur on the front panel.
d. Press STD key.

4.2.8 Localizer DDM

a. Set TI FREQUENCY to 108.10 MHz.
b. Repeatedly press STEP ΔRDL ΔDDM key. RDL/DDM/MOD indication must increase from .000 in the following steps: .046, .093, .155, and .200.
c. Press and hold ⊣⊢ key. RDL/DDM/MOD indication must decrease. Release key.
d. Press and hold ⊢⊣ key. RDL/DDM/MOD indication must increase. Release key.
e. Press RDL/DDM key and enter .400 on DATA ENTRY keys. Press DATA ENTRY ENTER key. RDL/DDM/MOD display must indicate .400 DDM.
f. Press T/F U/L D/R key. RDL/DDM/MOD U/L (150 Hz) indicator must turn off and D/R (90 Hz) indicator must turn on.
g. Press STD key. RDL/DDM/MOD D/R (90 Hz) indicator must turn off and U/L (150 Hz) indicator must turn on.

4.2.9 Glideslope DDM

a. Set TI FREQUENCY to 335.00 MHz.
b. Repeatedly press STEP ΔRDL ΔDDM key. RDL/DDM/MOD indication must increase from .000 DDM in following steps: .045, .091, .175, and .400.
c. Press and hold ⊣⊢ key. RDL/DDM/MOD indication must decrease. Release key.
d. Press and hold ⊢⊣ key. RDL/DDM/MOD indication must increase. Release key.
e. Press RDL/DDM key and enter .800 on DATA ENTRY keys. Press DATA ENTRY ENTER key. RDL/DDM/MOD display must indicate .800 DDM.
f. Press T/F U/L D/R key. RDL/DDM/MOD U/L (150 Hz) indicator must turn off and D/R (90 Hz) indicator must turn on.
g. Press STD key. RDL/DDM/MOD D/R (90 Hz) indicator must turn off and U/L (150 Hz) indicator must turn on.

4.2.10 Frequency Vernier

a. Set TI for an output frequency of 108.000 MHz without modulation (no TONE SELECT keys lit).
b. Set TI rf output level to -6 dB mW and press TI ΔF key for ΔF operation. TI frequency displays between 07 990.0 and 08 010.0.
c. Press and hold TI SLOW DECR key. TI FREQUENCY indication must decrease. Release key.
d. Press and hold TI SLOW INCR key. TI FREQUENCY indication must increase. Release key.
e. Press and hold TI FAST DECR key. TI FREQUENCY indication must decrease. Hold FAST DECR key until display counter frequency decreases to at least 07 950.0.
f. Press and hold TI FAST INCR key. TI FREQUENCY indication must increase. Hold FAST INCR key until display counter frequency increases to at least 08 050.0.

4.2.11 RF Output Level

a. Set TI output frequency to 75.000 MHz and rf output level to -50 dB mW. Delete audio tone.
b. Press TI dB mW/uV key. TI RF LEVEL indication must be 700 μV. Press dB mW/uV key again and RF LEVEL indication must be 50 dB mW.
c. Press and hold TI SLOW DECR key. TI RF LEVEL indication must decrease in 1-dB increments.
d. Press and hold TI SLOW INCR key. TI RF LEVEL indication must increase in 1-dB increments.
e. Press and hold TI FAST DECR key. TI RF LEVEL indication must decrease in 10-dB increments.
f. Press and hold TI FAST INCR key. TI RF LEVEL indication must increase in 10-dB increments.
g. Set TI rf output level to -6 dB mW and press TI RF SELECT -- RF ON/OFF key. Observe following TI displays for proper indication.

DISPLAY	INDICATION
FREQUENCY	------ MHz
RF LEVEL	OFF
RF STATUS	PH LOCK, LEVEL CAL indicators off

h. Press TI RF SELECT -- RF ON/OFF key. Observe following TI displays for proper indication.

DISPLAY	INDICATION
FREQUENCY	75.000 MHz
RF LEVEL	6 dB mW
RF STATUS	PH LOCK, LEVEL CAL indicators lit

4.3 Total Performance Test

4.3.1 Introduction

The total performance test procedures contained in this paragraph may be performed to isolate and/or correct a malfunction before performing the calibration verification procedures. When an incorrect result is obtained during the performance of the test procedures, the applicable alignment/adjustment procedures contained in paragraph 8 should be performed before starting the troubleshooting procedures. If the alignment/adjustment procedures do not correct the malfunction, refer to troubleshooting procedures to isolate the malfunction. The steps contained in the troubleshooting procedures correspond to the steps in the total performance test procedures.

The number in parentheses following the support (test) equipment is the item number of equipment as listed in table 1 which specifically identifies the equipment.

4.3.2 Initial Turn-On

Perform initial turn-on procedure described in paragraph 4.2.1. If malfunction occurs, troubleshoot as described in figure 21.

4.3.3 Self-Test

Perform self-test procedure described in paragraph 4.2.2. If malfunction occurs, troubleshoot as described in figure 21.

Note

A 30-minute warmup period from initial turn-on is required before proceeding with total performance test procedures.

4.3.4 RF Frequency Accuracy

Connect frequency counter (2.7) to TI RF OUT connector. Set TI to frequencies listed below without modulation (NO TONE SELECT keys lit) at -6 dB mW. Results: frequency counter displays TI frequencies within limits given below.

TI FREQUENCY (MHz)	FREQUENCY COUNTER DISPLAY LIMITS (MHz)
74.600	74.599 851 to 74.600 149
75.400	75.399 849 to 75.400 151
108.000	107.999 784 to 108.000 216
117.950	117.949 764 to 117.950 236
329.150	329.149 342 to 329.150 658
335.000	334.999 330 to 335.000 670
118.000	117.999 774 to 118.000 236
151.975	151.974 698 to 151.975 302

4.3.5 RF Output Frequency Response

a. Connect rf power meter (2.4) to TI RF OUT connector.
b. Set TI rf output level to -6 dB mW without modulation (no TONE SELECT keys lit) at frequencies of 74.60, 75.00, 75.40, 108.00, 110.00, 111.95, 114.00, 116.00, 117.95, 329.15, 331.10, 333.50, and 335.00 MHz. Power meter must indicate -6 dB mW within ±0.5 dB at each frequency. Modulation must be removed after each change in frequency.
c. Disconnect power meter from TI.

4.3.6 RF Output Attenuator Accuracy

a. Set TI frequency to 108.000 MHz without modulation (no TONE SELECT keys lit).
b. Set TI rf output level to levels listed below. The change in power meter indication from the -6 dB mW level (measured in paragraph 4.3.5, step b) must be within limits given.

TI RF LEVEL (dB mW)	CHANGE FROM RDNG AT -6-dB mW SETTING	
	NOMINAL (dB)	MIN/MAX LIMITS (dB)
-7	-1	0 to -2
-8	-2	-1 to -3
-10	-4	-3 to -5
-14	-8	-7 to -9
-20	-14	-13 to -15 (record measured change for later use)

c. Connect test equipment to TI as shown in figure 6 without rf amplifiers.

d. Make following instrument control settings.

1. TI

CONTROL	SETTING
FREQUENCY	108.00 MHz
RF LEVEL	20 dB mW
TONE SELECT	No keys lit

2. Step Attenuator (2.5)

CONTROL	SETTING
Attenuation	40 dB

3. Spectrum Analyzer (2.1)

CONTROL	SETTING
Frequency	108.00 MHz
Tuning stabilizer	Off
Bandwidth	10 kHz
Scan width	0.5 MHz
Input attenuation	0 dB
Scan time	10 ms/division
Log reference level	-60 dB mW
Vertical sensitivity	2 dB/division
Video filter	Off
Scan mode	Internal
Scan trigger	Automatic
Display controls	As required

e. Adjust spectrum analyzer frequency control and log reference level attenuators for center screen display of 108.000-MHz signal.

f. Set spectrum analyzer scan width to 200 kHz, tuning stabilizer to on, and adjust frequency control for center screen display.

g. Set spectrum analyzer scan width to zero and set video filter to 10 kHz, and adjust fine frequency control for maximum vertical trace deflection. Using log reference level attenuators, set reference level for center screen display.

h. Set TI rf output level and step attenuator to the following settings and observe spectrum analyzer display. Record change from reference in + or - values.

TI RF OUTPUT LEVEL (dB mW)	STEP ATTEN (2.5) SETTING (dB)
-30	30
-40	20
-50	10
-60	0

i. Determine if TI attenuator is within following tolerances using following equation:

TI attenuator change = A + B - C

Where:

A = Recorded TI rf output level change from -6 to -20 dB mW as recorded in step b.

B = Change in step attenuator from 40-dB reference setting (derived from special calibration data on step attenuator).

C = Recorder display difference from step h.

For example, if the recorded TI rf output level change from -6 to -20 dB mW is -13.9 dB mW, the change in step attenuator from the 40-dB reference setting is -10.3 dB, and the recorded display difference is -0.5, the TI attenuator change is calculated as follows:

TI attenuator change = -13.9 + (-10.3) - (-0.5)
TI attenuator change = -23.7 dB

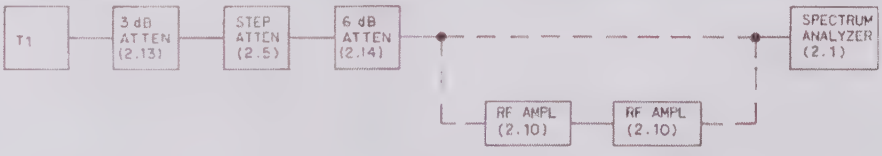

TP5-3313-012

Output Attenuator Accuracy, Equipment Setup
Figure 6

TI NOMINAL RF OUTPUT LEVEL (dB mW)	CHANGE FROM RDNG AT -6-dB mW SETTING	
	NOMINAL (dB)	MIN/MAX LIMITS (dB)
-30	-24	-23 to -25
-40	-34	-33 to -35
-50	-44	-43 to -45
-60	-54	-53 to -55 (record TI calculated change for later use)

j. Set step attenuator (2.5) to 40 dB and insert two rf amplifiers (2.10) in measurement system as shown in figure 6.

k. Adjust spectrum analyzer log reference level attenuators for center screen reference level on display. Ensure that spectrum analyzer fine frequency control is adjusted for maximum trace deflection.

l. Set TI rf output level and step attenuator (2.5) to the following settings, and record change in spectrum analyzer display. Record change from reference in + or - values.

TI RF OUTPUT LEVEL (dB mW)	STEP ATTEN SETTING (dB)
-70	30
-80	20
-90	10
-100	0

m. Determine if TI attenuator is within following tolerances using the same equation that is shown in step i except for the following changes:

A = Recorded TI rf output level change from -6 to -60 dB mW as recorded in step i.

C = Recorded display difference from step l.

TI NOMINAL RF OUTPUT LEVEL (dB mW)	CHANGE FROM RDNG AT -6-dB mW SETTING	
	NOMINAL (dB)	MIN/MAX LIMITS (dB)
-70	-64	-62 to -66
-80	-74	-72 to -76
-90	-84	-82 to -86
-100	-94	-92 to -96

n. Disconnect test equipment from TI.

4.3.7 RF Harmonics

a. Connect spectrum analyzer (2.1) input to TI RF OUT connector. Make the following instrument settings.

TI	
FREQUENCY	75.000 MHz
RF LEVEL	-6 dB mW
TONE SELECT	No keys lit

SPECTRUM ANALYZER (2.1)	
Frequency	250 MHz
Bandwidth	300 kHz
Scan width	50 MHz/division
Input attenuation	20 dB
Scan time	As required (display uncalibrated indicator off)
Log reference level	0 dB mW
Log reference level mode	10 dB log
Log reference level display adjust	As required to set 75-MHz rf signal to top line of graticule
Video filter	Off
Scan mode	Internal
Scan trigger	Automatic

Results: harmonics displayed are below the 75-MHz fundamental as follows:

2nd harmonic (150 MHz)	>30 dBc
3rd harmonic (225 MHz)	>30 dBc
4th harmonic (300 MHz)	>30 dBc
5th harmonic (375 MHz)	>30 dBc

b. Make the following instrument setting changes.

TI	
FREQUENCY	108.000 MHz
TONE SELECT	No keys lit

SPECTRUM ANALYZER (2.1)	
Frequency	300 MHz
Scan time	As required (display uncalibrated indicator off)
Log reference level display adjust	As required to set 108-MHz rf signal to top line of graticule

Results: harmonics displayed are below the 108-MHz fundamental as follows:

2nd harmonic (216 MHz)	>30 dBc
3rd harmonic (324 MHz)	>30 dBc
4th harmonic (432 MHz)	>30 dBc
5th harmonic (540 MHz)	>30 dBc

c. Make the following instrument setting changes.

TI

FREQUENCY	329.150 MHz
TONE SELECT	No keys lit

SPECTRUM ANALYZER (2.1)

Frequency	0 MHz
Scan width mode	0-1250 MHz
Scan time	As required (display uncalibrated indicator is off)
Log reference level display adjust	As required to set 329.15-MHz signal to top line of graticule

Results: harmonics displayed are below the 329.15-MHz fundamental as follows:

2nd harmonic (658 MHz)	>25 dBc
3rd harmonic (987 MHz)	>25 dBc

d. Disconnect spectrum analyzer from TI.

4.3.8 Broadband Noise (SSB) and Close-In Spurious Signals

Note

The TI rf frequency broadband noise and close-in spurious signals are measured by using a notch filter to reject the mixed-down TI fundamental frequency and pass the TI sideband noise. This technique is used rather than viewing the signal directly on the spectrum analyzer due to the inadequacy of the analyzer sideband noise specification.

Performance of this test assumes the sideband noise of the local oscillator signal generator (2.11) is lower than the TI sideband noise specification. If the sideband noise specification of the signal generator being used as a local oscillator is not known or specified, replace the TI with a signal generator identical to the local oscillator and measure their combined output noise at the stated test frequencies. For the signal generator to be acceptable for use, the measured sideband noise of the two signal generators must be 10 dB less than the TI noise specification. Measurements on the HP 8640B indicate that it is an acceptable signal generator for use as a local oscillator.

4.3.8.1 Marker Beacon

a. Make the following instrument settings.

TI

FREQUENCY	75.000 MHz
RF LEVEL	-10 dB mW
TONE SELECT	No keys lit
ΔF	Off

SIGNAL GENERATOR (2.11)

Frequency	85.020
Output level	+7 dB mW
AM	Off
FM	Off
Phase lock	On

STEP ATTENUATOR (2.5)

Attenuation	60 dB

SPECTRUM ANALYZER (2.1)

Frequency	10.0 MHz
Tuning stabilizer	Off
Bandwidth	30 kHz
Scan width	0.5 MHz/division
Input attenuation	0 dB
Scan time	5 ms/division
Log reference level	-50 dB mW
Log reference level mode	10 dB log
Video filter	Off
Scan mode	Internal
Scan trigger	Automatic

b. Connect test equipment as shown in figure 7.
c. Adjust spectrum analyzer frequency control and log reference level attenuators for center screen display of 10.020-MHz if frequency.
d. Make the following spectrum analyzer control settings.

CONTROL	SETTING
Tuning stabilizer	On
Bandwidth	0.3 kHz
Scan width	20 kHz/division
Scan time	10 seconds/division
Video filter	10 Hz
Scan mode	Manual

e. Adjust spectrum analyzer manual scan, frequency tune, and reference log level attenuators for full-screen amplitude display one division to right of center screen.
f. Set signal generator (2.11) frequency to 85.000 MHz.
g. Set step attenuator (2.5) to 0 dB. Set spectrum analyzer scan mode to single and press start sweep switch. The reference level (top horizontal graticule) is now -60 dB mW. Check spurious signals at 75 MHz ±25 kHz and ±50 kHz. Results: spurious signals are greater than 80 dB below 75-MHz carrier.
h. Make the following spectrum analyzer control setting.

CONTROL	SETTING
Bandwidth	3 kHz
Scan width	100 kHz/division

Results: any spurious signal present is greater than 80 dB below 75-MHz carrier.

1.3.8.2 VOR/LOC

a. Make the following instrument settings.

TI

FREQUENCY	117.95 MHz
RF LEVEL	-10 dB mW
TONE SELECT	No keys lit
ΔF	Off

SIGNAL GENERATOR (2.11)

Frequency	127.970 MHz
Output level	+7 dB mW
AM	Off
FM	Off
Phase lock	On

STEP ATTENUATOR (2.5)

Attenuation	60 dB

SPECTRUM ANALYZER (2.1)

Frequency	10.0 MHz
Tuning stabilizer	Off
Bandwidth	30 kHz

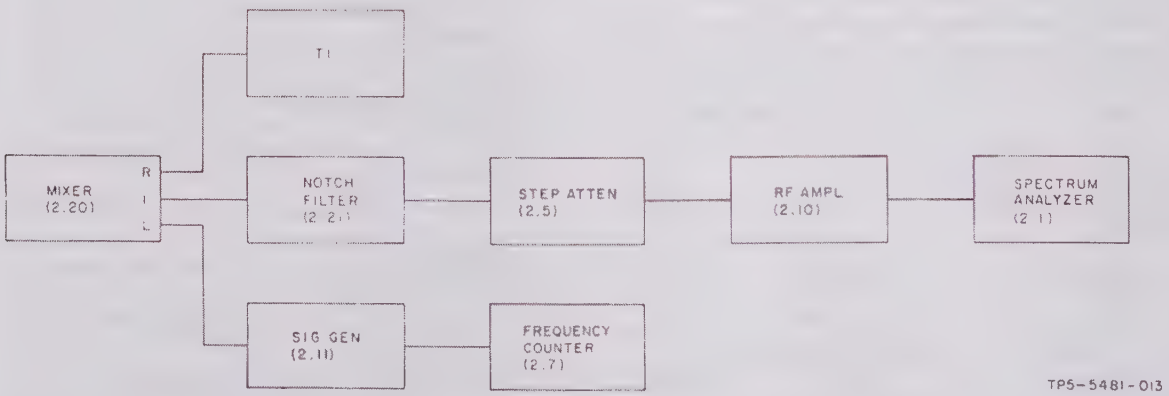

Broadband Noise (SSB) and Close-In Spurious Signals, Test Equipment Setup
Figure 7

SPECTRUM ANALYZER (2.1)	
Scan width	0.5 MHz/division
Input attenuation	0 dB
Scan time	5 ms/division
Log reference level	-50 dB mW
Log reference level mode	10 dB log
Video filter	Off
Scan mode	Internal
Scan trigger	Automatic

b. Adjust spectrum analyzer frequency control and log reference level attenuators for center screen display of 10.020-MHz if frequency.
c. Make the following spectrum analyzer control settings.

CONTROL	SETTING
Tuning stabilizer	On
Bandwidth	0.3 kHz
Scan width	20 kHz/division
Scan time	10 seconds/division
Video filter	10 Hz

d. Adjust spectrum analyzer manual scan, frequency tune, and reference log level attenuators for full-screen amplitude display one division to right of center screen.
e. Set signal generator (2.11) frequency to 127.950 MHz.
f. Set step attenuator (2.5) to 0 dB. Set spectrum analyzer scan mode to single and press start sweep switch. The reference level (top horizontal graticule) is now -60 dB mW. Check spurious signals at 117.95 MHz ±25 kHz and ±50 kHz. Results: spurious signals are greater than 80 dB below 117.95-MHz carrier.
g. Make the following spectrum analyzer control settings.

CONTROL	SETTING
Bandwidth	1 kHz
Scan width	100 kHz/division
Video filter	Off

Results: any spurious signal present is greater than 80 dB below 117.95-MHz carrier.

h. Make the following spectrum analyzer control settings.

CONTROL	SETTING
Bandwidth	0.3 kHz
Scan width	20 kHz/division
Video filter	10 Hz
Scan mode	Single
Storage	On

i. Press start sweep pushbutton on spectrum analyzer. Adjust display controls as required. Note level down from full-screen reference of step d of highest average noise signal at ±40 kHz from center frequency. Results: highest average noise is greater than 97 dB below reference level.

4.3.8.3 Glideslope

a. Make the following instrument settings.

TI	
FREQUENCY	335.000 MHz
RF LEVEL	-10 dB mW
TONE SELECT	No keys lit
ΔF	Off

SIGNAL GENERATOR (2.11)	
Frequency	345.050 MHz
Output level	+7 dB mW
AM	Off
FM	Off
Phase lock	On

STEP ATTENUATOR (2.5)	
Attenuation	60 dB

SPECTRUM ANALYZER (2.1)	
Frequency	10.0 MHz
Tuning stabilizer	Off
Bandwidth	100 kHz
Scan width	1 MHz/division
Input attenuation	0 dB
Scan time	5 ms/division

SPECTRUM ANALYZER (2.1)

Log reference level	-50 dB mW
Log reference level mode	10 dB log
Video filter	Off
Scan mode	Internal
Scan trigger	Automatic

b. Adjust spectrum analyzer frequency control and log reference level attenuators for center screen display of 10.050-MHz if frequency.
c. Make the following spectrum analyzer control settings.

CONTROL	SETTING
Tuning stabilizer	On
Bandwidth	1 kHz
Scan width	50 kHz/division
Video filter	100 Hz
Scan time	5 seconds/division
Scan mode	Manual

d. Adjust spectrum analyzer manual scan, frequency tune, and reference log level attenuators for full-screen amplitude display one division to right of center screen.
e. Set signal generator (2.11) frequency to 345.000 MHz.
f. Set step attenuator (2.5) to 0 dB. Set spectrum analyzer scan mode to single and press start sweep switch. The reference level (top horizontal graticule) is now -60 dB mW. Check spurious signals at 335 MHz ±25 kHz, ±50 kHz, ±75 kHz, and ±100 kHz. Results: spurious signals are greater than 80 dB below 335-MHz carrier.
g. Set spectrum analyzer scan width to 100 kHz/division and scan time to 10 seconds/division. Results: any spurious signal present is greater than 80 dB below 335-MHz carrier.
h. Disconnect test equipment from TI.

4.3.9 RF Frequency Vernier

a. Connect frequency counter (2.7) to TI RF OUT connector.
b. Set TI to 335.000 MHz with no modulation at -6 dB mW.
c. Press TI ΔF key. Frequency counter displays between 335.0000 and 335.0025 MHz.
d. Press and hold TI SLOW DECR key. TI FREQUENCY indication must decrease. Release key.
e. Press and hold TI FAST DECR key. TI FREQUENCY indication must decrease. Hold FAST DECR key until display counter frequency indicates 34 850.0 kHz. Release key. Counter must indicate a frequency between 334.850 000 and 334.852 500 MHz.
f. Press and hold TI SLOW INCR key. TI FREQUENCY indication must increase. Release key.
g. Press and hold TI FAST INCR key. TI FREQUENCY indication must increase. Hold FAST INCR key until display counter frequency indicates 35 050.0 kHz. Release key. Counter must indicate a frequency between 335.050 000 and 335.052 500 MHz.
h. Disconnect counter from TI.

4.3.10 Audio Tone Frequency Accuracy

Note

Since all of the audio tones are derived from the same reference crystal, only the frequency accuracy of one tone is measured.

a. Connect frequency counter (2.7) to TI AUX output on rear panel.
b. Set TI output frequency to 108.00 MHz and measure period of 30-Hz reference signal. Frequency counter must indicate between 33 331.67 and 33 335.00 μs (30.0015 and 29.9985 Hz).
c. Disconnect frequency counter from TI.

4.3.11 Audio Tone Distortion

a. Connect distortion analyzer (2.6) to TI AUX output on rear panel. Set TI to 108.00 MHz and measure distortion. Results: distortion is less than 0.25%.
b. Connect distortion analyzer (2.6) to TI COMP output on rear panel. Set TI for output frequencies, tones, and percent modulation shown below, and measure distortion.

RF FREQ (MHz)	TONE	% MOD	MAX DISTORTION (%)
108.000	30 Hz VAR	30	0.25
108.000	30 Hz VAR	9	1.00
108.000	9960 Hz (not 9960 FM)	30	0.50
108.000	9960 Hz (not 9960 FM)	9	1.50
108.000	1020 Hz	30	0.50
108.00	14000 Hz	30	1.00
108.00	14000 Hz	9	2.00

RF FREQ (MHz)	TONE	% MOD	MAX DISTORTION (%)
108.100	3000 Hz	90	2.00
108.100	90 Hz	20	0.25
108.100	90 Hz	6	1.00
108.100	150 Hz	20	0.25
108.100	150 Hz	6	1.00
108.100	1020 Hz	30	0.50
75.000	3000 Hz	95	1.00
75.000	3000 Hz	30	1.00

c. Disconnect distortion analyzer from TI.

4.3.12 AM Percent Modulation

Note

There are two methods available for measuring the AM modulation of the TI to the required accuracy. The first method, beginning at 4.3.12.1, uses a modulation meter (2.17) and distortion analyzer (2.6) to measure both the amplitude modulation and rf distortion.

In case the modulation meter is unavailable, an alternate procedure using a spectrum analyzer (2.1) is provided. The alternate procedure cannot, however, verify rf distortion levels. This alternate procedure preliminary operation begins at 4.3.12.2.

4.3.12.1 AM Modulation and RF Distortion Testing (Using a Modulation Meter)

a. Connect equipment as shown in figure 8.
b. Make the following instrument settings.
1. TI

CONTROL	SETTING
FREQUENCY	113.70 MHz
RF LEVEL	-6 dB mW
TONE SELECT	30 Hz VAR
% MOD	30%

2. Modulation Meter

CONTROL	SETTING
Tuning	Auto
High pass (Hz)	10
Low pass/ De-emphasis	Out (low pass (kHz))/15
Peak	$\frac{\text{PK-PK}}{2}$
Range	100
Function	% AM
Level control	Fully ccw (in detent)

c. Modulation meter must indicate between 29.3 and 30.7% modulation.
d. Measure distortion of demodulated rf signal with distortion analyzer. Measured distortion must be <1.0%.

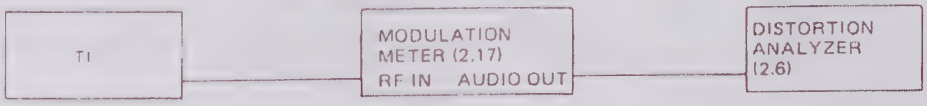

TP5-5477-011

AM Modulation and RF Distortion Equipment Setup No 1 Using Modulation Meter
Figure 8

e. Repeat steps c and d selecting TI rf frequencies, modulating tones, and AM levels listed below. Note filter settings on the modulation meter. Modulation levels and distortions measured must meet limits specified.

f. Connect equipment as shown in figure 9.

TI FREQ (MHz)	MODULATING TONE (Hz)	AM MOD (%)	MODULATION METER		MEASURED MODULATION LIMITS (%)		MEASURED DISTORTION (%)
			RANGE	LOW-PASS FILTER (kHz)	MIN	MAX	
113.70	30 Hz VAR	5	10	15	4.75	5.25	<1.5
113.70	9960 (not 9960 FM)	30	100	120	29.3	30.7	<1.5
113.70	9960 (not 9960 FM)	5	10	120	4.75	5.25	<2.0
113.70	1020 (ident)	30	100	15	29.3	30.7	<1.0
113.70	3000 (AUX audio)	30	100	15	28.5	31.5	<2.0
113.70	14000 (AUX audio)	35	100	120	32.6	37.4	<3.0
110.10	90	20	10	15	19.50	*20.50	<1.0
110.10	90	5	10	15	4.75	5.25	<1.5
110.10	150	20	10	15	19.50	*20.50	<1.0
110.10	150	40	100	15	38.0	42.0	<1.5
110.10	1020 (ident)	30	100	15	29.3	30.7	<1.0
110.10	4000 (AUX audio)	30	100	15	28.5	31.5	<1.5
110.10	4000 (AUX audio)	5	10	15	4.65	5.35	<3.0
332.15	90	40	100	15	39.0	41.0	<1.2
332.15	90	10	10	15	9.50	10.50	<3.0
332.15	150	40	100	15	39.0	41.0	<1.2
332.15	150	80	100	15	76.0	84.0	<3.0
332.15	1000 (AUX audio)	30	100	15	28.5	31.5	<2.0
75.00	400	95	100	15	90.3	99.7	<4.0
75.00	1300	95	100	15	90.3	99.7	<4.0
75.00	3000	95	100	15	90.3	99.7	<4.0
75.00	100 (AUX audio)	97	100	15	90.2	100.0	<4.0
75.00	100 (AUX audio)	15	10	15	13.95	*16.05	<5.0

*Modulation meter range 10%; disregard overrange indication.

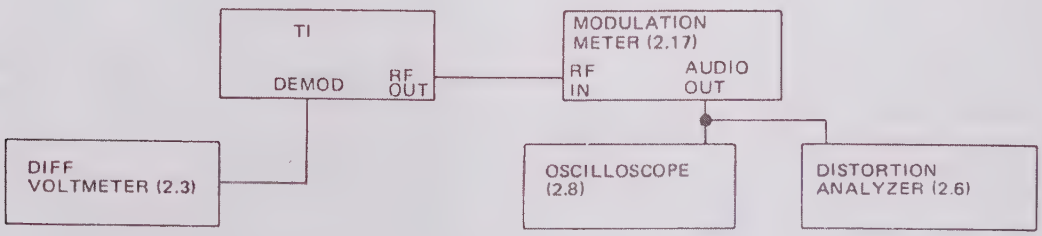

TP5-5478-011

AM Modulation and RF Distortion Equipment Setup No 2 Using Modulation Meter
Figure 9

g. Set TI rf frequency to 332.00 MHz and delete 90-Hz modulating tone.
h. Record 150-Hz signal level indicated on differential voltmeter.
i. Delete 150-Hz modulating tone.
j. Connect audio oscillator (2.18) to TI EXT MOD input.
k. Set audio oscillator to produce a 150-Hz signal 2.00 times the value recorded in step h at the TI DEMOD output as measured on differential voltmeter
l. Modulation meter must indicate between 75 and 85% AM
m. Increase audio oscillator level to produce 90% modulation as measured on the modulation meter.
n. Distortion analyzer must indicate <4% distortion. Oscilloscope signal display must not show clipping at positive or negative peaks.
p. Disconnect test equipment from TI. Proceed to 4.3.13

4.3.12.2 AM Modulation Testing Procedure Using a Spectrum Analyzer

Note

A spectrum analyzer is used as a linear detector in the zero scan mode to detect the AM modulated marker beacon, VOR, localizer, and glideslope rf signals. The detected ac and dc signals from the spectrum analyzer vertical output are measured with a true rms voltmeter and dc dvm to determine the percent of modulation. The spectrum analyzer used must be linear and the vertical output dc offset voltage (V dc) must be known.

Explanation:

Percent modulation calculated from a detected rf signal =

$$\frac{V_{peak}}{V\ dc} \times 100, \text{ or } \frac{1.414\ V_{rms}}{V\ dc} \times 100$$

If V dc = 0.2828, then

Percent modulation =

$$\frac{1.414\ V_{rms}}{0.282} \times 100, \text{ or } \frac{V_{rms}}{0.2} \times 100$$

For the relationship of percent of modulation ($\frac{V\ rms}{0.2} \times 100$) to be applicable using the spectrum analyzer, its vertical output dc voltage must be set to -282.8 mV plus its vertical output dc offset voltage.

Performance of the following section ensures the spectrum analyzer linearity to be adequate and determines its vertical output dc offset voltage for later use in measuring AM modulation.

a. Connect equipment as shown in figure 10 and make the following instrument settings.

1. Signal Generator (2.11)

CONTROL	SETTING
Frequency	30.0 MHz
Output level	+7 dB mW
AM	Off
FM	Off

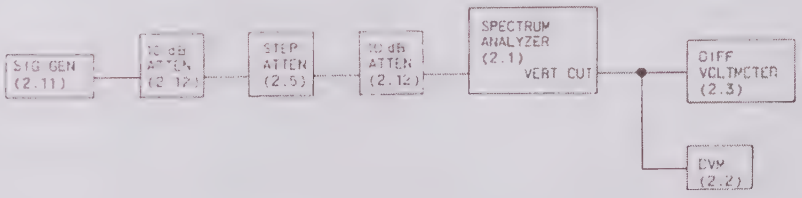

TPS-3309-C12

Spectrum Analyzer Linearity Check, Equipment Setup
Figure 10

2. Step Attenuator (2.5)

CONTROL	SETTING
Attenuation	20 dB

3. DVM (2.2)

CONTROL	SETTING
Function	Dc volts
Range	2

4. Spectrum Analyzer (2.1)

CONTROL	SETTING
Frequency	30 MHz
Tuning stabilizer	Off
Bandwidth	300 kHz
Scan width	200 kHz/division
Input attenuation	10 dB
Scan time	2 ms/division
Linear sensitivity	2 mV/division
Vertical sensitivity	Linear
Video filter	Off
Scan mode	Internal
Scan trigger	Automatic
Display controls	As required

b. Adjust spectrum analyzer frequency and linear sensitivity controls for center screen display of 30-MHz signal.

c. Set spectrum analyzer tuning stabilizer to on and scan width to zero, and adjust frequency controls for peak amplitude indication (maximum dc voltage indication on dvm). Maintain peaked condition during this procedure.

Note

Record all voltages in steps d, e, and f to the nearest tenth millivolt.

d. Adjust spectrum analyzer sensitivity control for a 200 ±1-mV dc indication on dvm. Record 200 ±1-mV indication as V_1.

e. Set step attenuator (2.5) to 30 dB and record dvm indication as V_2.

f. Set step attenuator (2.5) to 10 dB and record dvm indication as V_3.

g. Calculate $V_{OFF\ 1}$ and $V_{OFF\ 2}$ as follows:

$$V_{OFF\ 1} = \frac{V_1 - R_1 V_2}{1 - R_1}$$

$$V_{OFF\ 2} = \frac{V_3 - R_2 V_1}{1 - R_2}$$

Where: $V_{OFF\ 1}$ = Offset voltage no 1

$V_{OFF\ 2}$ = Offset voltage no 2

V_1 = Recorded voltage no 1 (20-dB setting)

V_2 = Recorded voltage no 2 (30-dB setting)

V_3 = Recorded voltage no 3 (10-dB setting)

R_1 = Voltage ratio derived from calibration data on step attenuator from 20- to 30-dB step (voltage ratio = antilog $\frac{dB}{20}$).

R_2 = Voltage ratio derived from calibration data on step attenuator from 10- to 20-dB step (voltage ratio = antilog $\frac{dB}{20}$).

For example: If V_1 = -200.0 mV

V_2 = -44.9 mV

V_3 = -696.0 mV

R_1 = 3.1623/1 (10.00 dB)

R_2 = 3.1732/1 (10.03 dB)

$$V_{OFF\ 1} = \frac{-200.0 - (3.1623 \times -44.9)}{1 - 3.1623} = 26.8 \text{ mV}$$

$$V_{OFF\ 2} = \frac{-696.0 - (3.1732 \times -200.0)}{1 - 3.1732} = 28.2 \text{ mV}$$

h. Spectrum analyzer linearity is adequate for amplitude modulation calibration verification procedure and measurements if $V_{OFF\ 1}$ equals $V_{OFF\ 2}$ within ±2 mV.

i. Determine average of $V_{OFF\ 1}$ and $V_{OFF\ 2}$ and record as V_{OFF} for later use. Calculate V_{OFF} using the following equation

$$V_{OFF} = \frac{V_{OFF\ 1} + V_{OFF\ 2}}{2}$$

For example

$$V_{OFF} = \frac{26.8 + 28.2}{2} = 27.5 \text{ mV}$$

4.3.12.2.1 AM Modulation

a. Connect TI to test equipment as shown in figure 4-11.

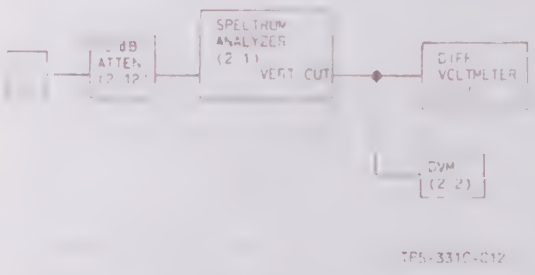

AM Modulation Equipment Setup No 1 Using Spectrum Analyzer
Figure 4-11

b. Make the following instrument settings.

1. TI

CONTROL	SETTING
FREQUENCY	113.70 MHz
RF LEVEL	23 -dBmW
TONE SELECT	30 Hz VAR (9960 FM off)
% MOD	30%

2. DVM (2-2)

CONTROL	SETTING
Function	Dc volts
Range	2

3. Spectrum Analyzer (2-1)

CONTROL	SETTING
Frequency	113.7 MHz
Tuning stabilizer	Off
Bandwidth	300 kHz
Scan width	200 kHz/division
Input attenuation	10 dB
Scan time	2 ms/division
Linear sensitivity	2 mV/division
Vertical sensitivity	Linear
Video filter	Off
Scan mode	Internal
Scan trigger	Automatic
Display controls	As required

c. Adjust spectrum analyzer frequency and linear sensitivity controls for center screen display of 113.70-MHz signal.

d. Set spectrum analyzer tuning stabilizer to on and scan width to zero, and adjust frequency controls for peak amplitude indication (maximum dc voltage indication on dvm). Maintain peaked condition during remainder of procedure.

e. Adjust spectrum analyzer linear sensitivity control for a voltage equal to -282.8 mV + V_{OFF}. Use value for V_{OFF} determined in paragraph 4.3.12.2, step i. For example:

Spectrum analyzer output voltage (V_{OFF})

= -282.8 mV + V_{OFF}

= -282.8 mV + 27.5 mV

= -255.3 mV

f. Measure ac level with true rms differential voltmeter.

g. TI percent of modulation equals $\frac{Vrms}{0.2} \times 100$. Measured modulation must be between 29.25 and 30.75%.

h. Repeat steps b through g selecting TI output frequencies, modulating tones, and AM levels listed below. Measured modulation levels must be between limits specified.

Note

The modulation level output for the 1020-Hz ident tone is always 30%, regardless of the TI modulation display indication.

TI FREQ (MHz)	MODULATING TONE (Hz)	AM MOD (%)	MEASURED LIMITS % MIN	MAX
113.70	9960	30	29.25	30.75
113.70	14000 (AUX audio)	35	32.55	37.45
110.10	90	20	19.50	20.50
110.10	150	20	19.50	20.50
110.10	1020 (Ident)	30	29.25	30.75
110.10	4000 (AUX audio)	30	28.50	31.50
332.15	90	40	39.00	41.00
332.15	90	80	76.00	84.00
332.15	150	40	39.00	41.00
332.15	150	80	76.00	84.00
75.00	1300	95	90.25	99.75
75.00	1300	97	91.67	100.00

i. Connect test equipment as shown in figure 12.
j. Set TI rf frequency to 332.00 MHz and delete 90-Hz modulating tone.
k. Record 150-Hz signal level at TI DEMOD output indicated on differential voltmeter.
l. Delete 150-Hz modulating tone.
m. Connect audio oscillator (2.18) to TI EXT MOD input.
n. Set audio oscillator to produce a 150-Hz signal 2.00 times the value record in step k at TI DEMOD output as measured on differential voltmeter.
o. Repeat steps b through g. Measured modulation must be between 75 and 85%. Spectrum analyzer must not indicate clipping on signal peaks.
p. Disconnect test equipment from TI.

4.3.13 DDM Accuracy

Note

Since the DDM's are generated digitally and do not depend on the accuracy ratio of precision resistors, only the glideslope DDM's are verified.

4.3.13.1 DDM On-Course Accuracy

a. Set TI frequency to 335.00 MHz.
b. Connect true rms differential voltmeter (2.3) to TI COMP output on rear panel.
c. Measure and record 90- and 150-Hz tone levels for 0.000 DDM setting. Delete undesired tone on TONE SELECT keys. Divide measured value of one tone by the other tone to determine voltage ratio. Results: calculated voltage ratio must be within 0.999 75 and 1.000 25 (1.000 00 nominal).
d. Connect true rms differential voltmeter (2.3) to TI DEMOD output on rear panel.
e. Measure and record 90- and 150-Hz tone levels for 0.000 DDM. Delete undesired tone on TONE SELECT keys. Divide measured value of one tone by the other tone to determine voltage ratio. Results: calculated voltage ratio must be between 0.997 45 and 1.002 55 (1.000 00 nominal).
f. Disconnect true rms differential voltmeter from TI.

4.3.13.2 DDM Off-Course Accuracy

a. Connect resistive divider (2.16) input to TI COMP output on rear panel.
b. Connect true rms differential voltmeter (2.3) to resistive divider output.
c. Delete 150-Hz tone.
d. Measure and record 90-Hz tone levels for 0.045, 0.400, 0.750, and 0.790 DDM settings.
e. Add 150-Hz tone and delete 90-Hz tone.
f. Measure and record 150-Hz tone levels for 0.045, 0.400, 0.750, and 0.790 DDM settings.
g. Calculate voltage ratio by dividing 150-Hz tone by 90-Hz tone level for each DDM setting. Results: calculated voltage ratios must be within limits specified below.

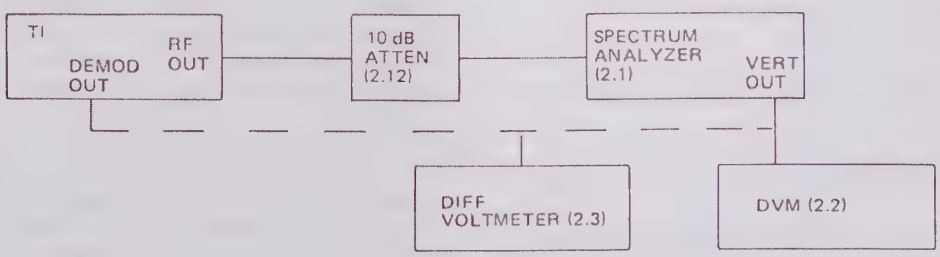

AM Modulation, Equipment Setup No 2 Using Spectrum Analyzer
Figure 12

DDM (UP/ DOWN)	NOMINAL	LIMITS MINIMUM	LIMITS MAXIMUM
0.045	1.119 21	1.118 64	1.119 77
0.400	3.000 00	2.998 00	3.002 00
0.750	31.000 0	30.636 2	31.372 3
0.790	159.00	132.61	198.38

h. Set DDM to 0.045 and press TI FUNCTION/CONTROL -- T/F U/L D/R key. Measure and record 90- and 150-Hz tone levels for 0.045, 0.400, 0.750, and 0.790 DDM settings. Record level for both 90- and 150-Hz tones at each DDM setting before proceeding to next DDM setting. The 90- and 150-Hz tones are added and deleted through TONE SELECT keys.

i. Calculate voltage ratio by dividing 90-Hz tone level by 150-Hz tone level. Results: voltage ratio must be within limits specified in step g.

k. Disconnect test equipment from TI.

1.3.11 ILS Phase (90 150-Hz Composite Signal)

Note

0-degree phase difference between the 90- and 150-Hz waveforms is defined as the point where both waveforms pass through zero in the same direction at the same time. The TI tolerance is the amount of deviation from the in-phase condition just described specified in terms of 150-Hz degrees. The TI phase difference between the two tones is normally fixed at 0 degree but can be selected to be 60 degrees. The phase difference between the 90- and 150-Hz signals is verified to be within tolerance at 0 and 60 degrees by measuring amplitude levels at selected points of the composite signal with an oscilloscope. The peak amplitude level of the composite signal at any point in time may be determined from the following formula.

$$A = A_1 \text{ SIN}(2\pi\ 150t + \emptyset) + A_2 \text{ SIN } 2\pi\ 90t$$

where:

A_1 = peak amplitude of 150-Hz signal

A_2 = peak amplitude of 90-Hz signal

$\emptyset$ = phase difference between the two signals.

t = time

Analysis of this equation for various periods of time and signal phase differences show the following composite waveform amplitude characteristics:

1. The voltage difference between the peaks of the waveforms as shown in figures 14 and 15 to be: 0 V if the amplitudes of the two signals are 1 V rms and if they have 0 degree phase shift; 30 mV if the amplitudes of the two signals are 1 V rms and if the 150-Hz tone leads or lags the 90-Hz tone by 1 degree rather than 0 degree.
2. The voltage peak of the waveform as shown in figure 16 to be between 370 and 418 mV if the amplitude of the two signals are 1 V rms and if the 150-Hz tone phase is between 58 and 62 degrees rather than 60 degrees.

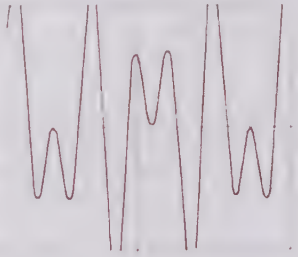

TP5-3312-013

ILS Phase (90/150-Hz Composite Signal), Waveform No 1
Figure 13

a. Set TI output frequency to 108.3 MHz and delete 90-Hz modulation tone.

b. Connect true rms differential voltmeter (2.3) to TI COMP output on rear panel and measure amplitude of 150-Hz tone. Record amplitude.

c. Add 90-Hz modulation tone and delete 150-Hz modulation tone.

d. Measure amplitude of 90-Hz tone and record amplitude.

e. Compare recorded amplitude of 90-Hz modulation tone with recorded amplitude of 150-Hz modulation tone. Amplitude must be equal within 0.5 mV. Record amplitude of 90-Hz tone (recorded voltage as a fraction of a volt to the nearest 0.001 V). The recorded voltage will be used later as a correction factor.

f. Connect oscilloscope (2.8) to TI COMP output on rear panel.

g. Make the following equipment settings.

TI

FREQUENCY	108.3 MHz
TONE SELECT	90 Hz, 150 Hz

OSCILLOSCOPE (2.8)

Coupling	Dc
Remainder of controls	As required

h. Obtain oscilloscope trace and note level difference between amplitude of the two waveform peaks as shown in figures 13 and 14.

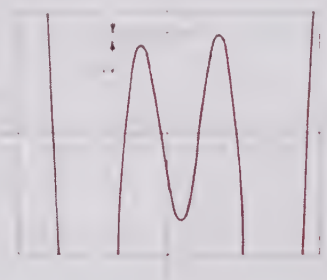

TP5-3311-012

ILS Phase (90/150-Hz Composite Signal), Waveform No 1, Expanded View
Figure 14

i. Multiply 30 mV by correction factor (amplitude of 90-Hz tone) determined in step e. Results: level difference between the two waveform peaks noted in step h must be less than this calculated value.
j. Press TI f and 0/60° keys. Δ ILS PH indicator lights.
k. Measure amplitude of waveform peak as shown in figures 15 and 16. Record this value.
l. Disconnect oscilloscope input from TI and connect to oscilloscope calibrator output. Do not change oscilloscope vertical volts/division setting. Note any deflection factor error and correct waveform measurement recorded in step k, if necessary. Record corrected waveform measurement.
m. Connect dvm (2.2) to TI COMP output on rear panel and measure TI COMP output dc offset voltage. Algebraically subtract this voltage from corrected waveform voltage recorded in step l. Record calculated voltage.
n. Multiply 370 and 418 by the correction factor determined in step e. The product of these calculations determines the waveform voltage limits. Results: calculated voltage recorded in step m must be between these limits.
o. Disconnect dvm from TI.

4.3.15 Radial Accuracy

Note

The TI radial specification for the composite VOR signal (±0.01° before modulation and ±0.05° after demodulation of the rf signal) is referenced to the accuracy of the VOR bearing standard used to calibrate the signal. This specification means the TI will change not more than this specified amount between calibration intervals with respect to the standard used. The TI absolute radial accuracy, therefore, is ±0.01° (audio) or ±0.05° (demodulated rf audio) plus the accuracy of the VOR bearing standard used for calibration. The TI was set at the factory during manufacture for 0.00° measured

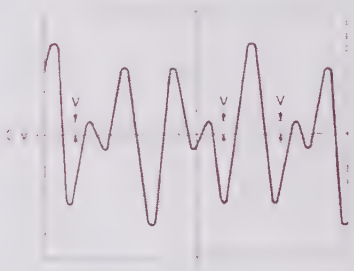

TP5-3306-011

ILS Phase (90/150-Hz Composite Signal), Waveform No 2
Figure 15

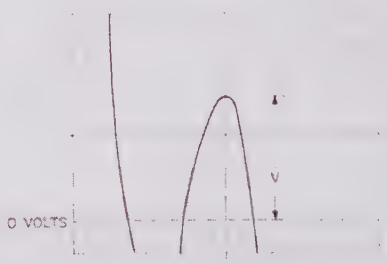

TP5-3307-013

ILS Phase (90/150-Hz Composite Signal), Waveform No 2, Expanded View
Figure 16

radial error at the TI COMP output and verified to measure less than ±0.05° error at the DEMOD output using a Collins 478A-3 Zifor. This VOR standard is specified to be within ±0.01° at VOR zero and to ±0.02° at all other radials referenced to a standard Collins 478A-3 Zifor, which is maintained by Collins Avionics Metrology Department as an absolute VOR standard.

A problem occurs in trying to verify the accuracy of the TI at the end of the TI cycle rate period, due to the accuracy of available VOR bearing standards. The following situation exists.

1. If the same VOR standard (same model and serial number) is used, the TI may be expected to agree with the standard within ±0.01° (audio) and ±0.05° (demodulated rf audio).
2. If a like model VOR standard is used but a different serial number, the TI can only be expected to agree within the accuracy of the standard times 2, plus 0.01° (audio) or 0.05° (demodulated rf audio).
3. If a different model of VOR standard is used, the TI can only be expected to agree within the sum of the tolerances of the two standards, plus 0.01° (audio) or 0.05° (demodulated rf audio).

This procedure was written assuming the same model of standard would be used to verify the TI that was used for initial calibration (Collins 478A-3 Zifor); therefore, the above situation 2 applies. If this is not the case, appropriate tolerances may be substituted in the procedure. After verification of the incoming TI status, the procedure gives instructions to set the TI for 0.00° measured VOR error at the discretion of the user. The TI accuracy after calibrating will then be that of the user's VOR bearing standard.

a. Connect VOR bearing standard (2.9) to TI COMP output on rear panel.
b. Set TI to 108.00 MHz with radial setting of FROM 000.00° and with both 30 Hz VAR and 9960 FM on.
c. Obtain a reading of 000.00° on VOR bearing standard by stepping TI bearing in + or - 0.01° increments.
d. TI RDL/DDM/MOD radial indication must be within the accuracy of the VOR bearing standard multiplied by 2, plus ±0.01°.
e. Connect VOR bearing standard to TI DEMOD output on rear panel.
f. Obtain a heading of 000.00° on VOR bearing standard by stepping TI reading in + or - 0.01° increments.
g. TI RDL/DDM/MOD radial indication must be within the accuracy of the VOR bearing standard multiplied by 2, plus ±0.05°.

Note

Perform steps h through s only if VOR bearing 0° adjustment is required. This adjustment is at the discretion of the user.

h. Press TI POWER switch and release to OFF position.
i. Remove two screws from each side and six screws from bottom of signal generator that secure dust cover, and slide dust cover off of signal generator. Refer to figure 1 in the maintenance section for dust cover screw locations.
j. Press TI POWER switch to ON position.
k. Connect VOR bearing standard to TI COMP output on rear panel, and set TI rf frequency to 108.00 MHz (VOR mode).
l. Obtain a heading of 000.00° on VOR bearing standard by adjusting TI VOR zero adjustment potentiometer A2A2R8 (identified as R8 on left side of modulator bracket).
m. Connect VOR bearing standard to TI DEMOD output on rear panel.
n. Obtain a heading of 000.00° on VOR bearing standard by stepping TI bearing in + or - 0.01° increments.
o. TI RDL/DDM/MOD radial indication must indicate 0.00 ±0.05°.
p. Press TI POWER switch and release to OFF position.
q. Disconnect VOR bearing standard from TI.
r. Install signal generator dust cover and secure with two screws on each side and six screws on the bottom.
s. Press TI POWER switch to ON position.

Note

If VOR bearing standard used cannot measure tracking, a phase meter may be used to measure phase difference between TI 30 Hz reference and 30 Hz variable VOR tones. This check is limited; it does not check

the composite signal. However, because of the method used to generate these signals, it is felt to be adequate. This alternate check begins at step x.

t. Connect VOR bearing standard (2.9) to TI COMP output on rear panel. If TI was not adjusted for 0 (steps h through s), perform step u; if adjustment was made, perform step v.

u. Set TI to radial indications listed below. Reading on VOR bearing standard must be between the limits specified (VOR bearing standard accuracy x 2, plus ±0.01°).

TI RADIAL INDICATION (°)	VOR BEARING STANDARD INDICATION (°)	
	MIN	MAX
030.00	29.95	30.05
060.00	59.95	60.05
090.00	89.95	90.05
120.00	119.95	120.05
150.00	149.95	150.05
180.00	179.95	180.05
210.00	209.95	210.05
240.00	239.95	240.05
270.00	269.95	270.05
300.00	299.95	300.05
330.00	329.95	330.05

v. For radials listed in step u above, the reading on the VOR bearing standard must not exceed ±0.03°.

w. Proceed to step 4.3.16.

x. Connect phasemeter (2.15) reference input to TI COMP output on rear panel and test input to TI AUX output.

y. Press TI STD key and delete 9960 FM signal.

z. Note phasemeter indication as a reference correction factor for measuring VOR tracking.

aa. Set TI to radial indications listed below and delete 9960 FM signal after each radial change. Algebraically add phasemeter indications and reference correction factor noted in step z. Corrected phasemeter indications must be within limits specified. Subtract phasemeter correction factor noted in step z from phasemeter indications.

TI RADIAL INDICATION (°)	MIN (°)	MAX (°)
030.00	29.94	30.06
060.00	59.94	60.06
090.00	89.94	90.06
120.00	119.94	120.06
150.00	149.94	150.06
180.00	179.94	180.06
210.00	209.94	210.06
240.00	239.94	240.06
270.00	269.94	270.06
300.00	299.94	300.06
330.00	329.94	330.06

ab. Disconnect test equipment from TI.

1.3.16 9960-FM Deviation

Note

Performances of paragraph 4.3.16.1 functional test ensures that the 9960-Hz signal is being frequency modulated ±480 Hz within ±5%. Due to TI VOR digital circuit design, if TI meets the requirements of this test, the 9960 FM deviation will be within the 480 ±2-Hz tolerance. However, if a computing counter is available, it is recommended that the deviation test procedure described in paragraph 4.3.16.2 be performed to provide an accurate measurement of the 9960 FM deviation instead of the functional test described in paragraph 4.3.16.1.

1.3.16.1 Functional Test

Note

The procedure outlined in this step uses a scope to view the end of the fifth cycle of the 9960-Hz frequency modulated signal. The width of the jitter at the end of the fifth cycle is proportional to the amount of 9960-Hz FM deviation. The 9960-Hz signal deviating ±480 Hz varies between the two frequencies of 9480 and 10 440 Hz, with periods of 105.485 and 95.785 μs. The time for five cycles of 10 440 Hz is 5 x 95.785 μs (or 478.925 μs) and the time for five cycles of 9480 Hz is 5 x 105.485 μs (or 527.425 μs). The difference between these two time intervals is 48.5 μs (527.425 - 478.925 μs = 48.5 μs). For a 9960-Hz signal with ±480 Hz ±5% FM, the jitter at the end of the fifth cycle would be 48.5 μs ±5% (or ±2.4 μs).

a. Connect oscilloscope (2.8) channel 1 vertical input to TI COMP output on rear panel, and make the following instrument settings.

TI

CONTROL	SETTING
FREQUENCY	108.00 MHz
TONE SELECT	9960 FM only (30 Hz VAR off)

Oscilloscope (2.8)

CONTROL	SETTING
[illegible]	Channel 1
Coupling	Ac
Volts/division	[illegible]
Horizontal display	A intensified
Time/division A	.1 ms
Time/division B	5 μs
A trigger mode	Automatic
A coupling	Ac
A source	Channel 1
A trigger slope	+
B coupling	Ac
B source	Start after delay

b. Center oscilloscope trace vertically and adjust A trigger level for trace triggered at zero crossing of displayed signal.
c. Using delay time positioning control, adjust intensified area of trace to cover end of fifth cycle.
d. Depress horizontal display B delayed; jitter at end of fifth cycle should now be displayed on scope. For TI 9960-Hz signal to be deviating ±480 Hz ±5% or better, width of jitter must be between 46.1 and 50.9 μs.
e. Disconnect scope from TI.

1.3.16.2 Deviation Test

a. Connect test equipment as shown in figure 17.
b. Make the following instrument settings.

TI

FREQUENCY	108.00 MHz
TONE SELECT	9960 FM (30 Hz VAR off)

HP 5360A COMPUTING COUNTER (2.17)

CYCLE RATE	MAX
DIGITS DISPLAYED	5
EXT PUSHBUTTON	Depressed
MEASUREMENT TIME	3X 100 μs

HP 5365A INPUT MODULE

FUNCTION	FREQUENCY
INPUT	A
LEVEL	PRESET
SENSITIVITY	X1
COUPLING	AC

HP 5375A KEYBOARD

REPEAT LOOP:	1K
PAUSE SWITCHES:	OFF
MAIN-NORMAL-SUB:	NORMAL

c. Depress HP 5375A MANUAL pushbutton.
d. Clear registers a, b, c, z, and y by pressing each of five REGISTER EXCHANGE keys followed by CLEAR x.

TP5-5482-013

9960-FM Deviation Verification, Equipment Setup
Figure 17

e. Enter following program on HP 5375A keyboard:

1. LEARN
2. MODULE A
3. a↔x
4. $\overrightarrow{a\ \ x\ \ y}$
5. b↔x
6. xFER PROG
7. MODULE A
8. IFx>a
9. a↔x
10. IFx<b
11. b↔x
12. REPEAT
13. $\overrightarrow{a\ \ x\ \ y}$
14. $\overrightarrow{b\ \ x\ \ y}$
15. -(SUBTRACT)
16. DISPLAY x
17. RUN
18. START

f. Results: counter must indicate peak-to-peak 9960-FM deviation to be between 956 and 964 Hz.
g. Disconnect computing counter from TI.

4.3.17 Scope Trigger

a. Connect oscilloscope (2.8) to REMOTE TUNE connector pin 31 on rear of TI.
b. Monitor oscilloscope display and press TI 30 Hz VAR key several times. Verify a pulse width of 7 to 13 μs each time key is pressed.
c. Disconnect test equipment from TI.

4.3.18 Remote Tune

a. Using digital multimeter (2.2), check following rear REMOTE TUNE connector pins for continuity or open for each listed frequency.

SELECTED TI FREQ	REMOTE TUNE EXTERNAL CONNECTOR PINS																									
	.01 MHz					.005 MHz	0.1 MHz					.005 MHz	1.0 MHz					10 MHz					MODE SELECTS				
	A	B	C	D	E	B	A	B	C	D	E	C	A	B	C	D	E	A	B	C	D	E	A	ND	LE	B	CD
	20	10	12	13	14	28	25	24	23	22	21	29	3	2	1	27	26	8	9	6	5	4	18	17	7	16	15
108.10	O	X	O	O	X	X	X	X	O	O	O	O	X	O	O	X	O	O	X	O	O	X	O	O	X	X	X
109.35	O	O	X	X	O	X	O	X	X	O	O	O	X	O	O	O	X	O	X	O	O	X	O	O	X	X	X
110.50	O	X	O	O	X	X	O	O	X	X	O	O	O	X	O	O	X	X	X	O	O	O	O	O	X	X	X
151.925	X	O	X	O	O	O	X	O	O	O	X	X	X	X	O	O	O	O	O	X	X	O	X	X	O	X	O
123.025	X	O	X	O	O	O	O	X	O	O	X	X	O	X	X	O	O	X	O	X	O	O	X	X	O	X	O
X = Continuity; O = Open Reference pin 11 as common for frequencies Reference pin 9 as common for mode selects																											

4.3.19 Store/Recall

Note

Perform the following tests only on 479S-6A-002 and -003 status.

a. Turn TI POWER to ON.
b. Key in and make note of front-panel setups, and enter a different setup in storage for memory locations 00, 11, 22, 33, 44, 55, 66, 77, 88, and 99.
c. Turn TI POWER to OFF.
d. Turn TI POWER to ON.
e. Recall setups from storage and verify data is same as noted in step b.
f. Turn TI POWER to OFF.

4.3.20 IEEE-488/1978

Note

Perform the following test only for 479S-6A-003 or -004 statuses.

a. Connect external controller (2.30) and GP IB interface cable (2.31) to rear IEEE-STD 488/1978 PROGRAM I/O connector as shown in figure 17A.
b. Turn TI POWER to ON.

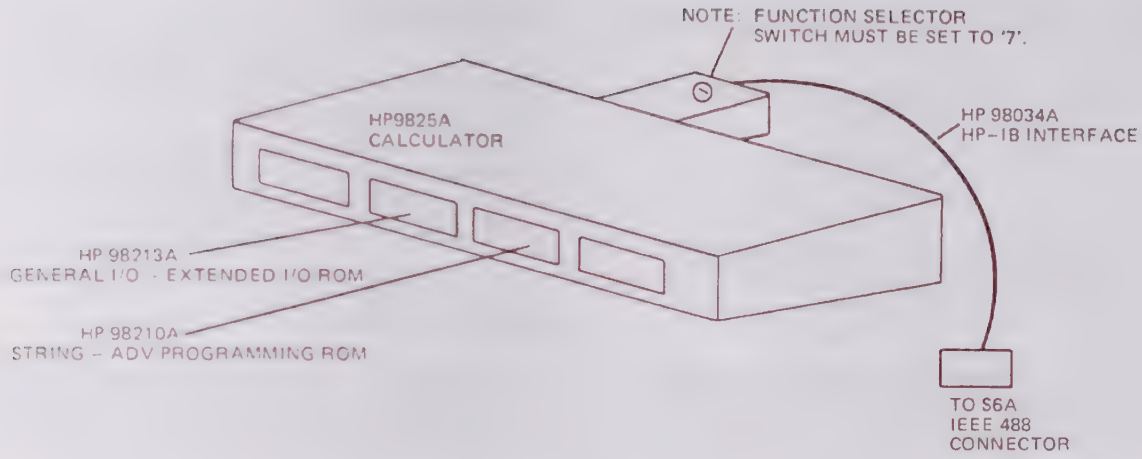

IEEE-488 Test Setup
Figure 12A

c. Enter the following program in the external controller.

```
0: dim A$[128];
 fxd 0
1: ent "enter
 device listen
 address", A$
2: num (A$[1, 1])→
 A; band (A, 31) +
 700→A
3: oni 7, "serq";
 eir 7
4: "enter comman
 d" → A$; dsp A$
5:  "loop": dsp
 A$; ent "", A$
6: dsp "enter
 command ";&A$;
 if A$#"talk";
 wrt A, A$; gto
 "loop"
7: red A, A$; gto
 "loop"
8: "serq": rds (A)
 →B; dsp dtoB;
 stp; eir 7; iret

9: end
*18984
```

d. Make the following entries on external controller and verify proper results.

ENTRY	RESULTS
:	TI perform self-test
GIJ	30 Hz VAR and 9960 FM key lights go out; 9960 Hz and 1020/AUX keys light
?	f key lights
@	Signal generator returns to standard VOR condition

e. Turn TI POWER to OFF and disconnect test equipment.

5. TROUBLESHOOTING

5.1 General

This paragraph provides the troubleshooting procedures for the VOR/ILS signal generator. The procedures are divided into four parts: preliminary procedures, module level troubleshooting, functional level troubleshooting, and posttroubleshooting procedures. The preliminary procedures prepare the signal generator for troubleshooting by removing the dust cover and extending controller/audio assembly A2. The module level troubleshooting procedures isolate the malfunction to the circuit board or module, and the functional level troubleshooting procedures isolate the malfunction to a functional area of the circuit board or module assembly. The posttroubleshooting procedures provide the required information for returning the signal generator to normal operating conditions.

All test points referred to in the troubleshooting procedures are shown on the circuit card component location diagrams and on the schematic diagrams.

When troubleshooting rf modulator assembly A3 and/or synthesizer assembly A4 is required, the rf module assembly consisting of A3 and A4 must be extended out of the chassis to provide access to the circuit cards and test points. The rf module assembly is extended out of the chassis by an rf module extender cable (2.26, table 1). Refer to figure 18 for a wiring diagram of the rf module assembly extender cable. With the rf module assembly on the extender cable, the rf output from A3 is disconnected from the digitally controlled attenuator, and the rf signal is removed from the RF OUT connector on the front panel. When measurements are required at the RF OUT connector, the rf module assembly must be installed in the chassis and interconnected with the chassis wiring harness and the attenuator.

When troubleshooting synthesizer assembly A4, it must be separated from rf modulator assembly A3 to allow access to the rf output. The synthesizer assembly is extended by use of an extender cable (2.27, table 1). Refer to figure 19 for a wiring diagram of the synthesizer assembly extender cable.

Hewlett-Packard 523-0768885

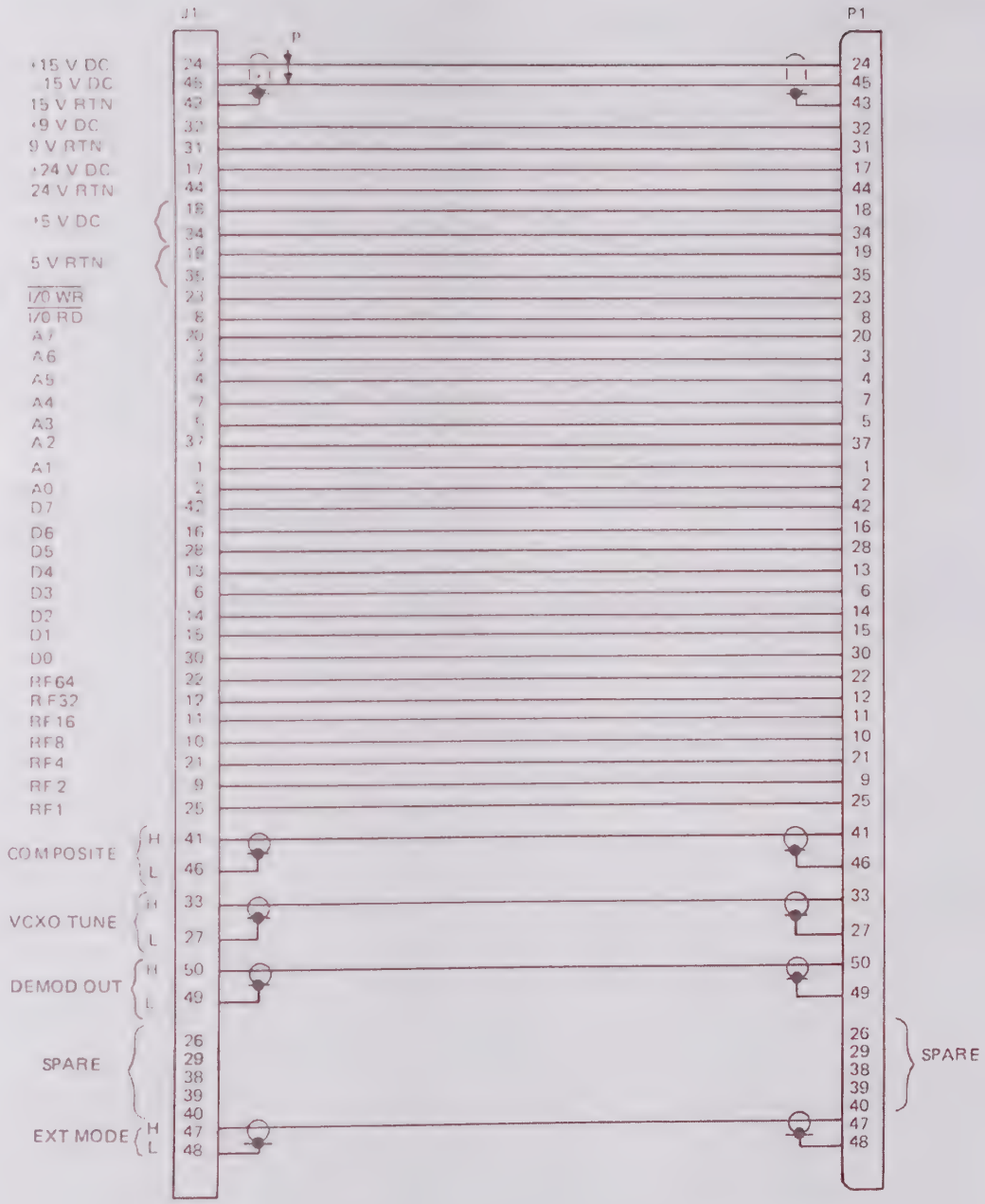

NOTES:

(1) J1, CPN 371-0118-000, MATES WITH WIRING HARNESS CONNECTOR P5.

(2) P1, CPN 371-0181-000, MATES WITH RF MODULATOR CONNECTOR A3A3J4.

TP5-5120-011

RF Module Extender Cable (2.26), Wiring Diagram
Figure 18

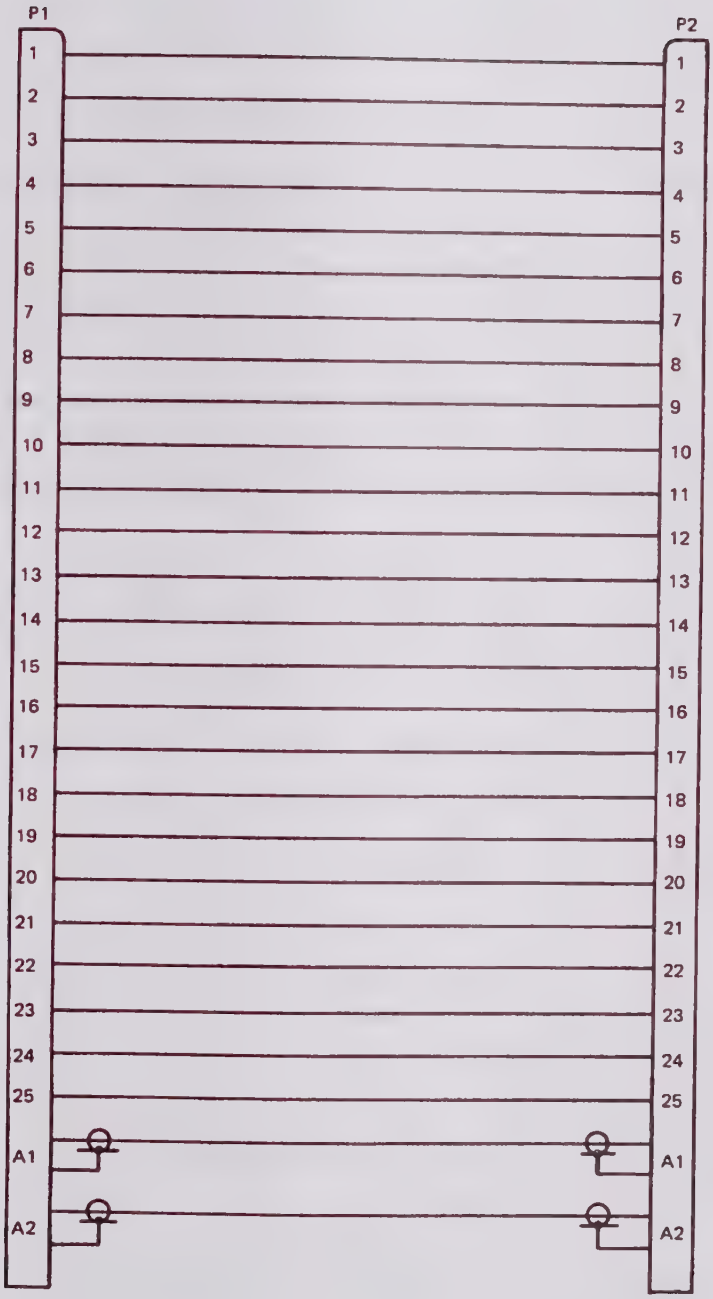

NOTES:

P1, CPN 371–0931–000 MATES WITH SYNTHESIZER A4P1.

P2, CPN 371–0923–000 MATES WITH RF MODULE A3A2J1.

TP5–5589–011

Modulator/Synthesizer Extender Cable (2.27), Wiring Diagram
Figure 19

Troubleshooting of remote tune assembly A8, store/recall assembly A9, and IEEE-488/1978 I/O card is accomplished by installing the cards on an extender card (2.28, table 1).

5.2 *Preliminary Procedure*

a. Remove eight screws and remove module bracket. Refer to figure 44.
b. Loosen four captive fasteners that secure controller/audio assembly A2 to chassis. Lift A2 straight up and align two bottom mounting holes on A2 with two top captive fasteners on chassis, and tighten two captive fasteners to secure A2 in the extended position.
c. Set TI POWER switch to on. If initial turn-on, wait 30 minutes for TI warmup.

5.3 *Module Level Troubleshooting*

The module level troubleshooting procedures are presented in flow-chart format. Refer to figure 20 for an explanation of the flow-chart procedure.

Minimum performance test and total performance test procedure troubleshooting is provided in figures 21 and 22 respectively. Whenever a test or calibration verification procedures fails, enter the troubleshooting procedure at the corresponding test number shown in the flow diagram. The flow charts assume that all preceding tests were successfully completed. Since the troubleshooting flow diagrams contain the test procedure numbers from the minimum and total performance test procedures, the following list provides a cross-reference between the calibration verification procedure test numbers and the minimum and total performance test procedure numbers.

CALIBRATION VERIFICATION STEP NUMBER	TEST DESCRIPTION	MINIMUM OR TOTAL PERFORMANCE TEST STEP NUMBER
3.2	Turn-on operation	4.2.1
3.3	Self-test operation	4.2.2
4.2.1.a	Frequency range, marker beacon	4.2.3
4.2.1.b	Frequency range, VOR	4.2.4
4.2.1.c	Frequency range, localizer	4.2.5
4.2.1.d	Frequency range, glideslope	4.2.6
4.2.1.f	Frequency range, communication	4.2.7
4.2.2	Frequency accuracy	4.3.4
4.2.3	Frequency vernier	4.2.10
4.2.4	Rf harmonics	4.3.7
4.2.5.1	Rf output level, functional operation	4.2.11
4.2.5.2	Frequency response	4.3.5
4.2.5.3	Output attenuator accuracy	4.3.6
4.2.6	Modulation tones, frequency accuracy	4.3.10
4.2.7	Audio distortion	4.3.11
4.2.8.1	VOR tones, functional operation	4.2.4
4.2.8.2	VOR tones, 9960-FM deviation, function verification	4.3.17
4.2.8.3	Radial accuracy	4.3.15
4.2.9.1	Localizer DDM, functional operation	4.2.8
4.2.10.1	Glideslope DDM, functional operation	4.2.9
4.2.10.2	Glideslope DDM, on-course accuracy	4.3.13.1
4.2.10.3	Glideslope DDM, off-course accuracy	4.3.13.2
4.2.11	AM modulation	4.3.12
4.3.2	Broadband noise (SSB) and close-in spurious signals	4.3.8
4.3.3	ILS phase (90/150-Hz composite signal)	4.3.14
4.3.4	9960-FM deviation	4.3.16

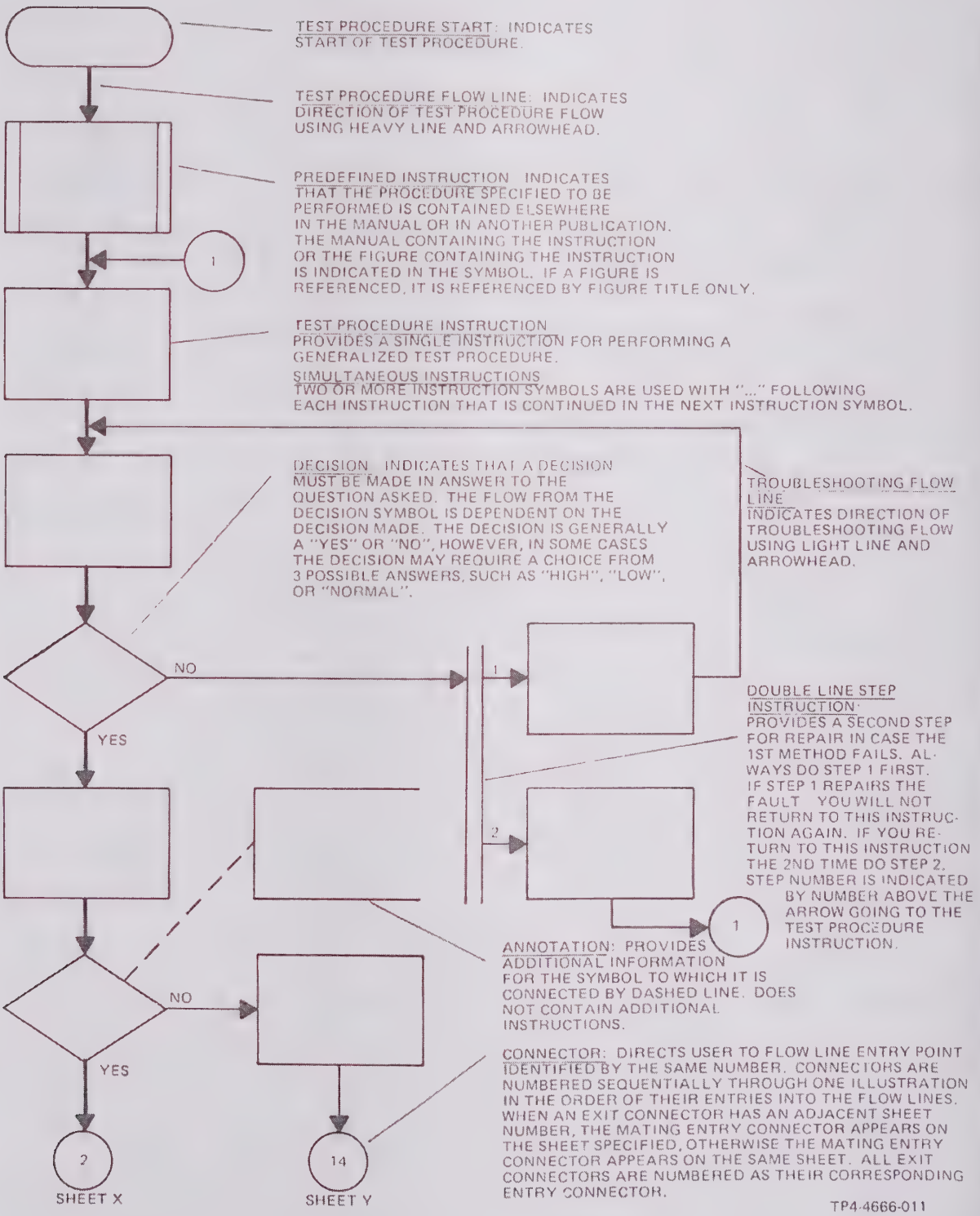

Flow-Chart Format
Figure 20

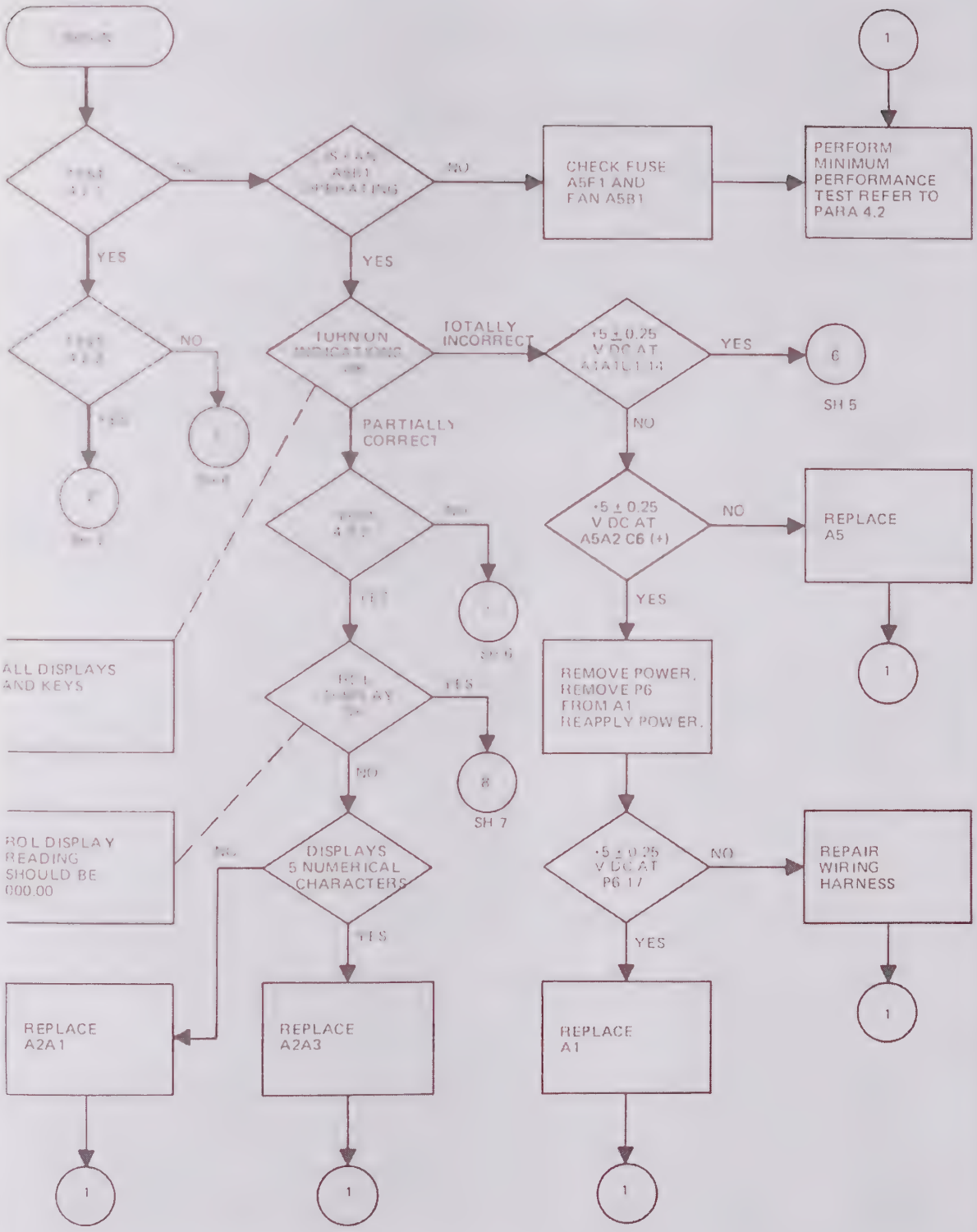

Minimum Performance Test, Troubleshooting Procedures
Figure 21 (Sheet 1 of 10)

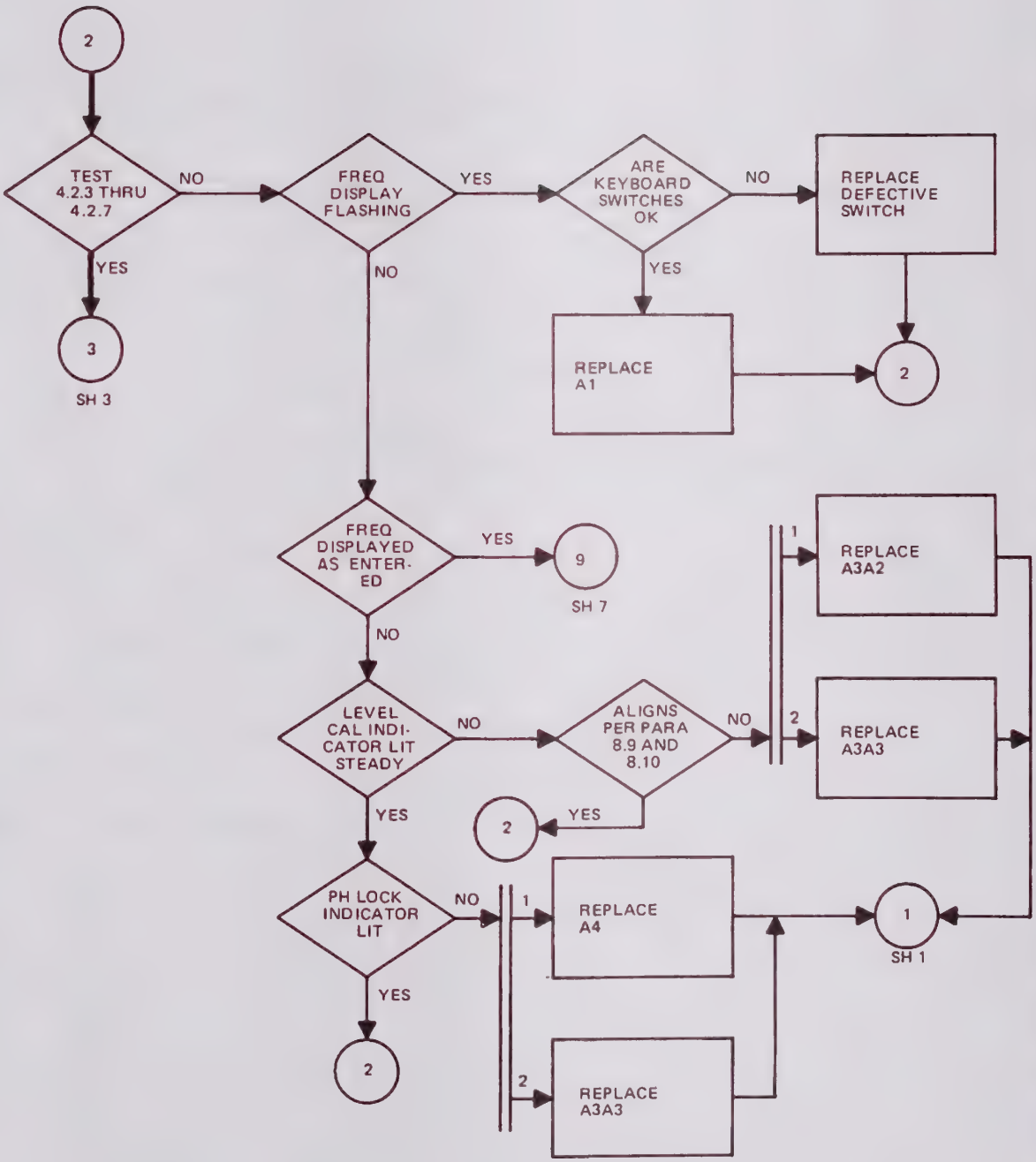

Minimum Performance Test, Troubleshooting Procedures
Figure 21 (Sheet 2)

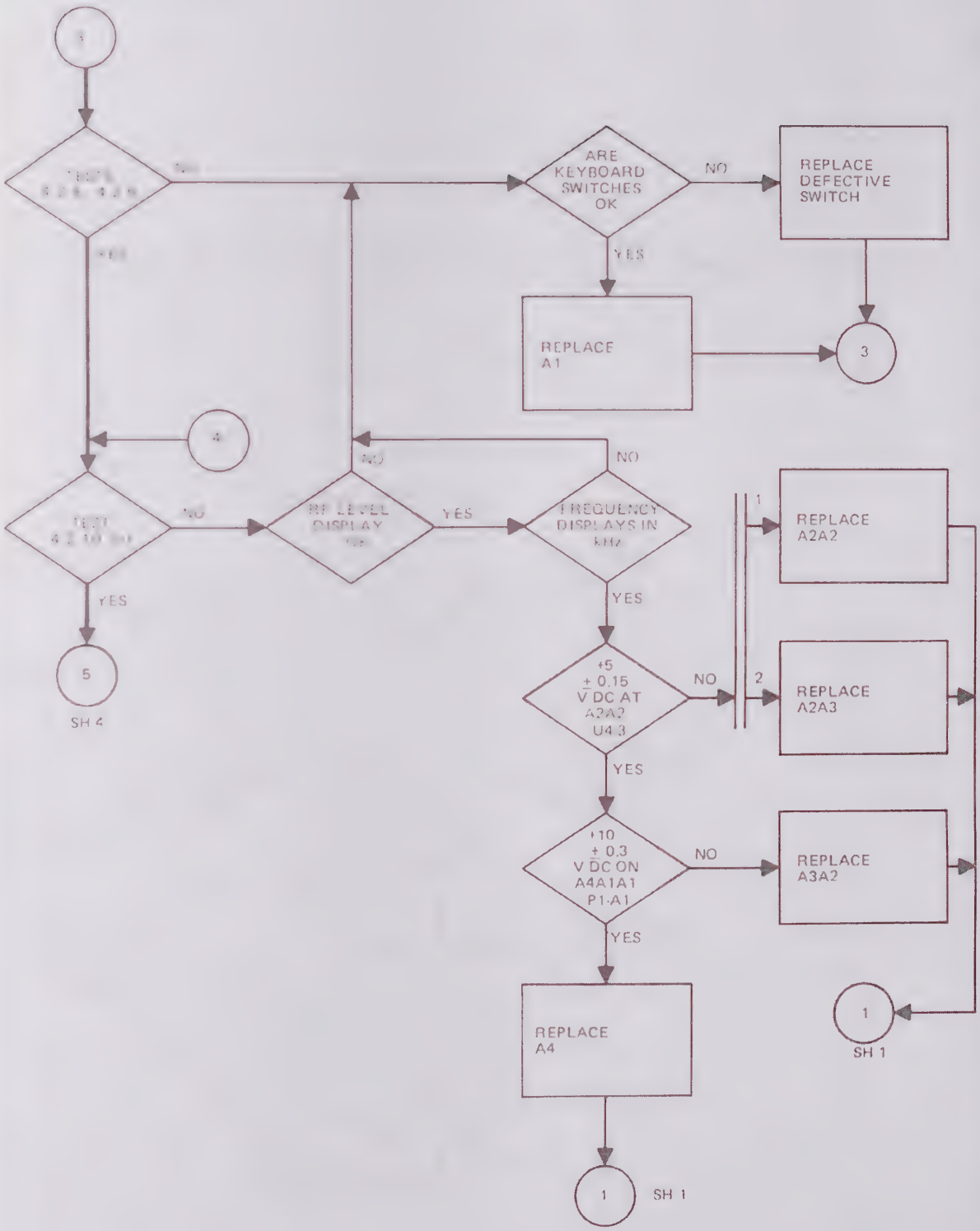

Minimum Performance Test, Troubleshooting Procedures
Figure 21 (Sheet 3)

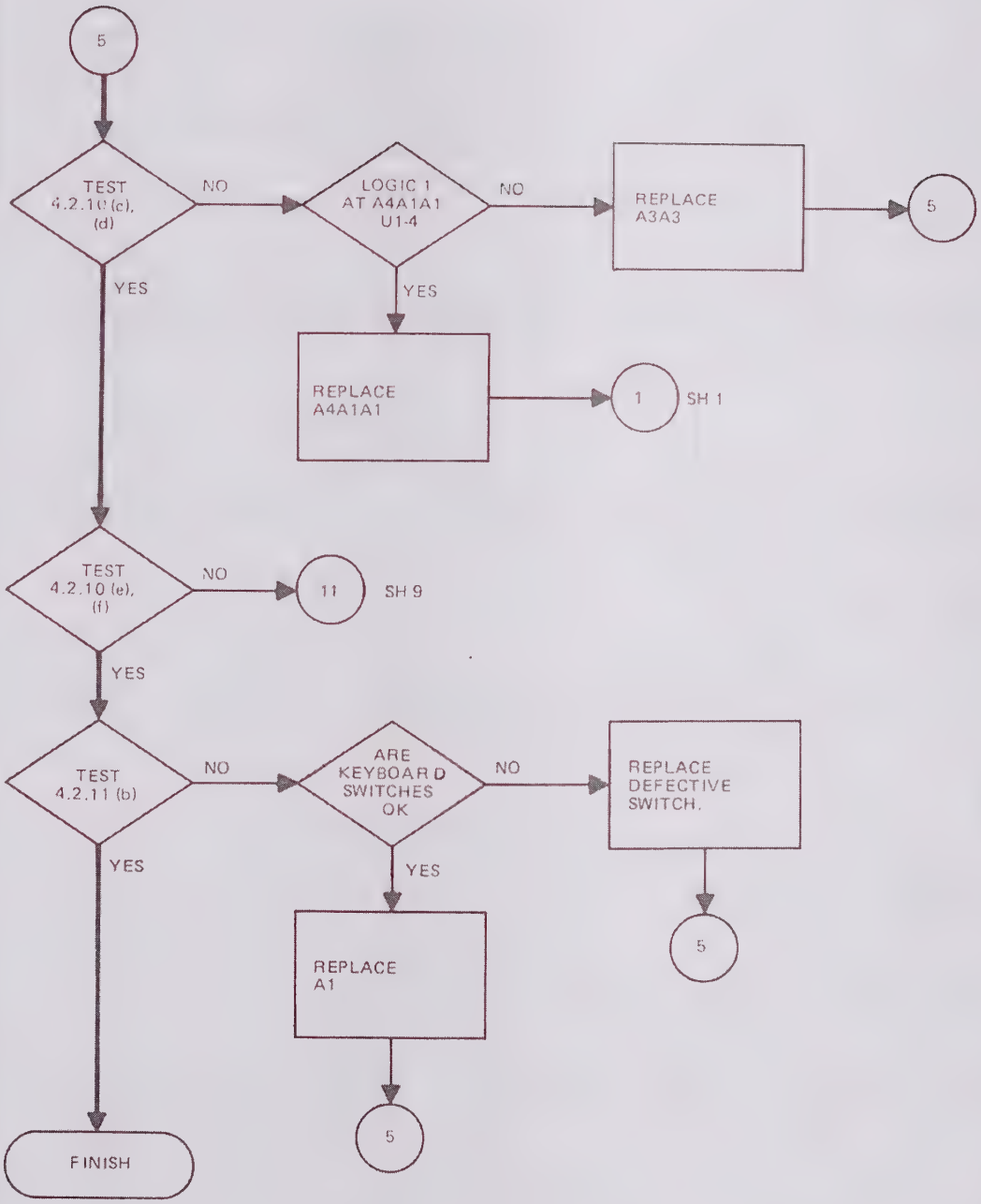

Minimum Performance Test, Troubleshooting Procedures
Figure 21 (Sheet 4)

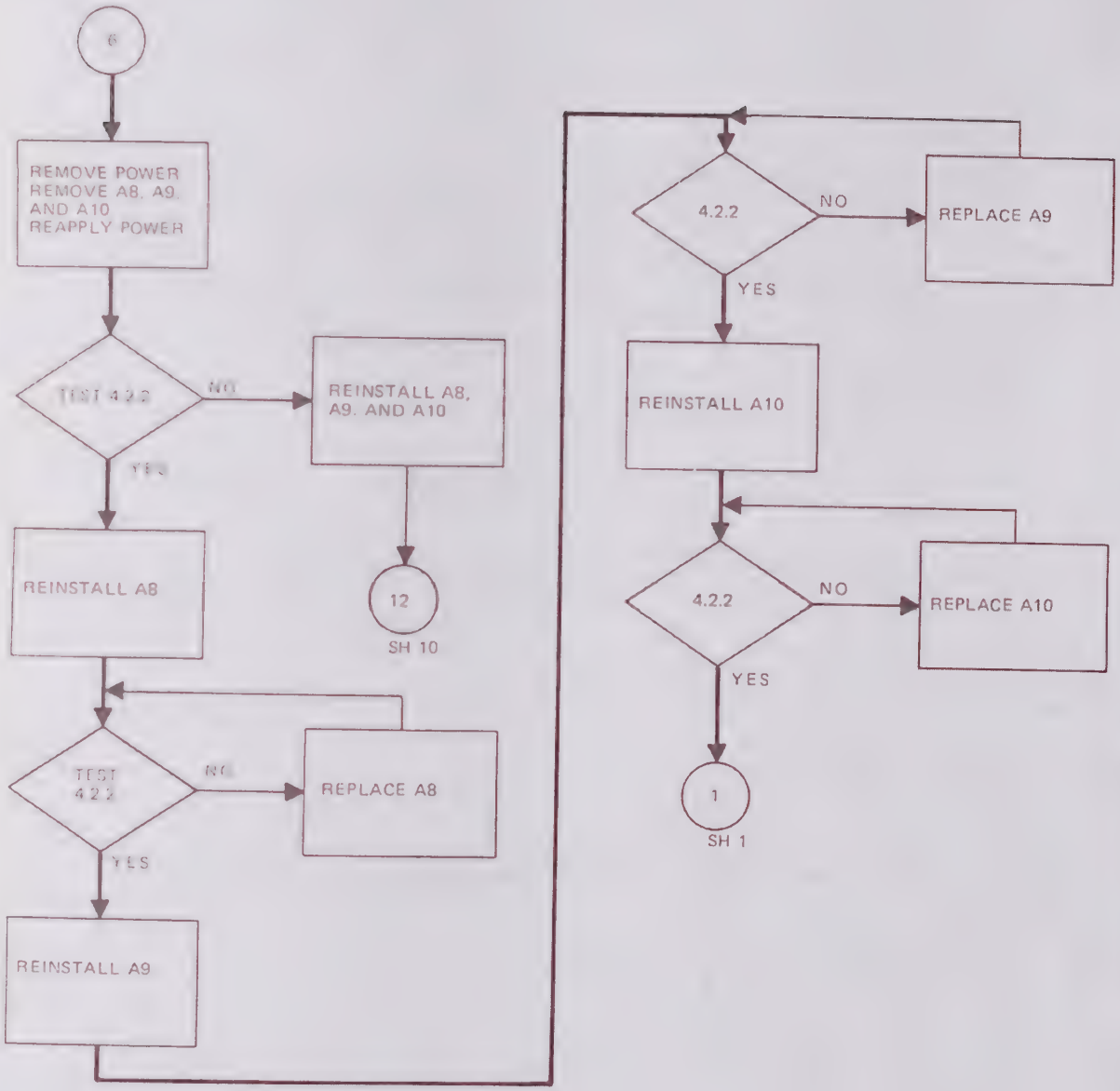

Minimum Performance Test, Troubleshooting Procedures
Figure 21 (Sheet 5)

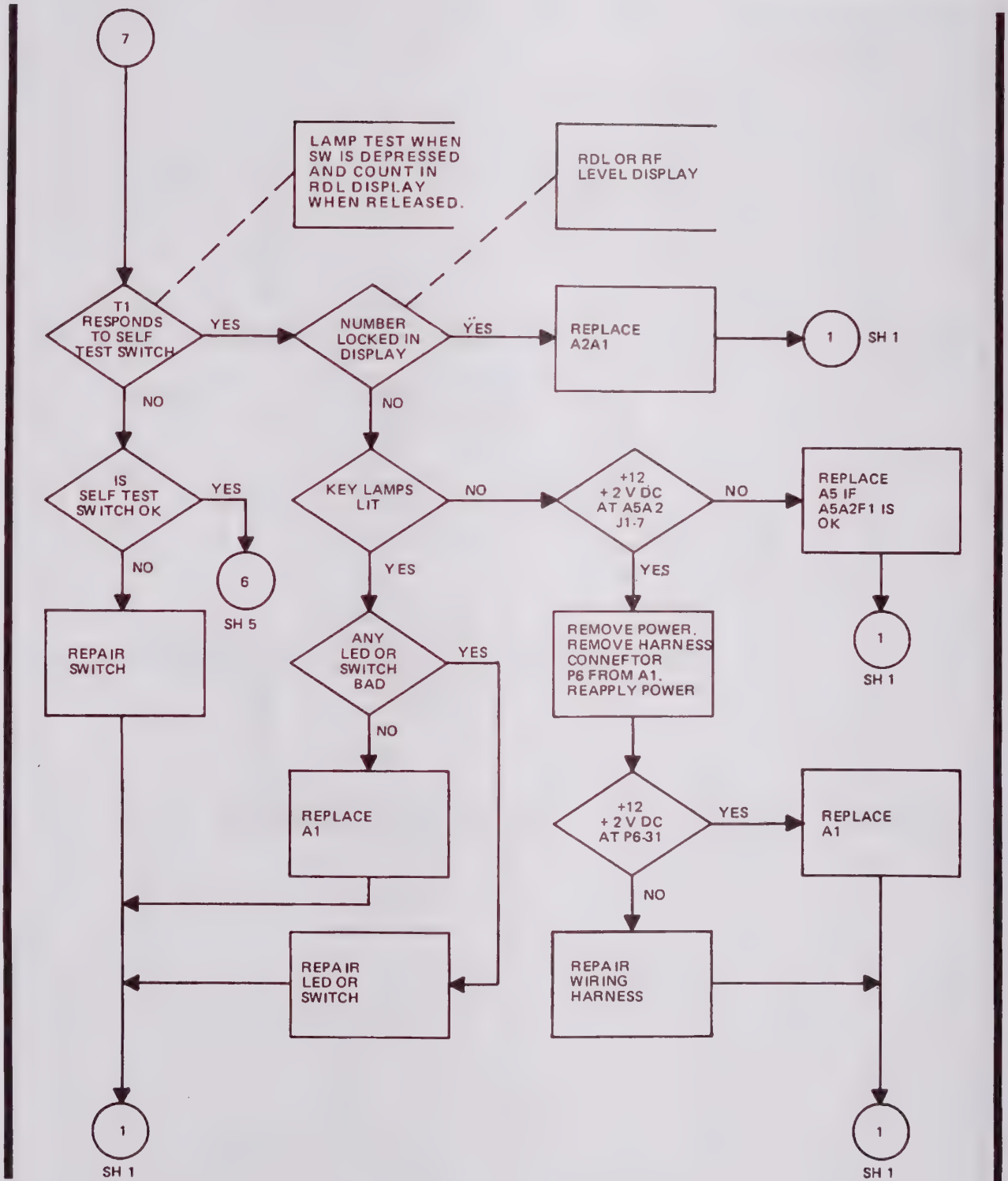

Minimum Performance Test, Troubleshooting Procedures
Figure 21 (Sheet 6)

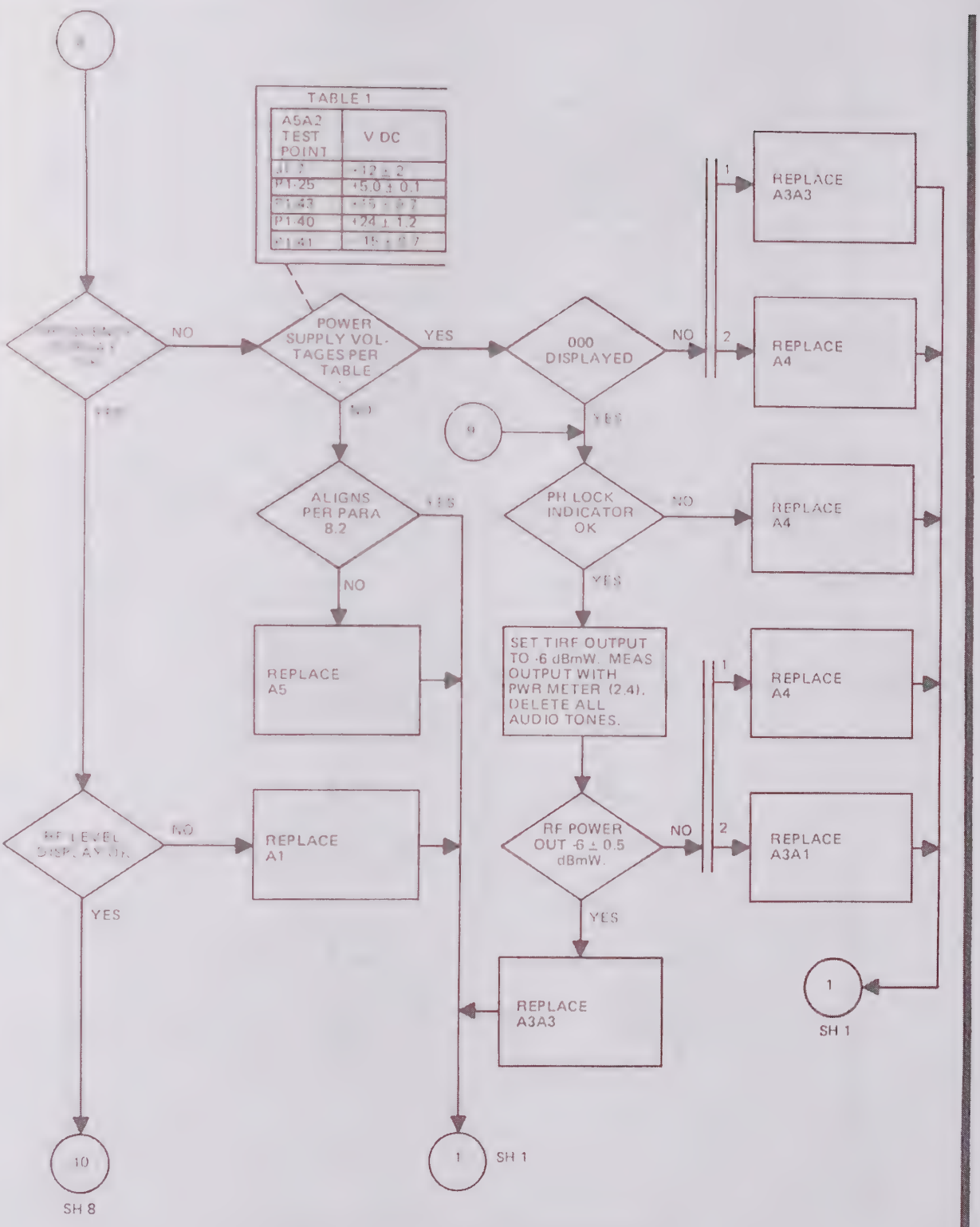

Minimum Performance Test, Troubleshooting Procedures
Figure 21 (Sheet 7)

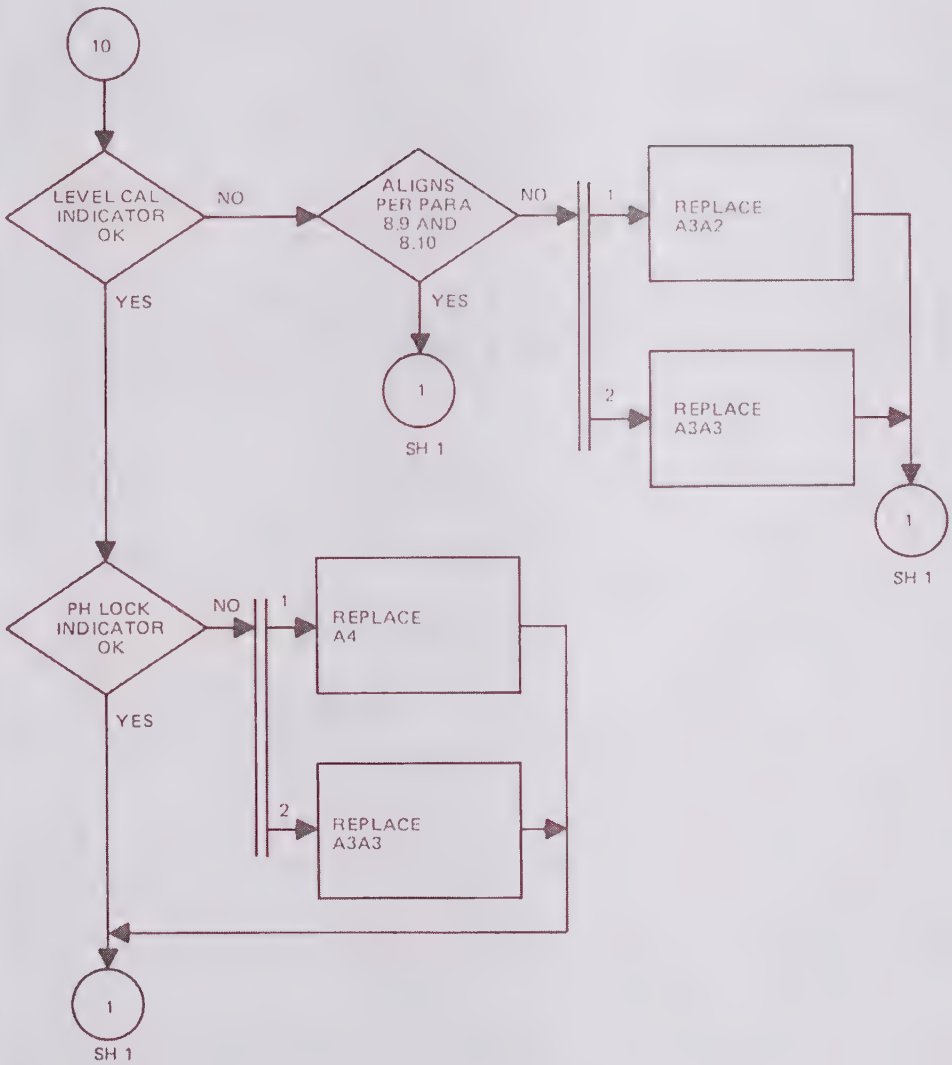

Minimum Performance Test, Troubleshooting Procedures
Figure 21 (Sheet 8)

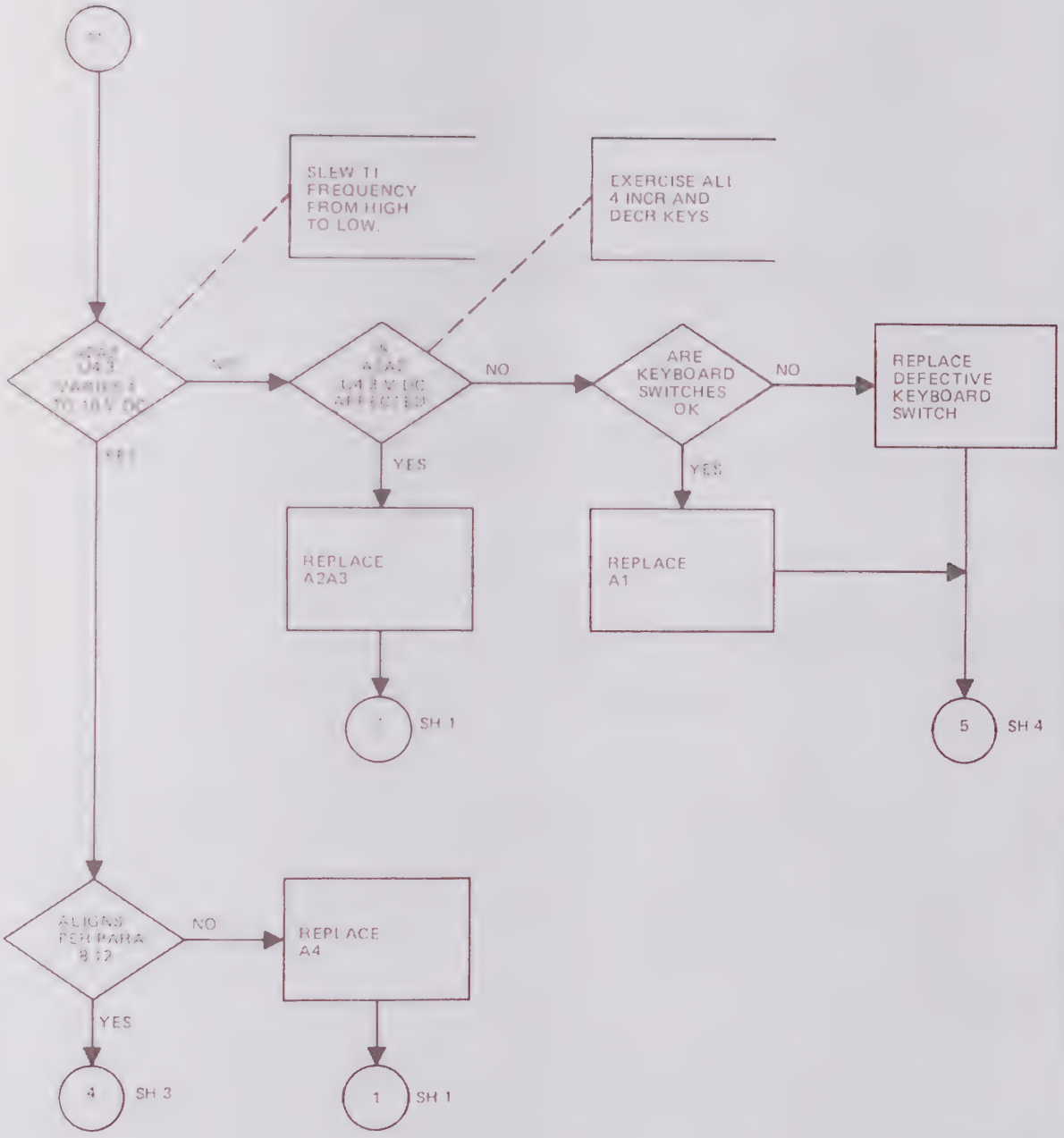

Minimum Performance Test, Troubleshooting Procedures
Figure 21 (Sheet 9)

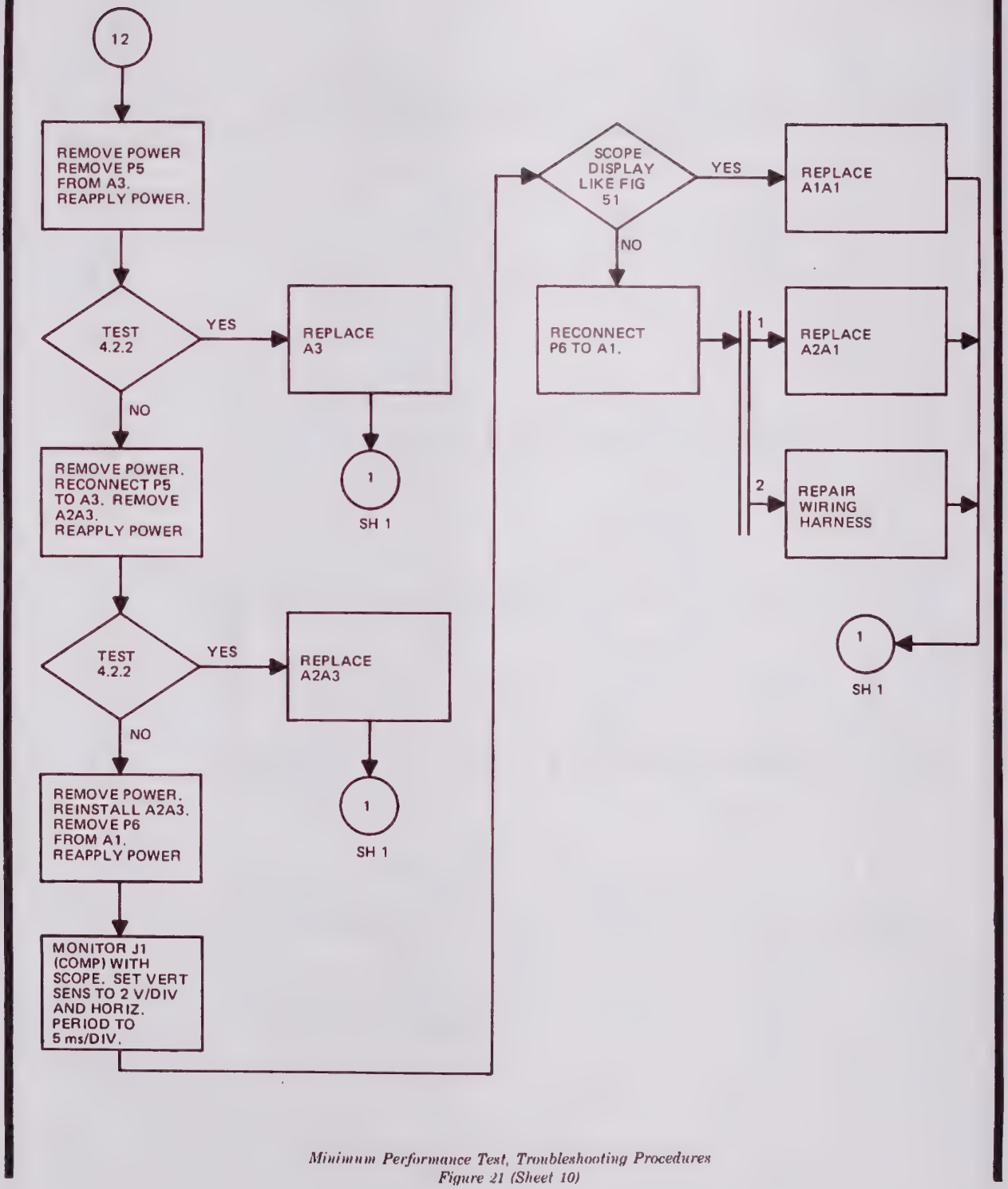

Minimum Performance Test, Troubleshooting Procedures
Figure 21 (Sheet 10)

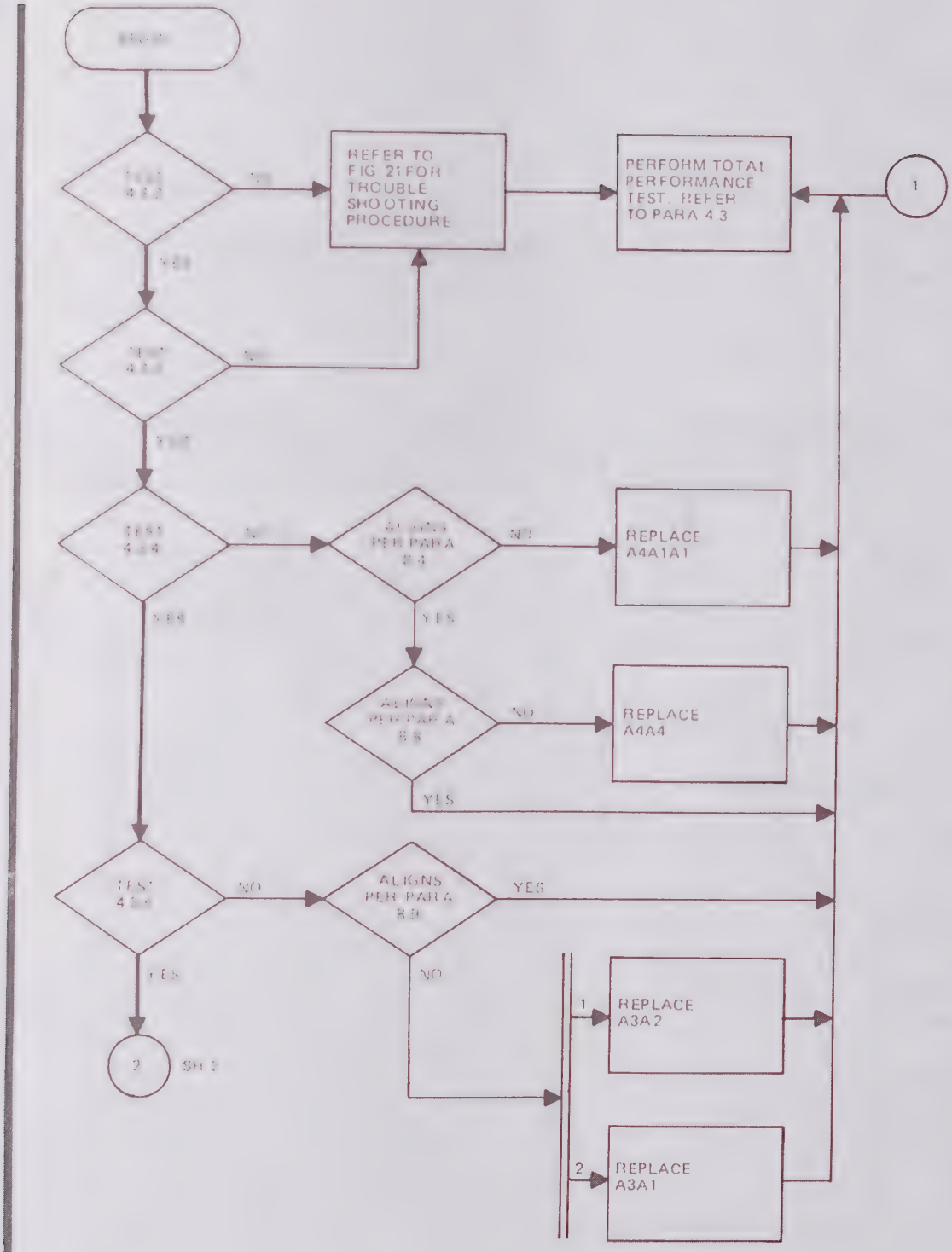

Total Performance Test, Troubleshooting Procedures
Figure 22 (Sheet 1 of 9)

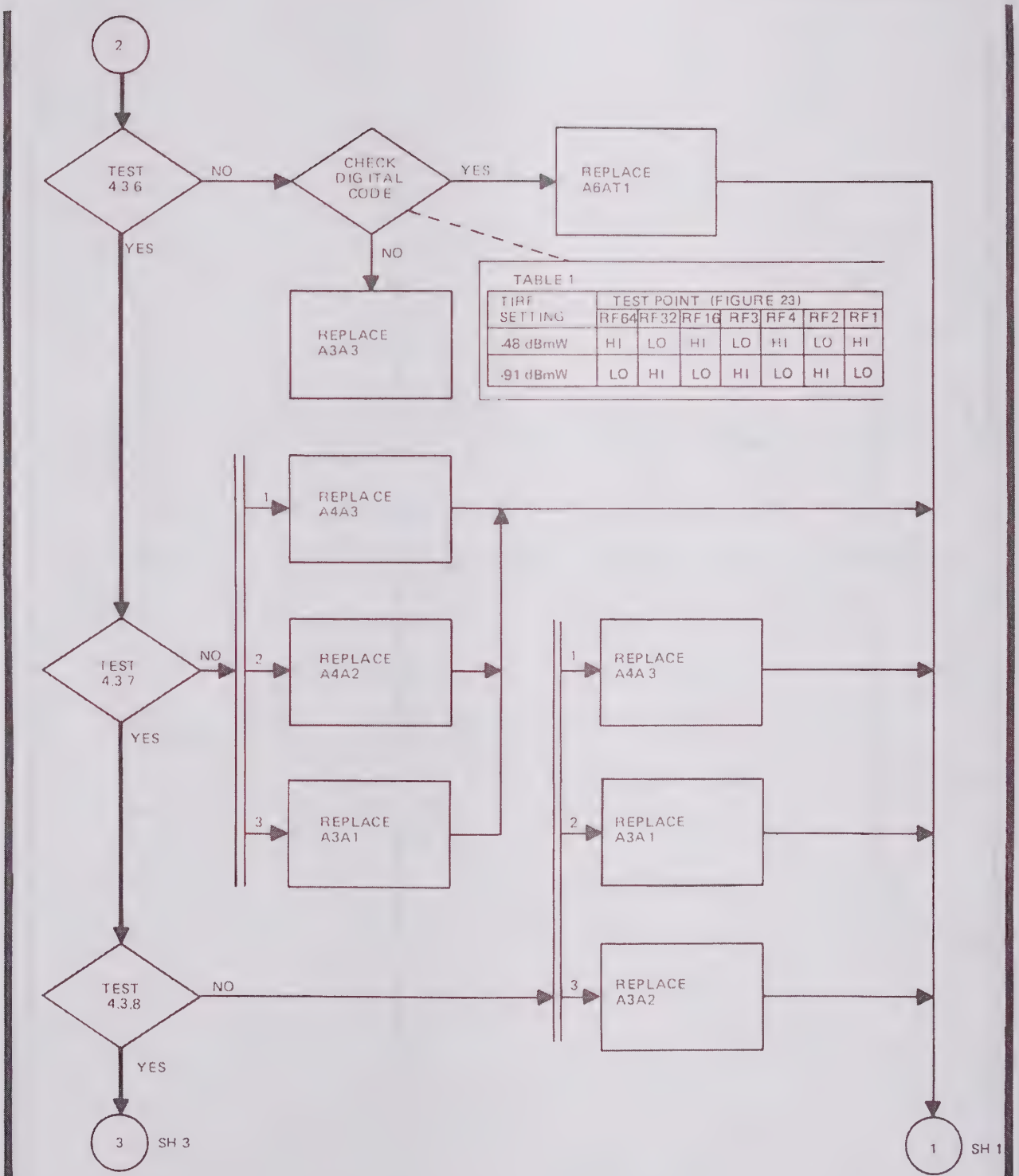

Total Performance Test, Troubleshooting Procedures
Figure 22 (Sheet 2)

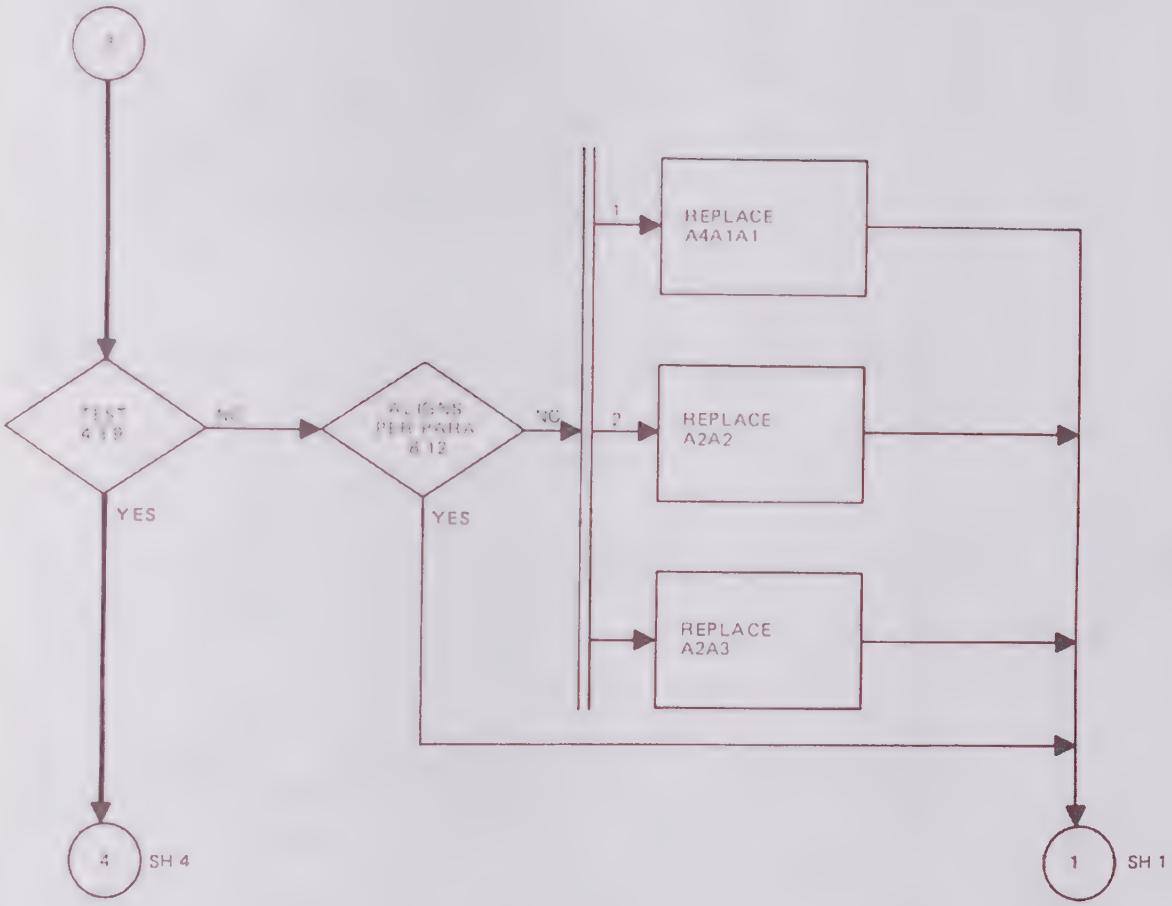

Total Performance Test, Troubleshooting Procedures
Figure 22 (Sheet 3)

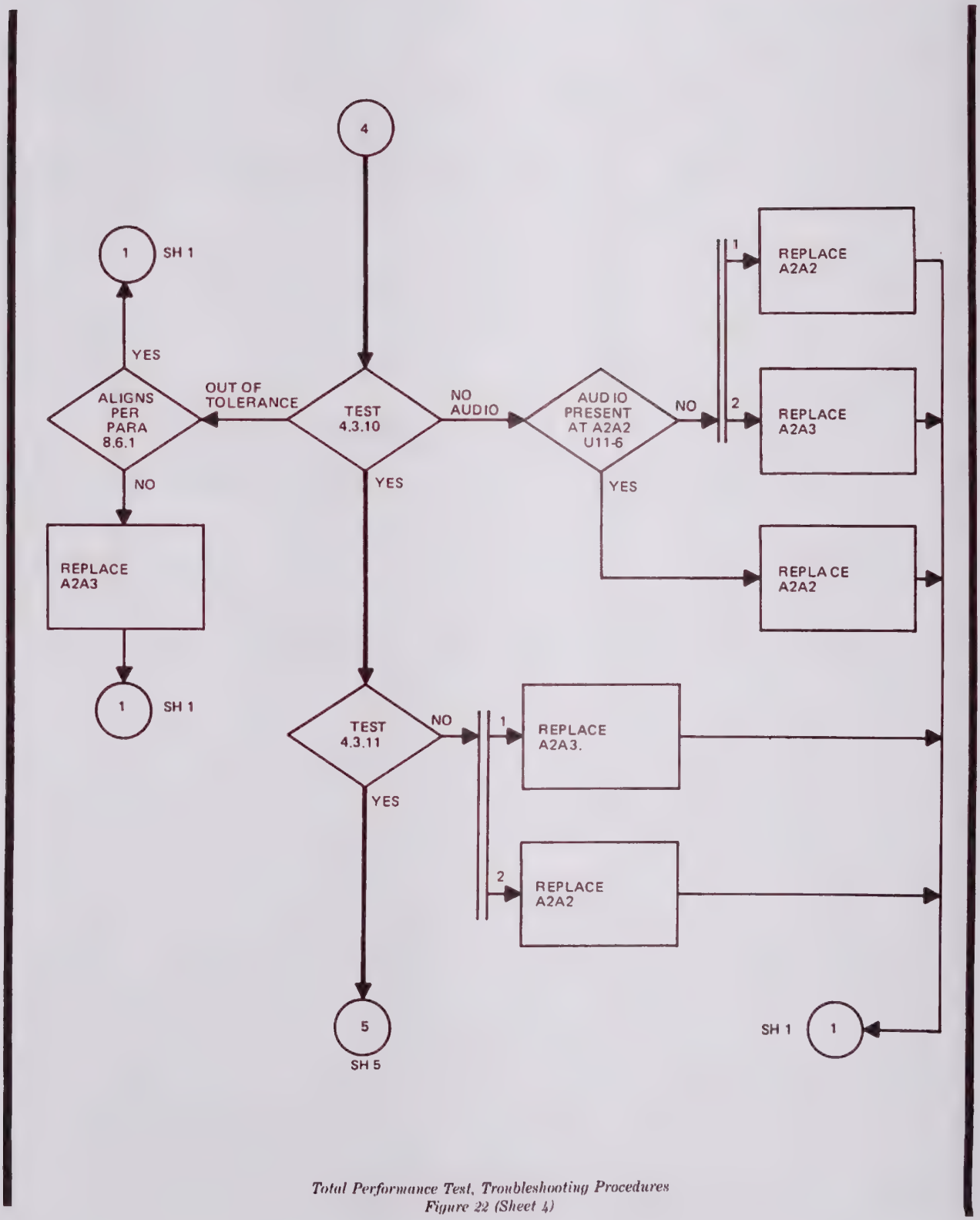

Total Performance Test, Troubleshooting Procedures
Figure 22 (Sheet 4)

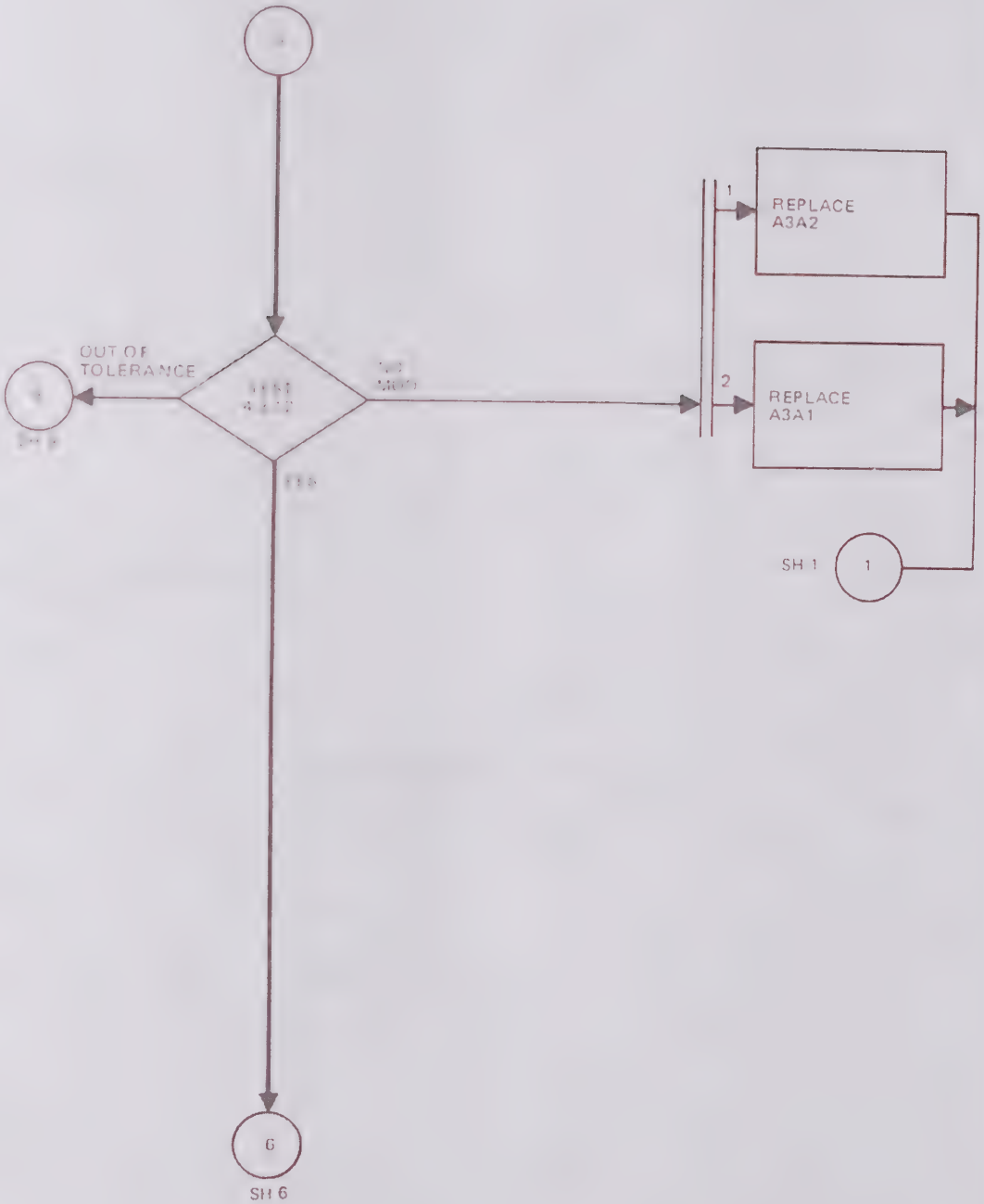

Total Performance Test, Troubleshooting Procedures
Figure 22 (Sheet 5)

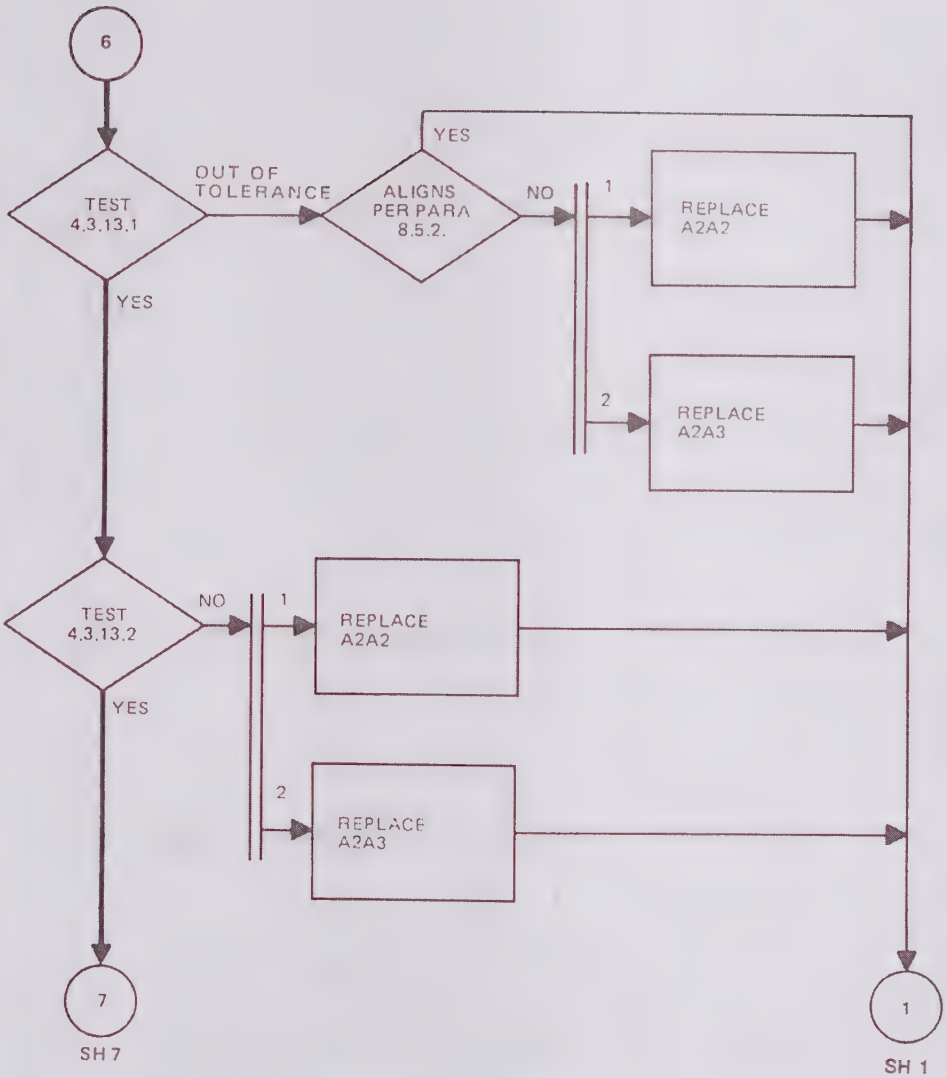

Total Performance Test, Troubleshooting Procedures
Figure 22 (Sheet 6)

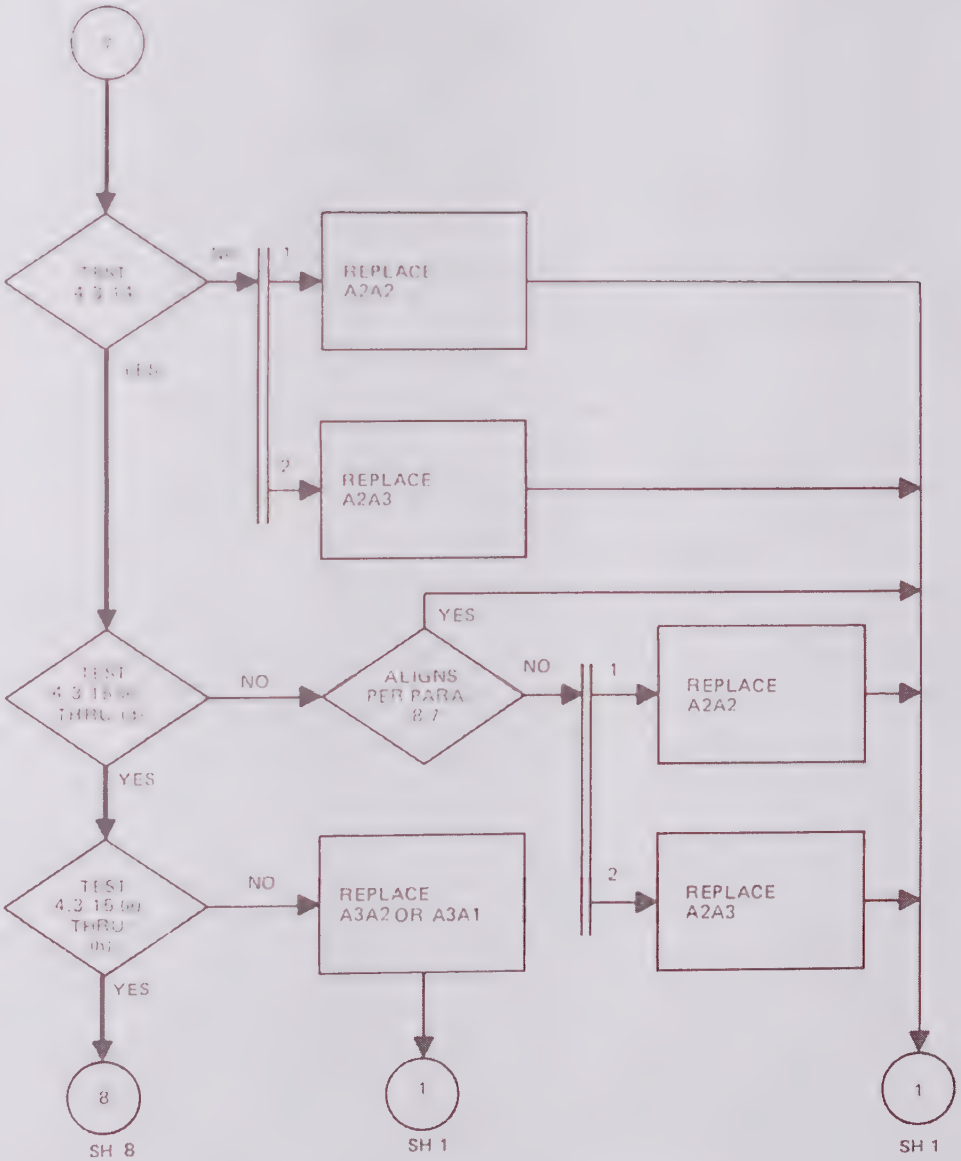

Total Performance Test, Troubleshooting Procedures
Figure 22 (Sheet 7)

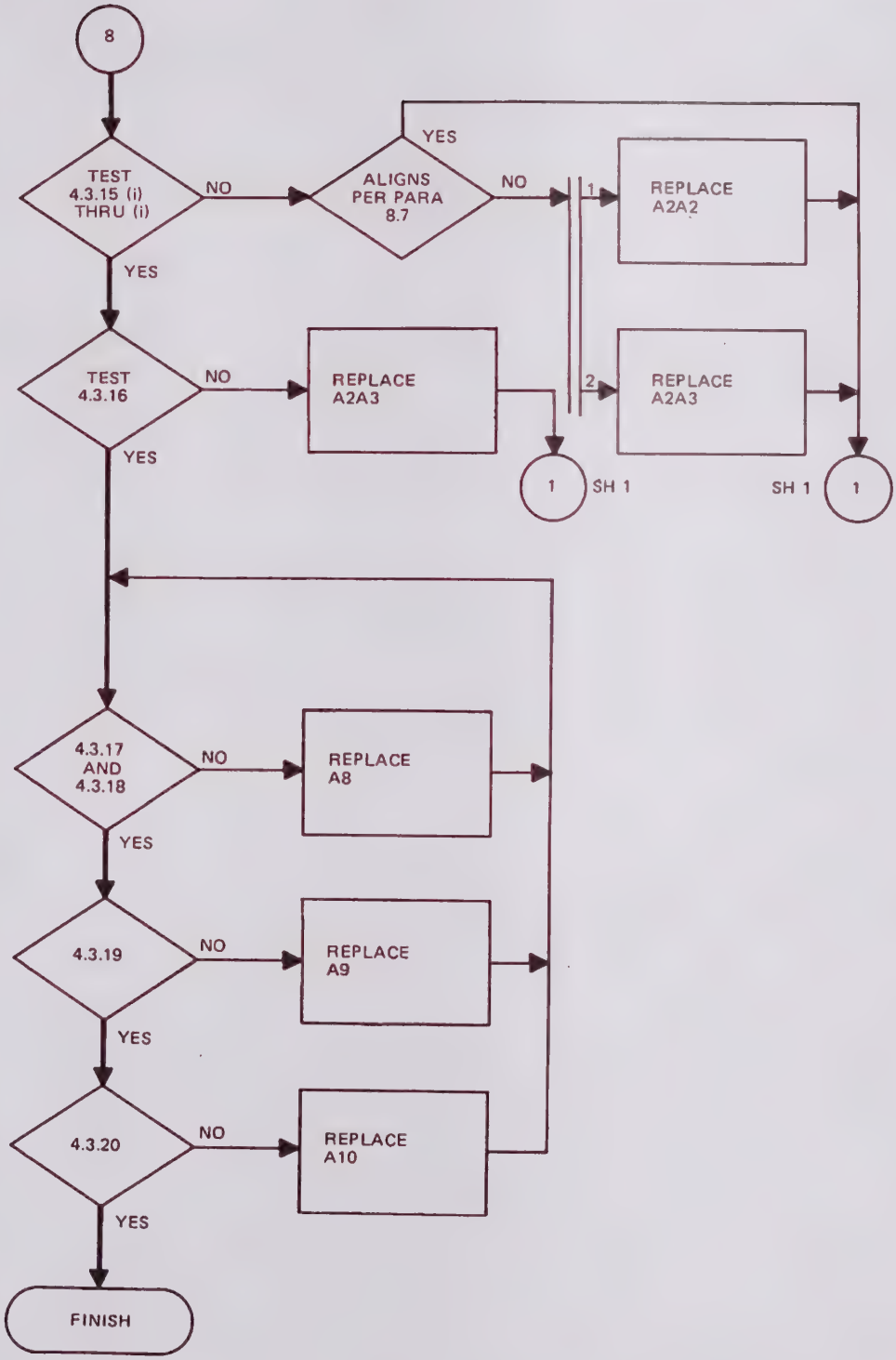

Total Performance Test, Troubleshooting Procedures
Figure 22 (Sheet 8)

Tektronix 523 0768885

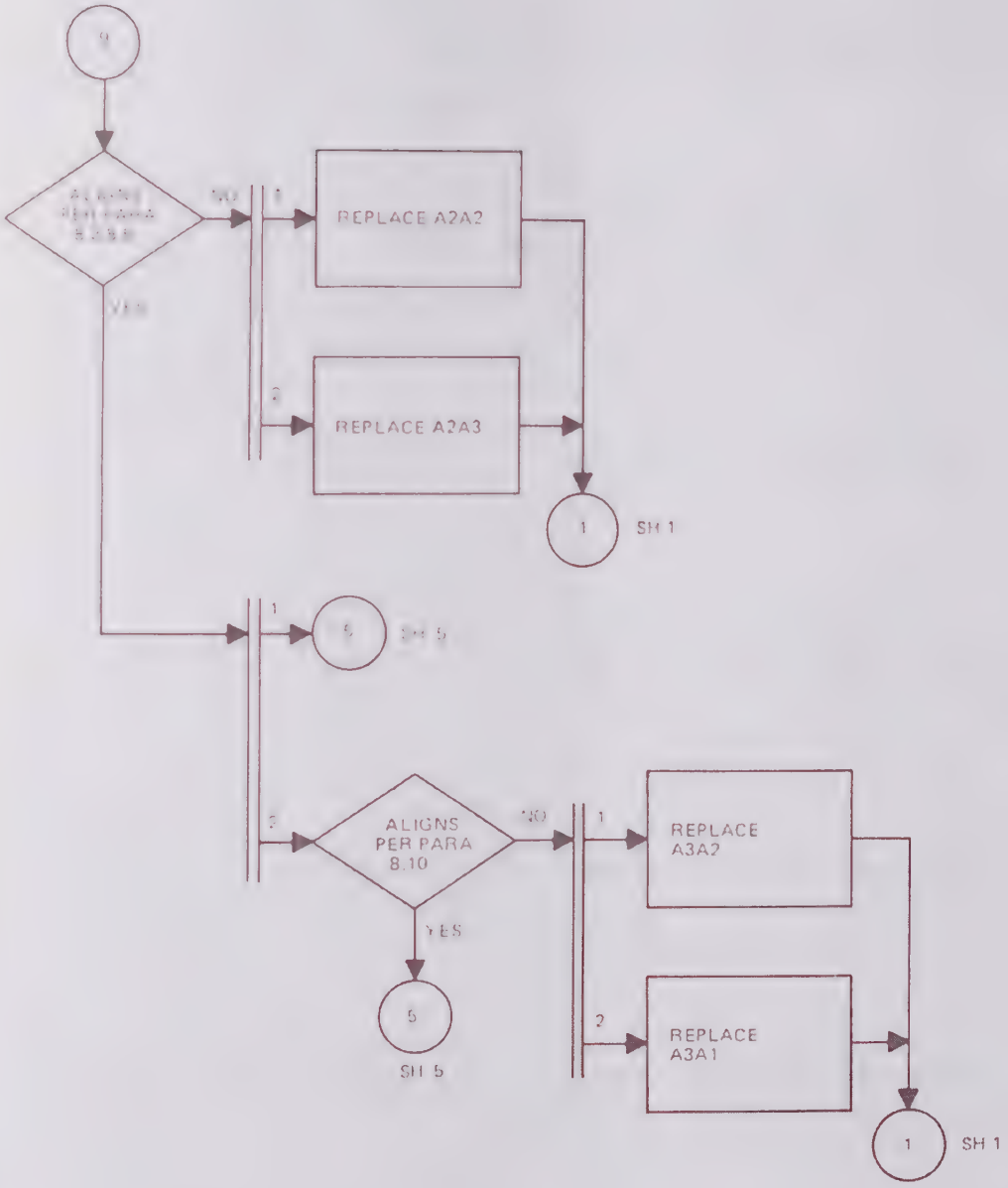

Total Performance Test, Troubleshooting Procedures
Figure 22 (Sheet 9)

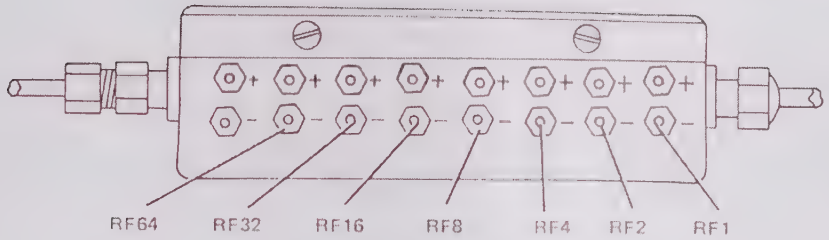

Attenuator A6AT1, Test-Point Location
Figure 23

Before replacing any subassemblies in the TI, perform the following:

a. Ensure all wiring harness connectors are securely mated with the modules.
b. Verify supply voltages are present on suspected failed modules; no supply voltage may indicate fault in wiring harness.

Unless a specific instruction is given in the troubleshooting procedure after replacing a subassembly, the following alignment procedures (paragraph 8) must be performed before restarting the troubleshooting procedures.

ASSEMBLY REPLACED	ALIGNMENT PARAGRAPHS TO BE PERFORMED
A2A2	8.3, 8.5, 8.7
A2A3	8.3, 8.5, 8.6, 8.7
A3A1	8.9, 8.10
A3A2	8.9, 8.10
A4	8.4, 8.8, 8.11, 8.12
A5	8.2

Caution

Do not remove or replace any of the circuit cards or modules in the TI while power is applied. To prevent injury to personnel and the TI, always set the TI POWER switch to off before removing or replacing modules or circuit cards.

5.4 Functional Level Troubleshooting

The troubleshooting procedures given in the following paragraphs provide fault isolation to the functional level on a circuit card.

The following criteria must be used when performing these troubleshooting procedures unless specified otherwise.

a. Logic 1 voltages must be between +2.4 and +5.5 V dc.
b. Logic 0 voltages must be less than +0.4 V dc.
c. Clock and data waveform frequencies and periods must be within ±10 percent of the stated value.
d. All measurements are made with respect to chassis ground.

Caution

Do not remove or replace any of the circuit cards or modules in the TI while power is applied. To prevent injury to personnel and the TI, always set the TI POWER switch to off before removing or replacing circuit cards.

5.4.1 Front Panel Assembly A1 Troubleshooting

Front panel assembly A1 is controlled by the microprocessor via the parallel address and data bus. Most signals on the assembly are asynchronous; therefore, troubleshooting is supplied in the form of a malfunction table in table 2. Component location is shown in figure 24.

Table 2. Front Panel Assembly A1, Troubleshooting Procedures.

MALFUNCTION	PROCEDURE
TI does not respond to a key.	Turn off power. Disconnect front panel assembly from TI. Connect ohmmeter (with less than 2-mA test current) to two pads corresponding to malfunctioning key switch. With key depressed, ohmmeter reading must be less than 2 Ω. With key released, ohmmeter reading must be greater than 100 kΩ.

Table 2. Front Panel Assembly A1, Troubleshooting Procedures (Cont).

MALFUNCTION	PROCEDURE
TI does not respond to a row or column of keys as shown in key matrix on schematic diagram.	Row: Check buffers U66 and U67 and pullup resistors on inputs. Column: Check U62 and U64.
TI does not respond to any keys.	Check U47, U48A, and U1C.
One key lamp does not light.	Check lamp and latch, and inverter feeding lamp.
400 Hz, 90 Hz, 30 Hz VAR, 1020/AUX, and 9960 FM key lamps do not light.	Check U56, U57, and U47.
1300 Hz, 3000 Hz, 9960 Hz, and 150 Hz key lamps do not light.	Check U58, U59, and U47.
% MOD, RDL/DDM, VAR FREQ, STO, RCL, and f key lamps do not light.	Check U60, U61, and U47.
RF FREQ and ΔF key lamps do not light.	Check U65, U68, and U47.
One bad 7-segment display.	Check latch, decoder/driver, and resistors feeding display. Latch and decoder logic outputs are shown below.

NUMBER DISPLAYED	LATCH OUTPUT				DECODER OUTPUT						
	Q1	Q2	Q3	Q6	a	b	c	d	e	f	g
0	0	0	0	0	0	0	0	0	0	0	1
1	0	0	0	1	1	0	0	1	1	1	1
2	0	0	1	0	0	0	1	0	0	1	0
3	0	0	1	1	0	0	0	0	1	1	0
4	0	1	0	0	1	0	0	1	1	0	0
5	0	1	0	1	0	1	0	0	1	0	0
6	0	1	1	0	1	1	0	0	0	0	0
7	0	1	1	1	0	0	0	1	1	1	1
8	1	0	0	0	0	0	0	0	0	0	0
9	1	0	0	1	0	0	0	1	1	0	0

Bad discrete LED indicator.	Check latch and inverter feeding indicator. Logic 0 will light indicator.
TI does not display any data correctly.	Check U1, U28, and U63.
TI does not bar all displays.	Check inverter connected to segment g of display.
TI does not bar any display.	Check U26 and buffers on output.
DS1 thru DS5 blank when rf is shut off.	Check U55C and U32E.
DS6 thru DS11 do not blank when rf is shut off.	Check U55B and U36F.
DS12 thru DS14 do not display OFF when rf is shut off.	Check U27A, U26, U55A, U21D, and inverters connected to display input lines.
DS1 thru DS8 do not display correctly.	Check U5 and U28C.
DS9 thru DS14 do not display correctly.	Check U19 and U28B.

Front Panel Assembly A1, Component Location
Figure 24 (Sheet 1 of 2)

FRONT PANEL ASSY A1, REAR VIEW

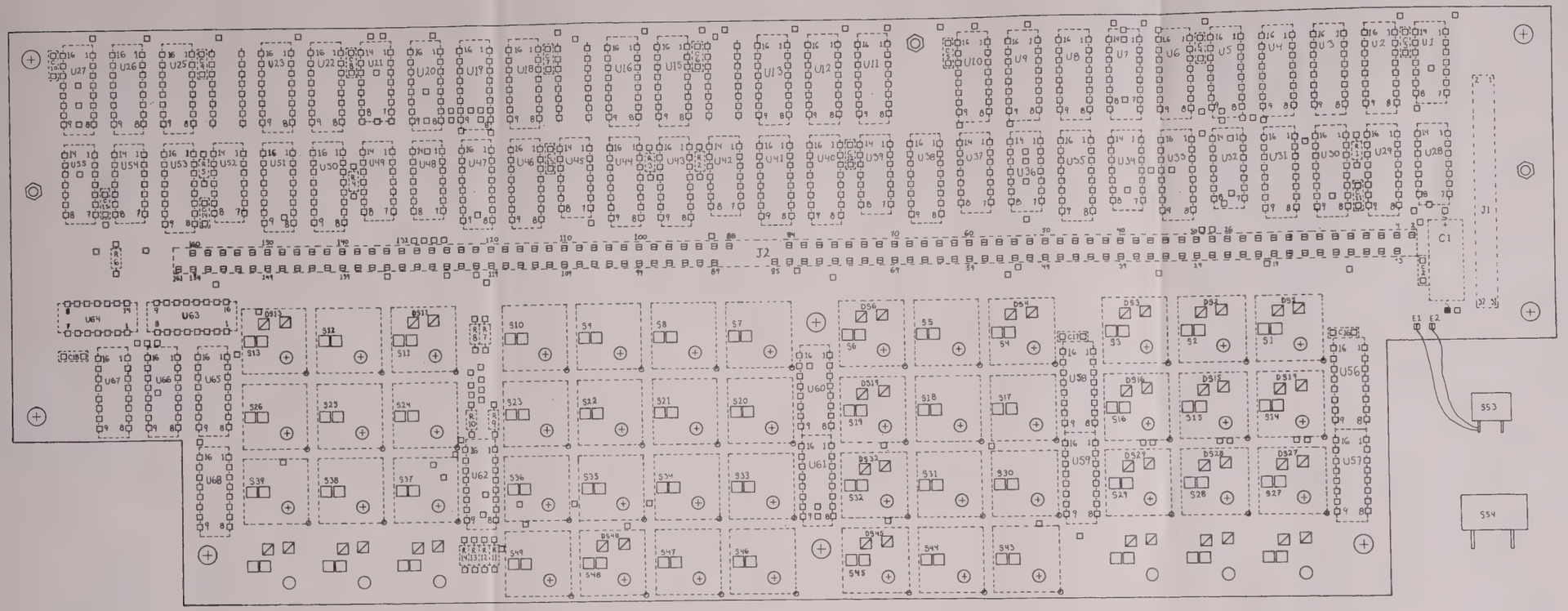

NOTE:
1. ■ IS A GROUND PAD.

TP5-5199-015

Front Panel Assembly A1, Component Location
Figure 24 (Sheet 2)

Remove A1 from the TI as described in disassembly paragraph 6.1.4, steps b and c. Do not remove wiring harness connector from A1. Position A1 so that the circuit pads on the back side of A1A1 are accessible.

5.4.2 Controller/Audio Assembly A2 Troubleshooting

5.4.2.1 CPU Assembly A2A1 Troubleshooting

a. Connect oscilloscope (2.8) to the following test points and verify clock frequencies. Refer to figure 25 for component locations.

TEST POINT	FREQUENCY
U5-4	16 MHz
U4-6	2 MHz
U5-2	2 MHz
U4-7	1 MHz
U3-9	500 kHz
U1-6	244 Hz (4-ms period)

b. Press and release SELF TEST switch. The RDL/DDM/MOD display will count, which is a check of the program output from the programmed memory chips. If the output from a ROM is incorrect, the RDL/DDM/MOD display indicates the number of the malfunctioning ROM and the MODE display SELF TEST indicator lights. The number of the memory and the SELF TEST indicator flashes on and off indicating the malfunction. Listed below, is the integrated circuit number and corresponding ROM.

INTEGRATED CIRCUIT	ROM NUMBER
U21	1
U22	2
U23	3
U13	4
U14	5
U15	6
U7	7

If the output from a RAM is incorrect, the RF LEVEL display indicates the number of the malfunctioning RAM. Listed below are the integrated circuit number and corresponding RAM.

INTEGRATED CIRCUIT	RAM NUMBER
U25 and U26	1
U19 and U20	2
U17 and U18	3

c. Connect oscilloscope to following points and check for indicated results.

TEST POINT	RESULTS	ABNORMAL INDICATION
U35-17	Logic 1	Check U40
U35-25	Logic 1	Check U40
U35-24	Logic 1	Check U40
U35-26	Logic 1	Check U44
U35-16	244-Hz waveform	Check U3
U35-27	Pulsating waveform	Check U35

5.4.2.2 Analog Board A2A2 Troubleshooting

Table 3 provides the troubleshooting procedures for analog board A2A2. Refer to figure 26 for component locations. If a malfunction occurs, the IF INDICATION IS ABNORMAL column in table 3 gives the components to check or replace. Before replacing any components on the circuit card, check the printed circuit and circuit board connector for damage.

5.4.2.3 TDM Board A2A3 Troubleshooting

a. Connect oscilloscope (2.8) to the following test points and verify clock frequencies. Refer to figure 29 for component locations.

TEST POINT	FREQUENCY
1. J1-25	16 MHz
2. U76-6	16 MHz
3. J2-58	8 MHz
4. U75-9	4 MHz
5. U82-14	2 MHz
6. U83-2	2 MHz
7. U83-3	2 MHz
8. U83-7	1 MHz
9. U83-6	1 MHz
10. U83-10	500 kHz
11. U83-11	500 kHz
12. U83-15	250 kHz
13. U83-14	250 kHz

TP5-5584-013

NOTE:

CPU A2A1, Component Location
Figure 25

Table 3. Analog Board A2A2, Troubleshooting Procedures.

TEST	PROCEDURE	DESIRED RESULTS	IF INDICATION IS ABNORMAL
1	a. Connect dvm (2,2) to VR1 cathode.	a. +5.3 to +5.9 V dc.	a. Check VR1, L4, and associated circuitry.
	b. Connect dvm to VR2 anode.	b. -5.3 to -5.9 V dc.	b. Check VR2, L5, and associated circuitry.
	c. Connect dvm to U1-6.	c. +11.98 to +12.02 V dc.	c. Check U1, VR3, and associated circuitry. Perform paragraph 8.3 alignment.
2	Set TI to 108.00 MHz, standard VOR audio. Press ΔF key.		
	a. Connect oscilloscope (scope) (2,8) to P1-7, P1-8, P1-9, and P1-10.	a. Waveform similar to figure 27.	a. Check A2A3.
	b. Connect scope to U22-10.	b. Waveform similar to figure 27.	b. Check U22.
	c. Connect scope to U18-10.	c. Waveform similar to figure 27.	c. Check U18.
	d. Connect scope to U10-10.	d. Waveform similar to figure 27.	d. Check U10.
	e. Connect scope to U5-10.	e. Waveform similar to figure 27.	e. Check U5.
	f. Connect scope to P1-4.	f. +8.10 to +8.40 V dc.	f. Check U21 and filters R57, R61, C37, C38.
	g. Connect dvm to P1-1.	g. +8.10 to +8.40 V dc.	g. Check U17 and filters R60, R64, C43, C44.
	h. Connect dvm to P1-2.	h. +8.10 to +8.40 V dc.	h. Check U9 and filters R59, R63, C41, C42.
	i. Remove power from TI. Disconnect wiring harness connector from P2. Reapply power to TI. Connect dvm to P2-1. Press ΔF key.	i. +4.85 to +5.15 V dc.	i. Check U4 and filters R58, R62, C39, C40.
	j. Remove power from TI. Disconnect dvm from P2-1. Reconnect wiring harness connector to P2. Reapply power to TI.		
3	Set TI to 75.000-MHz, 400-Hz tone.		
	a. Connect scope to U11-6.	a. 400-Hz waveform.	a. Check U11.
	b. Connect scope to AUX connector on rear panel of TI.	b. 400-Hz waveform.	b. Check U6, R11, C4.
	c. Connect dvm to P1-30.	c. Logic 1.	c. Check A2A3.
(Cont)	d. Connect scope to U2-1.	d. 400-Hz waveform.	d. Check U2B, R10, and filters R110, R112, C3.

Table 3. Analog Board A2A2. Troubleshooting Procedures (Cont).

TEST	PROCEDURE	DESIRED RESULTS	IF INDICATION IS ABNORMAL
3 (Cont)	c. Connect scope to U15-6.	c. 400-Hz waveform.	c. Check U15.
	f. Connect scope to P2-4.	f. 400-Hz waveform.	f. Check U20 and filters L1, L2, L3, C19, C20, C21.
	g. Connect scope to COMP connector on rear panel of TI.	g. 400-Hz waveform.	g. Check U14.
4	Set TI to 110.10-MHz, 90-Hz tone only.		
	a. Connect scope to U7-6.	a. 90-Hz waveform.	a. Check U7.
	b. Connect dvm to P1-27.	b. Logic 1.	b. Check A2A3.
	c. Connect scope to U15-6.	c. 90-Hz waveform.	c. Check U3B, R4, and ILS BALANCE components.
5	Set TI to 108.00-MHz, 30-Hz VAR tone only.		
	a. Connect scope to U7-6.	a. 30-Hz waveform.	a. Check U7.
	b. Connect dvm to P1-32.	b. Logic 1.	b. Check A2A3.
	c. Connect scope to COMP connector on rear panel of TI.	c. 30-Hz waveform.	c. Check U2A, R8, R9, and associated circuitry.
6	Set TI to 108.00-MHz, 9960-Hz tone only (not 9960 FM).		
	a. Connect scope to P1-15.	a. 1-MHz square wave.	a. Check A2A3.
	b. Connect scope to U19-6.	b. 9960-Hz waveform similar to figure 28.	b. Check U19, U16, Q1, and associated circuitry.
	c. Connect scope to U16-6.	c. 9960-Hz waveform.	c. Check U19, U16, Q1, and associated circuitry.
	d. Connect dvm to P1-24.	d. Logic 1.	d. Check A2A3.
	e. Connect scope to COMP connector on rear panel of TI.	e. 9960-Hz waveform as in figure 28.	e. Check U3C, R6, and filters R33, R34, C16, C17.
7	Set TI to 110.10-MHz, 1020-Hz tone only. Connect scope to COMP connector on rear panel of TI.	1020-Hz waveform.	Check U3A, R5, and filters R39, R38, C15.
8	Perform paragraph 8.5 and 8.7 alignments.		

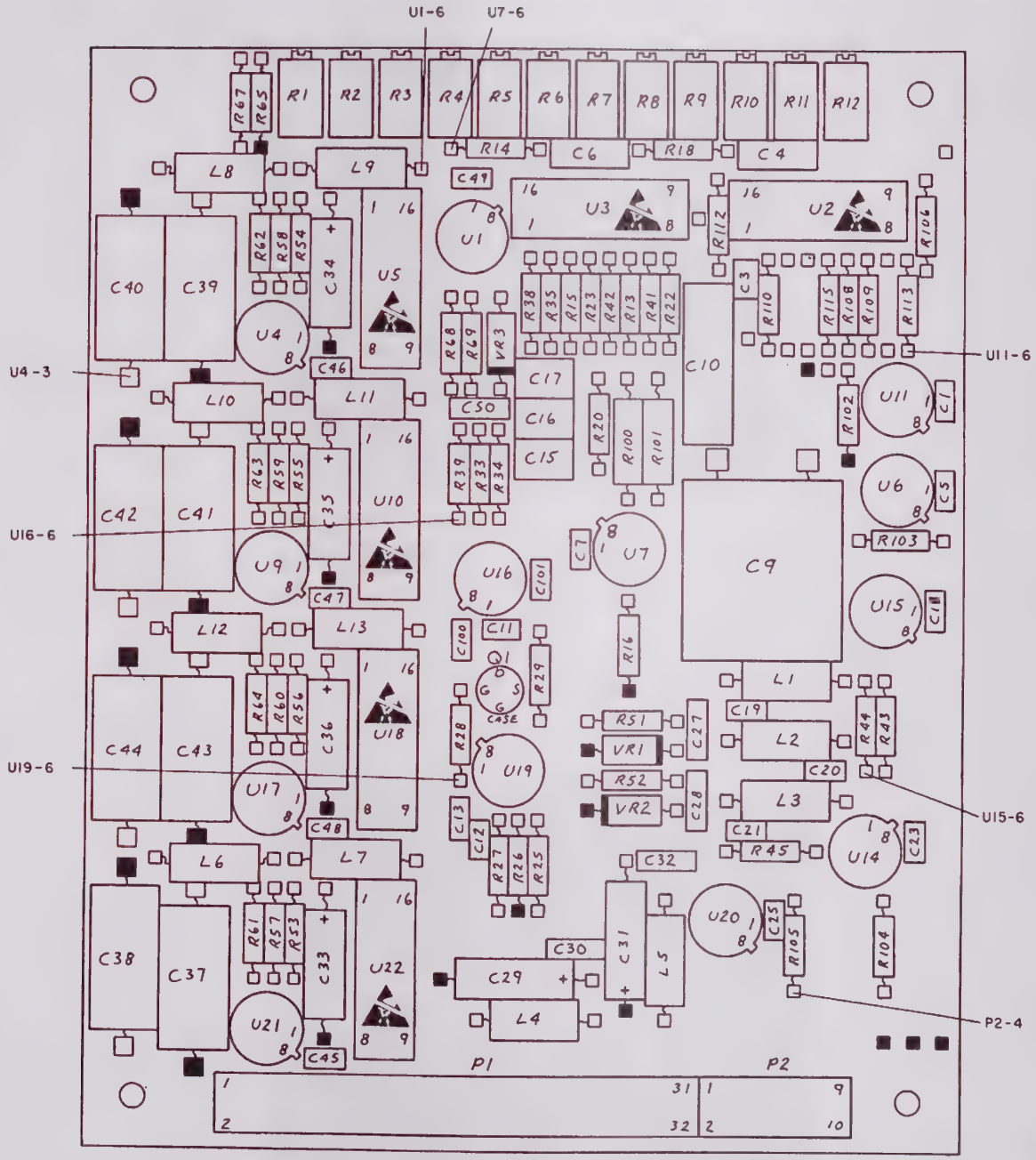

NOTE:
1 ■ IS A GROUND PAD.

TP5-5191-014

Controller/Audio Assembly A2, Analog Board A2A2, Component Location
Figure 26

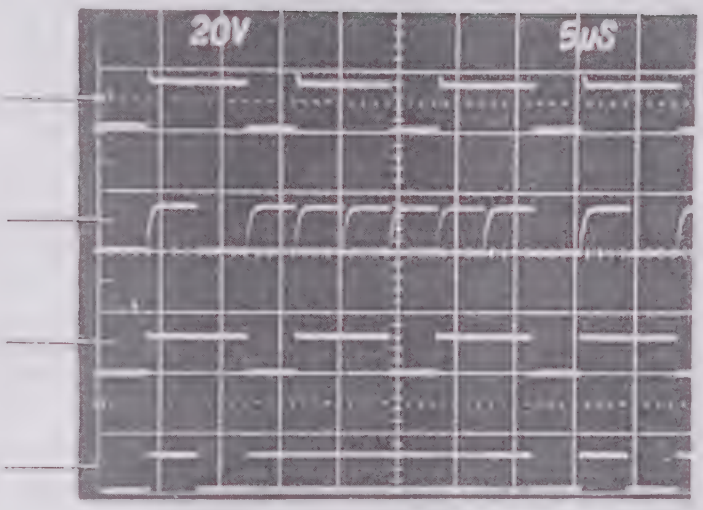

A2A2 Waveforms
Figure 27

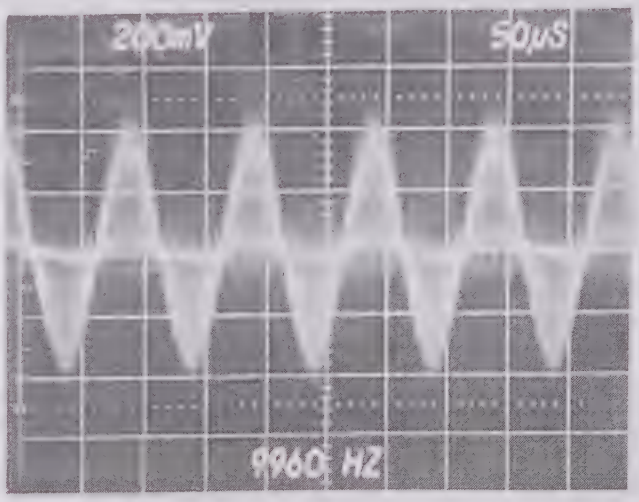

TP5-5384-017

A2A2 U19-6 Waveform
Figure 28

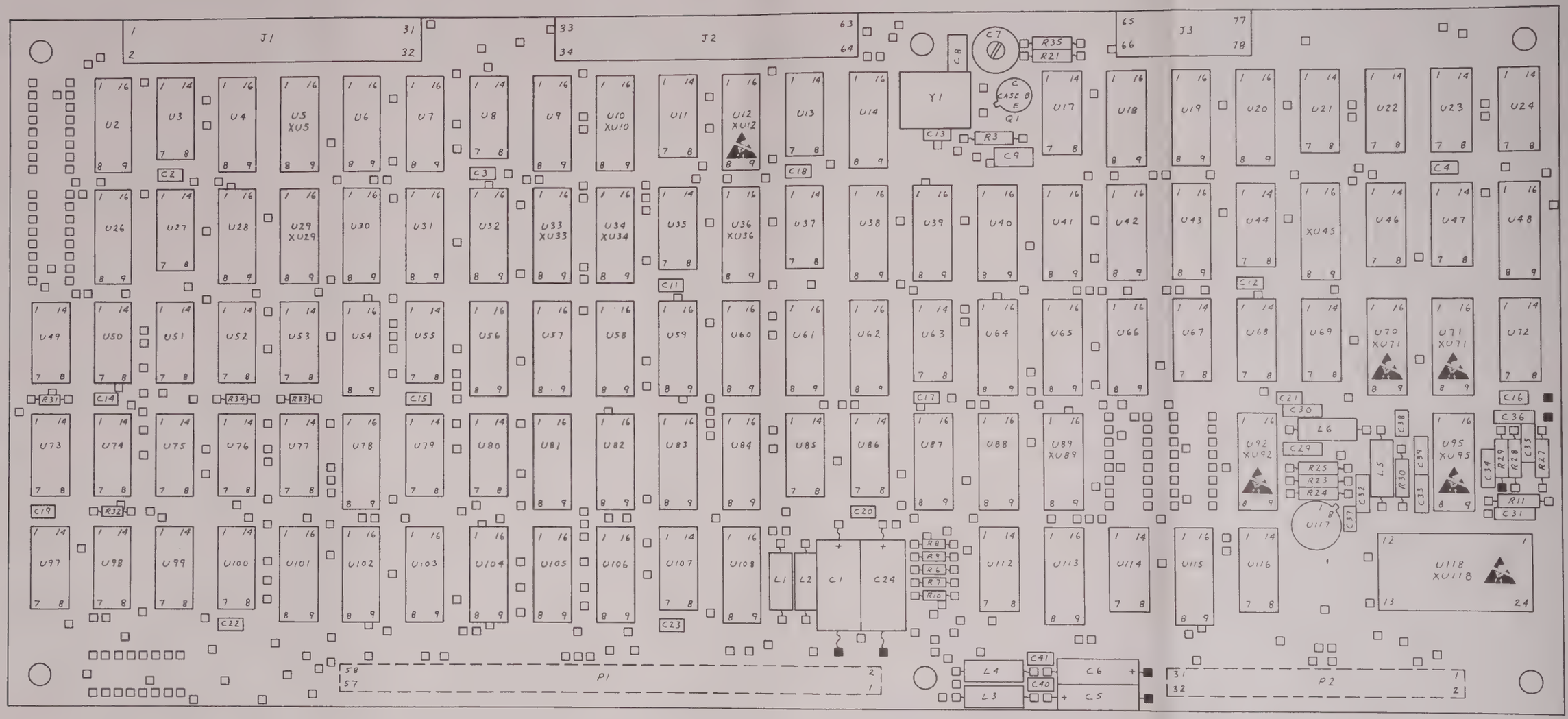

NOTE:
1. ■ IS A GROUND PAD.

TP5-5289-014

Controller/Audio Assembly A2, TDM Board A2A3, Component Location
Figure 29

b. Set TI to the modes given in table 4 and verify logic levels at the given test points.
c. Connect oscilloscope to test points shown in figure 30 and verify waveforms.
d. Perform paragraph 8.3, 8.5, 8.6, and 8.7 alignments.

Table 4. A3A3 Test Points.

MODE	TEST POINT					
	J2-53	J2-35	J2-37	J2-56	J2-51	J2-55
STD VOR	0	1	0	*	0	1
STD VOR AUDIO	0	1	0	*	1	1
STD LOC	1	0	0	0	0	0
STD LOC AUDIO	1	0	1	*	0	0
MB	0	0	0	0	1	0
*1-MHz square wave						

5.4.3 RF Modulator Assembly A3 Troubleshooting

Note

Always troubleshoot demodulator/ALC board A3A2 before troubleshooting rf strip-line assembly A3A1.

5.4.3.1 RF Strip-Line Assembly A3A1 Troubleshooting

In order to properly troubleshoot strip-line assembly A3A1, a special test fixture must be fabricated. Information necessary for fabrication is contained in figure 31A; troubleshooting is accomplished as described below.

a. Remove and disassemble modulator assembly A3 as described in paragraph 6.1.6.
b. Connect A3A1, A3A2, and test equipment as shown in figure 31B. Set S1 through S4 to 0 on A3A1 test fixture.
c. Perform troubleshooting procedures contained in table 5. Refer to figures 31 and 32 for component locations. If a malfunction occurs, the IF INDICATION IS ABNORMAL column gives the components to check or replace. Before replacing any components on the assembly, check assembly and assembly connectors for damage.

Note

Allow a 15-minute warmup period for A3A1 and test equipment setup.

5.4.3.2 Demodulator/ALC Assembly A3A2 Troubleshooting

a. Set TI POWER switch to off.
b. Remove cover from A3. Refer to figure 46.
c. Remove four screws that secure A3A3 to A3A2 and carefully fold back card A3A3, leaving flat cable attached. This provides access to A3A2 test points.
d. Press TI POWER switch to on.
e. Perform troubleshooting procedures contained in table 6. Refer to figure 32 for component locations. If a malfunction occurs, the IF INDICATION IS ABNORMAL column gives the components to check or replace. Before replacing any components on the circuit board, check printed circuit board and circuit board connector for damage.
f. After completion of troubleshooting, carefully fold back A3A3 on A3A2 and secure with four screws.

Note

If A3A3 troubleshooting is required, proceed to paragraph 5.4.3.3. If A3A3 troubleshooting is not required, perform step g.

g. Install cover on A3.

5.4.3.3 Counter-I/O Board A3A3 Troubleshooting

a. Set TI POWER switch to off.
b. Remove cover from A3 (figure 46) to provide access to A3A3 test points. Refer to figure 33 for component locations.
c. Set TI POWER switch to on.
d. Perform troubleshooting procedures contained in table 7. If malfunction occurs, the IF MALFUNCTION IS ABNORMAL column gives the components to check or replace. Before replacing any components on the circuit board, check printed circuit board and circuit board connectors for damage.
e. After completion of troubleshooting, set TI POWER switch to off and install A3 cover.

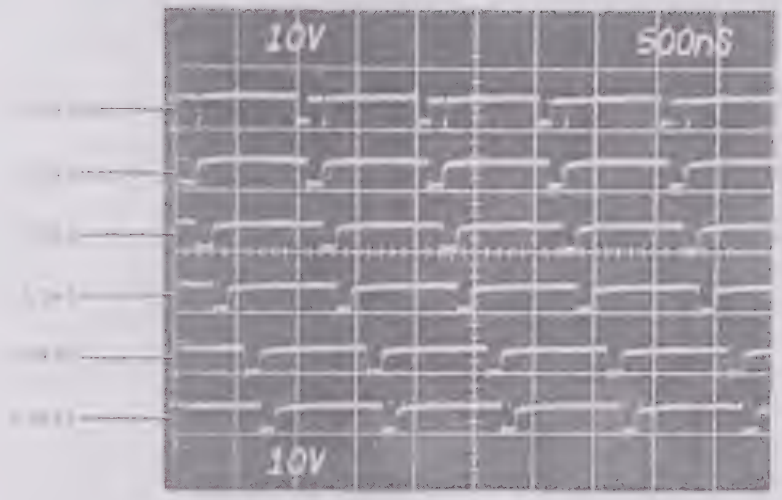

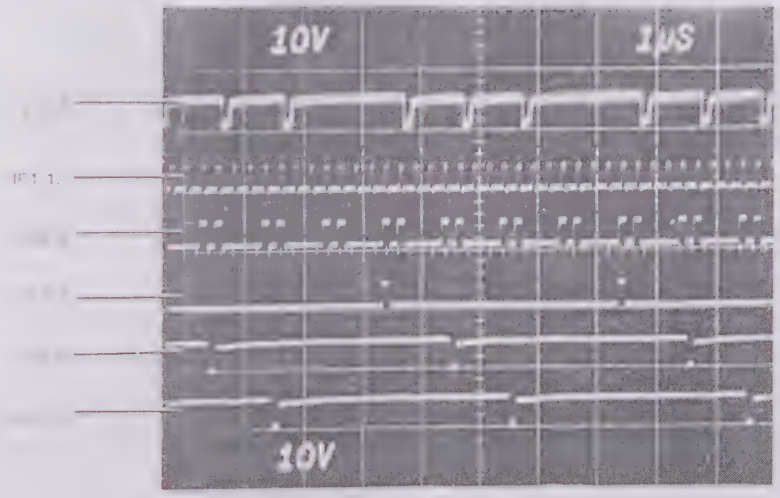

TPS 5385 077

TDM Board A2A3 Waveforms
Figure 30 (Sheet 1 of 2)

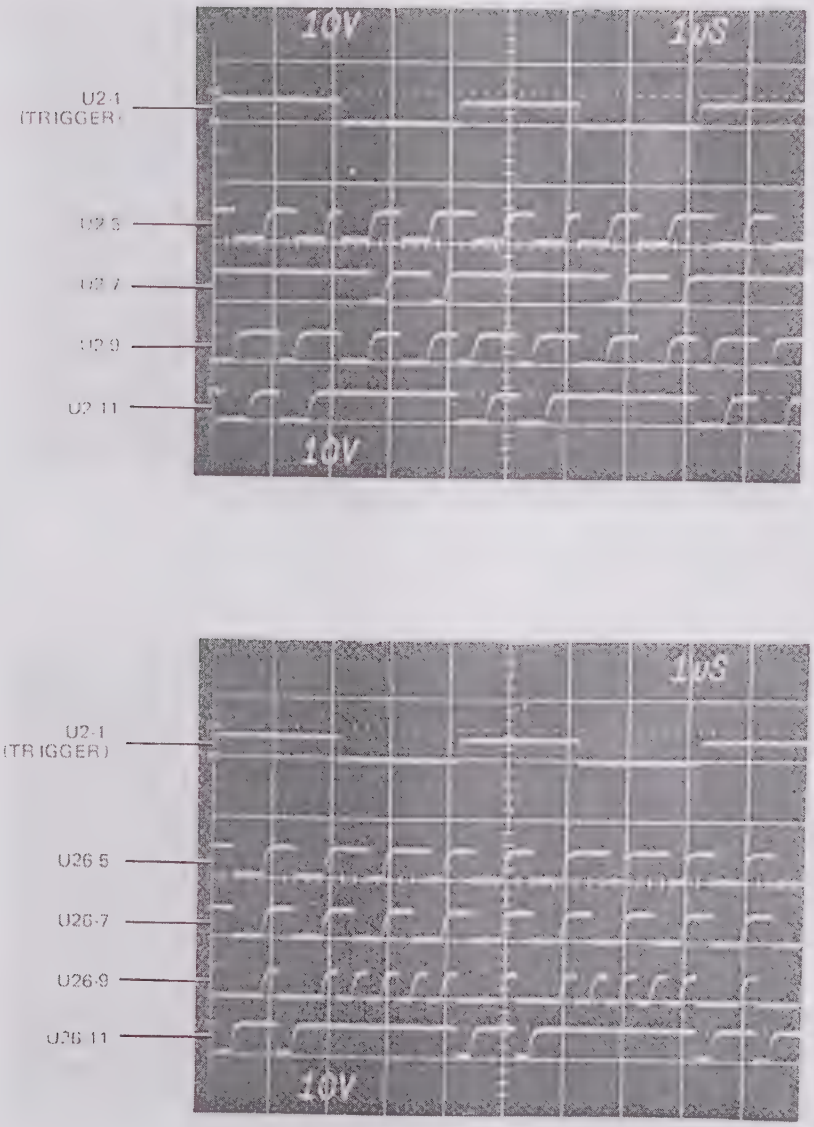

TI SET TO 110.10 MHz

IPS 5385-077

TDM Board A2A3 Waveforms
Figure 30 (Sheet 2)

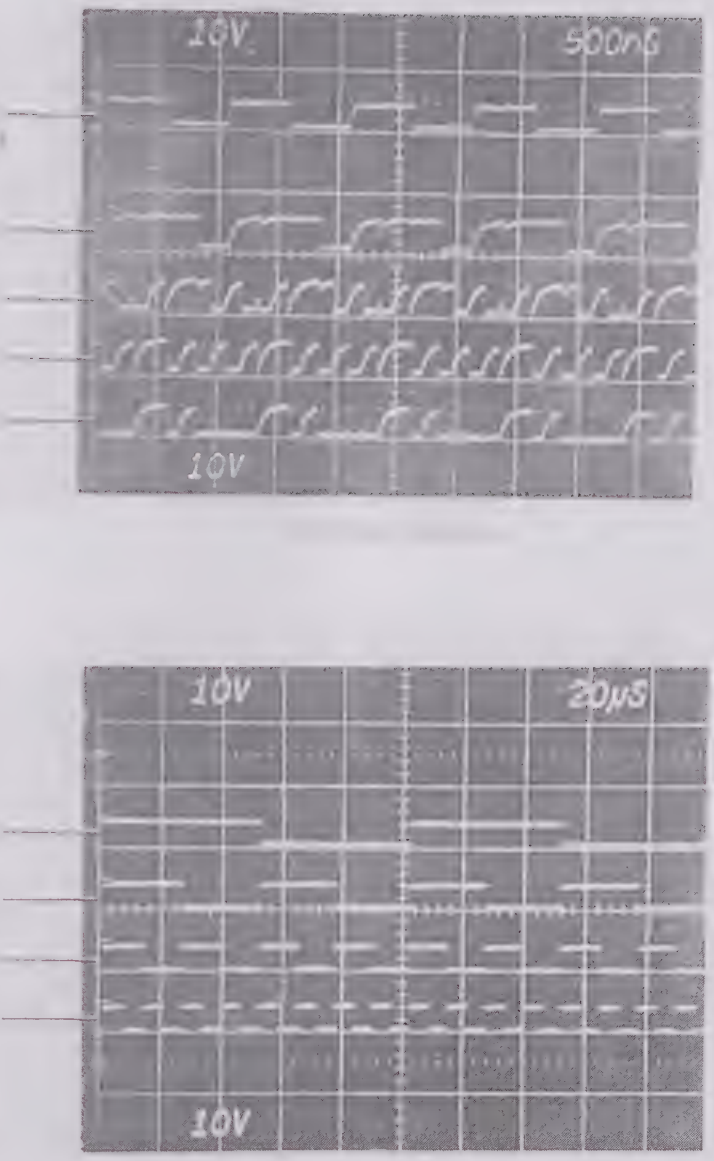

108.00 MHz, 30 Hz VAR, 9960 Hz (NOT 9960 FM)

TP5 5385 077

TDM Board A2A3 Waveforms
Figure 30 (Sheet 3)

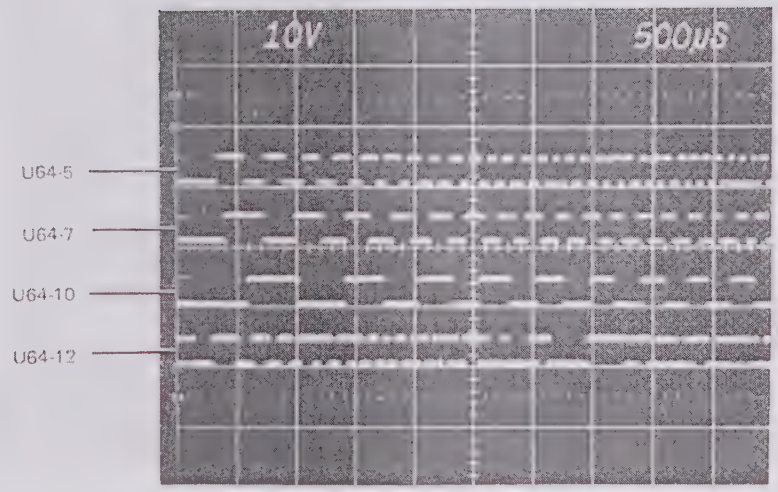

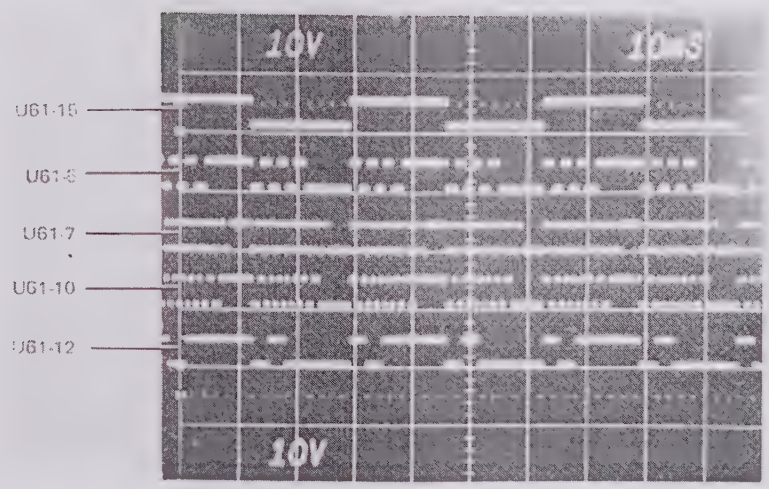

STD VOR 108.00 MHz

TP5 5385-077

TDM Board A2A3 Waveforms
Figure 30 (Sheet 4)

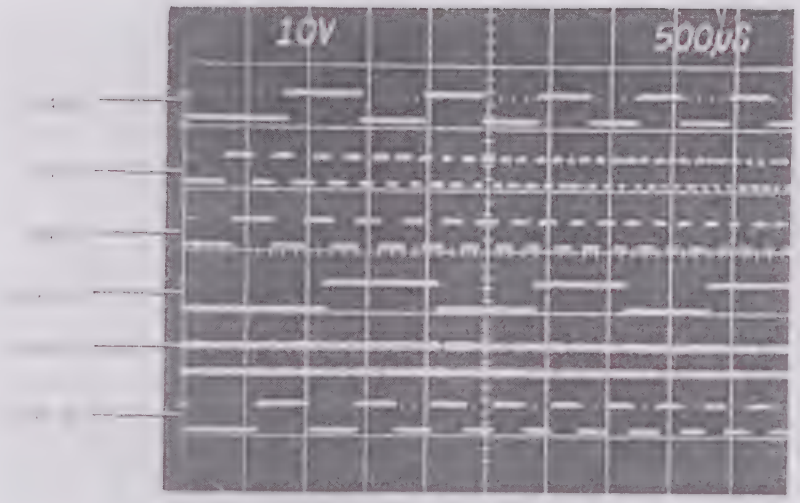

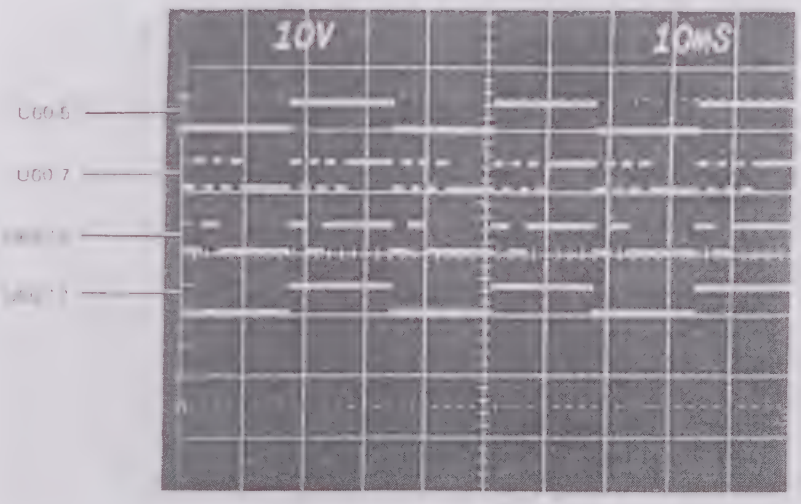

108.00 MHz, 30HzVAR, 9960Hz, (NOT 9960 FM)

TP5 5385-077

TDM Board A2A3 Waveforms
Figure 30 (Sheet 5)

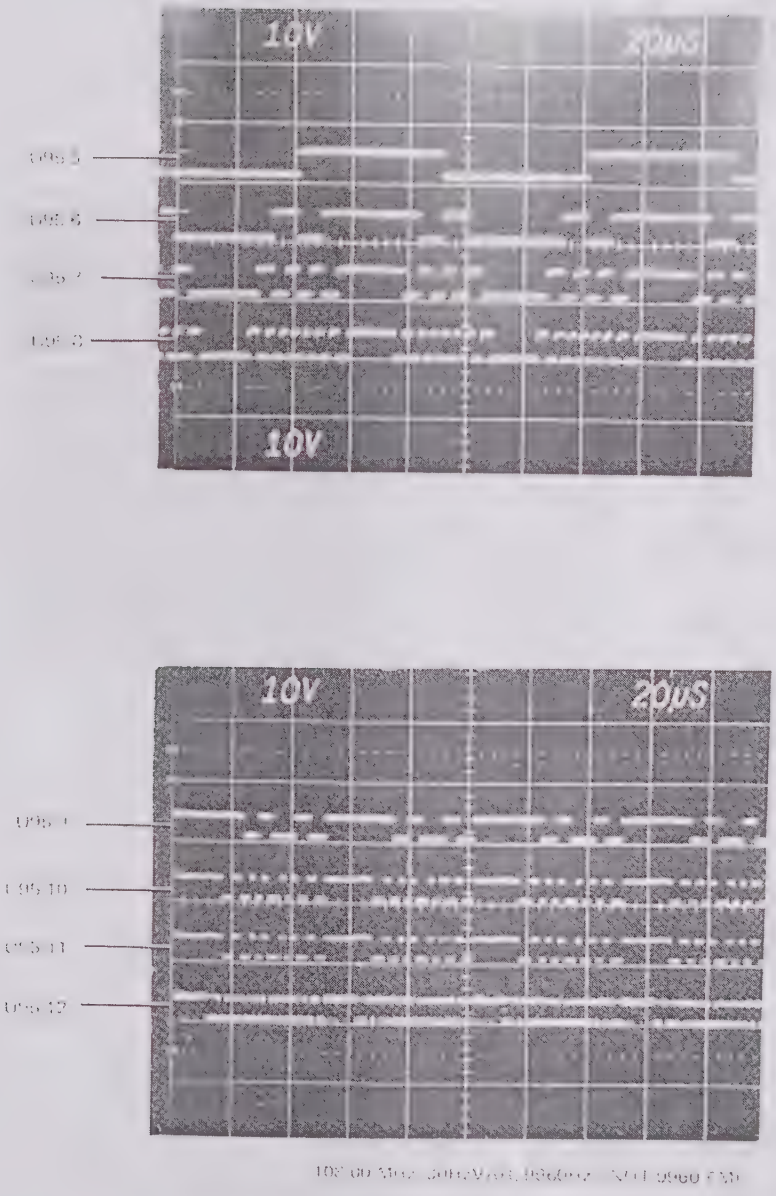

TP5-5385-077

TDM Board A2A3 Waveforms
Figure 30 (Sheet 6)

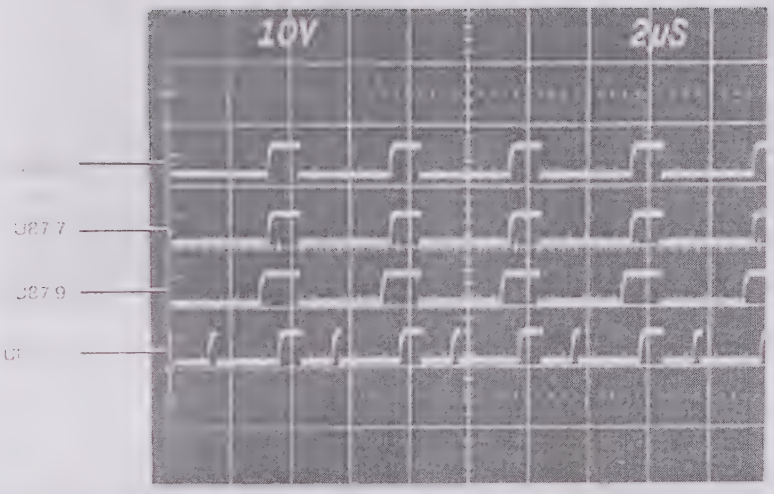

TDM Board A2A3 Waveforms
Figure 30 (Sheet 7)

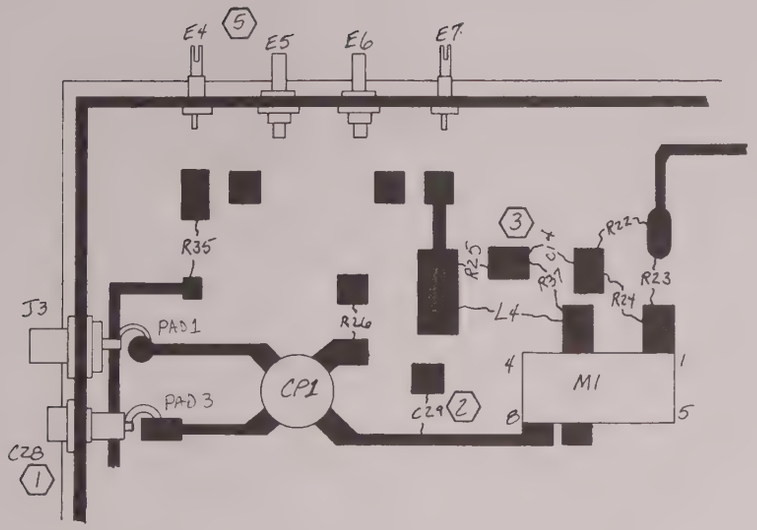

NOTES:

1. C28 LOCATED ADJACENT TO J3, EFFECTIVE REV LTR F. ACCESSABLE WITHOUT REMOVING COVER.
2. ADDED C29 (TEST SELECT, MAY NOT BE NEEDED ON SOME UNITS) EFFECTIVE REV LTR H.
3. REVERSED POSITIONS OF R25 AND C14. ADDED R37, 51 OHMS EFFECTIVE REV LTR K.
4. REMOVED R8, 15 OHMS EFFECTIVE REV LTR L.
5. LEFT UPPER CORNER DETAIL INDICATES CHANGES EFFECTIVE REV LTR F, H AND K.

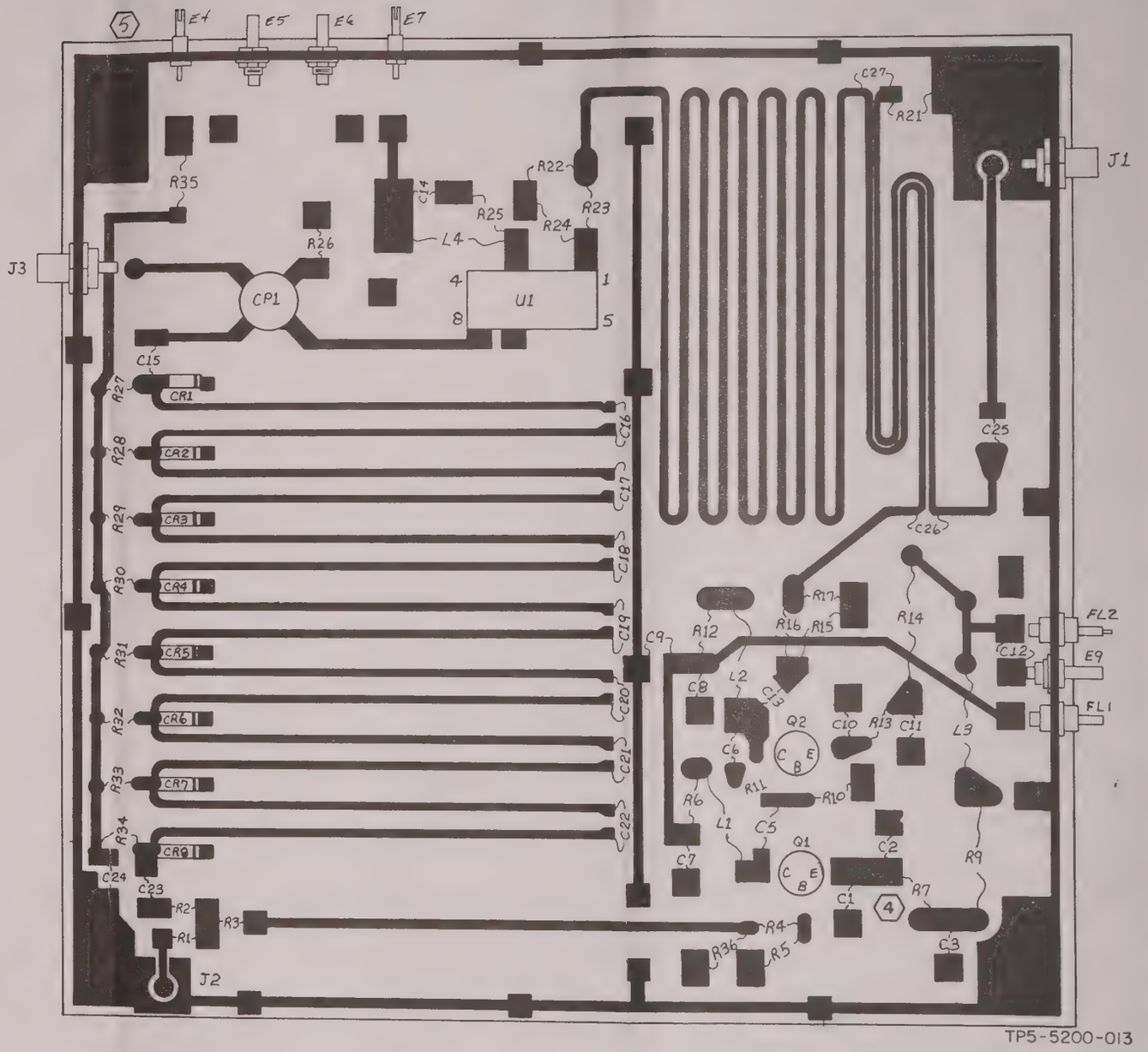

TP5-5200-013

RF Modulator Assembly A3, RF Strip-Line Assembly A3A1. Component Location
Figure 31

Table 5. A3A1 Troubleshooting.

TEST	PROCEDURE	DESIRED RESULTS	IF INDICATION IS ABNORMAL
1	a. Set rf signal generator (2.11) to 332 MHz at +12-dB mW power at J2 of A3A1.		
	b. Adjust A3A1C28 for +2.5 ±0.5 dB mW measured at A3A1J3.	b. +2.5 ±0.5 dB mW	b. Check CR1-CR8, C15-C23, C28, R1-R3, and CP1.
	c. Turn on +15, -15, and +24-V dc power.		
2	a. Set test fixture switches as follows: S1, S3 1 S2, S4 0 Adjust A3A1C2 for power null at A3A1J3.	a. Power null	
	b. Connect dc voltmeter (2.2) to A3A1E7 and E6. Adjust A3A2R6.	b. 65 ±5 mV between E7, E6, -4 ±0.5 dB mW at A3A1J3.	
	c. Connect audio oscillator (2.18) to test fixture J5. Set oscillator for 150 Hz at 1 V rms.		
	d. Connect modulation meter (2.17) to A3A1J3 and set controls as follows: CONTROL — SETTING Tuning — AUTO High pass — 10 Hz Low pass — 15 kHz Peak — Pk-Pk/2 Range — 100 Function — % AM Level — AUTO		
	e. Adjust A3A2R3 for 35% and 45% modulation; then set at 40%. Note If 35% modulation cannot be obtained, increase A3A2R6; if 45% modulation cannot be obtained, decrease A3A2R6.		e. If A3A2R3 adjustment will not obtain 35% and 45%, check A3A2R3, A3A2R6, and A3A2R25.
(Cont)	f. Vary rf signal generator between 329.15 and 335 MHz at +12 dB mW.	f. Modulation level at A3A1J3 is 40 ±0.5%.	f. If % modulation varies from 40 ±0.5%, check A3A1C28 and A3A1C29.

Table 5. A3A1 Troubleshooting (Cont).

TEST	PROCEDURE	DESIRED RESULTS	IF INDICATION IS ABNORMAL
2 (Cont)			Note C29 may not be installed if C28 travel does not exceed one-half cw.
3	a. Set rf signal generator for 335 MHz at 12 dB mW.		
	b. Set af oscillator for 150 Hz (set output for 80% modulation at mod meter).	b. Distortion at rf out of mod meter is less than 2.75%.	b. If distortion exceeds specified limits, check A3A1C2 and A3A1C28. Note If C28 is adjusted, repeat step 2.
4	After completion of these procedures, perform the troubleshooting verification procedures in table 5A.		

Table 5A. A3A1 Troubleshooting Verification.

PROCEDURE	DESIRED RESULTS
1. Power leveling check Set rf signal generator to 332 MHz at +12 ±0.1 dB mW. Set test fixture switches as follows: S1, S3 1 S2, S4 0 Connect power meter to A3A1J3. Adjust A3A2R6 from -3 to -6 dB mW; then set at -5 ±0.1 dB mW measured at A3A1J3.	
Note If desired results are not obtained in any step of this table, table 5 A3A1 troubleshooting must be repeated.	
a. Set signal generator to 332 MHz at +11 ±0.1 dB mW.	a. -5 ±0.25 dB mW
b. Set signal generator to 332 MHz at +13 ±0.1 dB mW.	b. -5 ±0.25 dB mW
c. Set signal generator to 329.15 MHz at +12 ±0.1 dB mW.	c. -5 ±0.25 dB mW
d. Set signal generator to 335 MHz at +12 ±0.1 dB mW.	d. -5 ±0.25 dB mW
e. Set test fixture switches S1 through S4 to 1.	
f. Set signal generator to 118 MHz at +12 ±0.1 dB mW.	f. -5 ±0.25 dB mW
g. Set signal generator to 108 MHz at +12 ±0.1 dB mW.	g. -5 ±0.25 dB mW
2. Modulation leveling check	
a. Set test fixture as follows: S1, S3 1 S2, S4 0	
b. Set modulation meter as follows and connect to A3A1J3. CONTROL — SETTING Tuning — AUTO High pass — 10 Hz Low pass — 15 kHz Peak — Pk-Pk/2 Range — 100 Function — % AM Level — AUTO	
c. Set rf signal generator to 332 MHz at +12 ±0.1 dB mW. Set A3A2R6 for -4 ±0.1 dB mW at A3A1J3.	
d. Connect rf signal generator to test fixture J5, disconnect power meter, and connect mod meter to A3A1J3. Set af signal generator to 150 Hz at 1 V rms ±10 mV rms. Adjust A3A2R3 for 35 to 45% modulation; then set at 40%.	
e. Set rf signal generator to 329.15 MHz at +12 ±0.1 dB mW.	e. 40 ±0.5% modulation

Table 5A. A3A1 Troubleshooting Verification (Cont).

PROCEDURE	DESIRED RESULTS
f. Set rf signal generator to 335 MHz at +12 ±0.1 dB mW.	f. 40 ±0.5% modulation
3. Output distortion check	
a. Set rf signal generator to 335 MHz at +12 ±0.1 dB mW.	
b. Set af signal generator to 150 Hz at 80% modulation.	
c. Connect distortion meter to AF OUT of modulation meter and measure distortion.	c. ≤ 2.75%
d. Check distortion at A3A1E7 and E6.	d. ≤ 1.0%
e. Set test fixture switches S1 through S4 to 0. Disconnect af signal generator from test fixture J5.	
f. Set rf signal generator to 75 MHz at +12 ±0.1 dB mW.	
g. Adjust A3A2R7 between -4 and -6 dB mW; then set at -5 ±0.1 dB mW measured at A3A1J3. Reconnect af signal generator to test fixture J5.	
h. Set af signal generator to 1.3 kHz at 1 V rms ±10 mV. Disconnect power meter and connect modulation meter to A3A1J3.	
i. Adjust A3A2R1 from 90 to 98%; then set at 95%.	
j. Set af output for 97% modulation.	
k. Check distortion at AF OUT of modulation meter.	k. ≤ 4%
l. Check distortion at A3A1E7 and E6.	l. ≤ 1%
m. Set test fixture switches as follows: S1, S3 1 S2, S4 0 Disconnect af signal generator from test fixture J5.	
n. Set rf signal generator to 113 MHz at 12 ±0.1 dB mW. Disconnect modulation meter and connect power meter to A3A1J3.	
o. Adjust A3A2R8 from -4 to -6 dB mW; then set at -5 ±0.1 dB mW at A3A1J3. Reconnect af signal generator to test fixture J5.	
p. Set af signal generator to 10 kHz at 1 V rms ±10 mV.	
q. Set modulation meter LOW PASS to 120 kHz. Disconnect power meter and connect modulation meter to A3A1J3.	
r. Adjust A3A2R2 to obtain between 15 and 25% modulation; then set at 20% modulation.	
s. Set text fixture switches S1 through S4 to 1. Adjust A3A2R4 to obtain between 25 and 35% modulation; then set at 30%.	
t. Check distortion at A3A1E7 and E6.	t. ≤ 1%

Table 5A. A3A1 Troubleshooting Verification (Cont).

PROCEDURE	DESIRED RESULTS
4. Counter output check	
a. Connect power meter to A3A1J1.	
b. Set rf signal generator to 332 MHz at +12 ±0.1 dB mW.	
c. Check power output at A3A1J1.	c. Power level should be -3 to +2 dB mW.
5. End of procedure; dismantle test setup and perform paragraph 8.9 (rf output level alignment).	

Table 6. Demodulator/ALC Board A3A2 Troubleshooting Procedures.

TEST	PROCEDURE	DESIRED RESULTS	IF INDICATION IS ABNORMAL
1	a. Connect dvm (2,2) to U6-1.	a. +6.8 to +7.1 V dc.	a. Check U6.
	b. Connect dvm to U13-16.	b. +6.8 to +7.1 V dc.	b. Check U3.
	c. Connect dvm to U13-7.	c. -6.6 to -7.3 V dc.	c. Check U2.
2	Set TI to 108.00 MHz and press TI ΔF key. Ensure ΔF key lamp is lit.		
	a. Connect dvm to J2-14.	a. +4.85 to +5.15 V dc.	a. Check A2A2.
	b. Connect dvm to U15-6.	b. -4.75 to -5.25 V dc.	b. Check U15 and associated circuits.
	c. Connect dvm to U18-6.	c. +9.3 to +11.3 V dc.	c. Check U18.
3	Press TI ΔF key. Ensure ΔF key lamp is off.		
	Set TI to rf frequencies shown in desired results column. Connect dvm to test points J2-7, J2-10, J2-12, and J2-11 and verify logic levels given for each frequency.	TI RF FREQ / TEST POINT J2-10, J2-11 / TEST POINT J2-7, J2-12 108.00 / 0 / 0 110.10 / 1 / 0 329.30 / 0 / 1 75.00 / 1 / 1	Check A3A3.

Table 6. Demodulator/ALC Board A3A2 Troubleshooting Procedures (Cont).

TEST	PROCEDURE	DESIRED RESULTS	IF INDICATION IS ABNORMAL
4	Set TI to 108.00 MHz, 30-Hz VAR tone only.		
	a. Connect oscilloscope (scope) (2.8) to J2-1.	a. 30-Hz sine wave.	a. Check A2A3.
	b. Connect scope to U13-3.	b. 30-Hz sine wave.	b. Check U9 and U13.
	c. Connect scope to TP1.	c. 30-Hz sine wave.	c. Check U10.
	d. Connect dvm to U4-3.	d. +3.3 to +7.2 V dc.	d. Check U1 and U4.
	e. Connect dvm to TP3.	e. -3.2 to -7.4 V dc.	e. Check U5.
	f. Connect scope to J3-6.	f. 30-Hz sine wave.	f. Check A3A1.
	g. Connect scope to TP2.	g. 30-Hz sine wave.	g. Check U11.
	h. Connect scope to U7-6.	h. 30-Hz sine wave.	h. Check U7.
	i. Connect scope to TP5.	i. 30-Hz sine wave.	i. Check U8.
	j. Connect scope to TP2.	j. 30-Hz sine wave.	j. Check U16.
	k. Connect dvm to CR1 cathode.	k. Logic 0.	k. Check U17, CR1, CR2.
5	Set TI to standard VOR signal at 108.00 MHz. Connect scope to TP4.	Waveform as shown in figure 40.	Check U12 and associated circuits.
6	Set TI rf output to OFF. Connect dvm to CR1 cathode.	Logic 1.	Check U17, CR1, CR2.
7	Set TI to 329.15 MHz without modulation (No TONE SELECT keys lit).		
8	Connect audio oscillator (2.18) to TI EXT MOD connector and set to produce 150-Hz signal at a nominal 3 V rms.		
9	Connect scope to U16-6.	150-Hz undistorted waveform.	Check U14 and associated circuits.
10	Perform paragraph 8.9 and 8.10 alignments.		

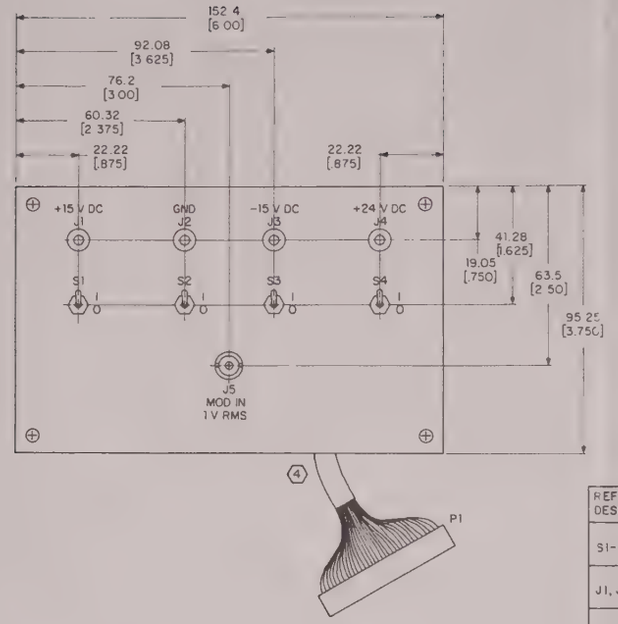

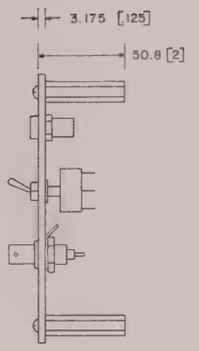

FUNCTION	S1	S2	S3	S4
VOR	0	0	0	0
LOC	0	1	0	1
GS	1	0	1	0
MB	1	1	1	1

REFERENCE DESIGNATOR	QTY	ITEM DESCRIPTION	COLLINS PART NUMBER OR EQUIVALENT (3)
S1-S4	4	SWITCH, TOGGLE SPDT	266-5321-150
J1, J3, J4	3	BANANA JACK, RED	372-1062-000
J2	1	BANANA JACK, BLACK	372-1061-000
P1	1	40 PIN ELECTRICAL CONNECTOR	372-2626-029
CONTACTS	12	CONTACTS (INSERTED IN P1)	372-2255-010
SCREWS	4	MOUNT STANDOFFS TO CHASSIS	343-0328-000
STANDOFFS	4	2" FEMALE HEX STANDOFF	540-9233-003
J5	1	BNC CONNECTOR	357-9670-000
WIRE		(AS REQUIRED, 20 OR 22 GUAGE HOOKUP WIRE)	
CHASSIS	1	3.175 [125] ALUMINUM OR EQUIVALENT TO SUPPORT TESTING PROCEDURES	

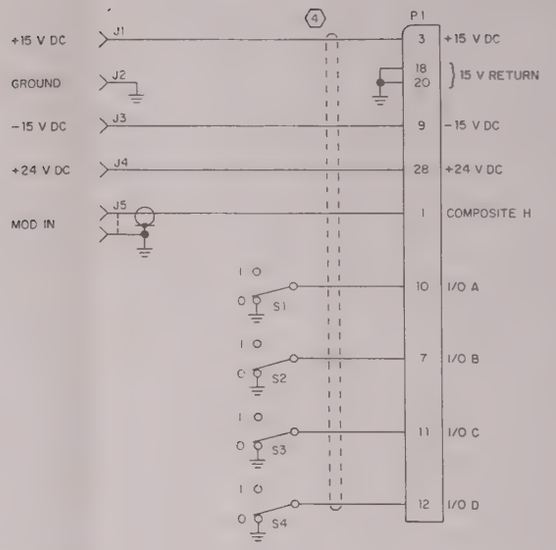

NOTES

1. DIMENSIONS ARE IN MILLIMETRES [INCHES].
2. P1 MATES WITH J2 ON A3A2 DEMODULATION BOARD.
3. PARTS NEED ONLY SATISFY PHYSICAL AND/OR ELECTRICAL DESCRIPTION.
4. PENDANT CABLE 304-8 [12.00] (APPROX).

TP5-6576-014

A3A1 Test Fixture, Fabrication Diagram
Diagram
Figure 31A

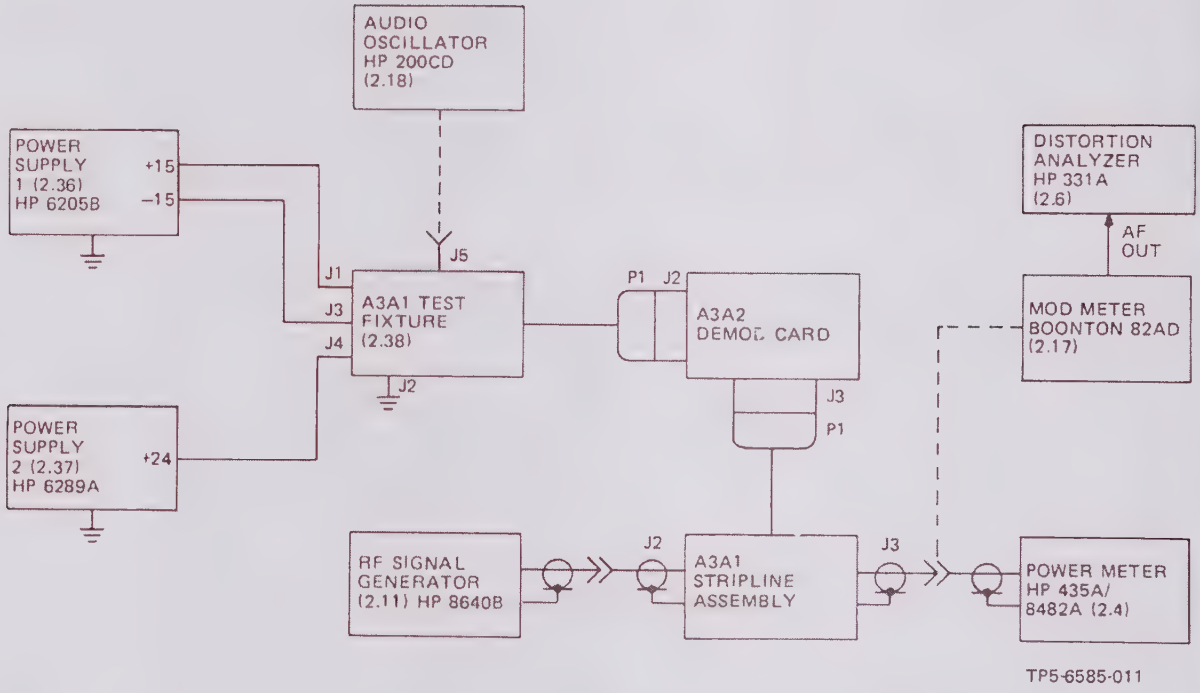

A3A1 Strip-Line Test Equipment, Setup Diagram
Figure 31B

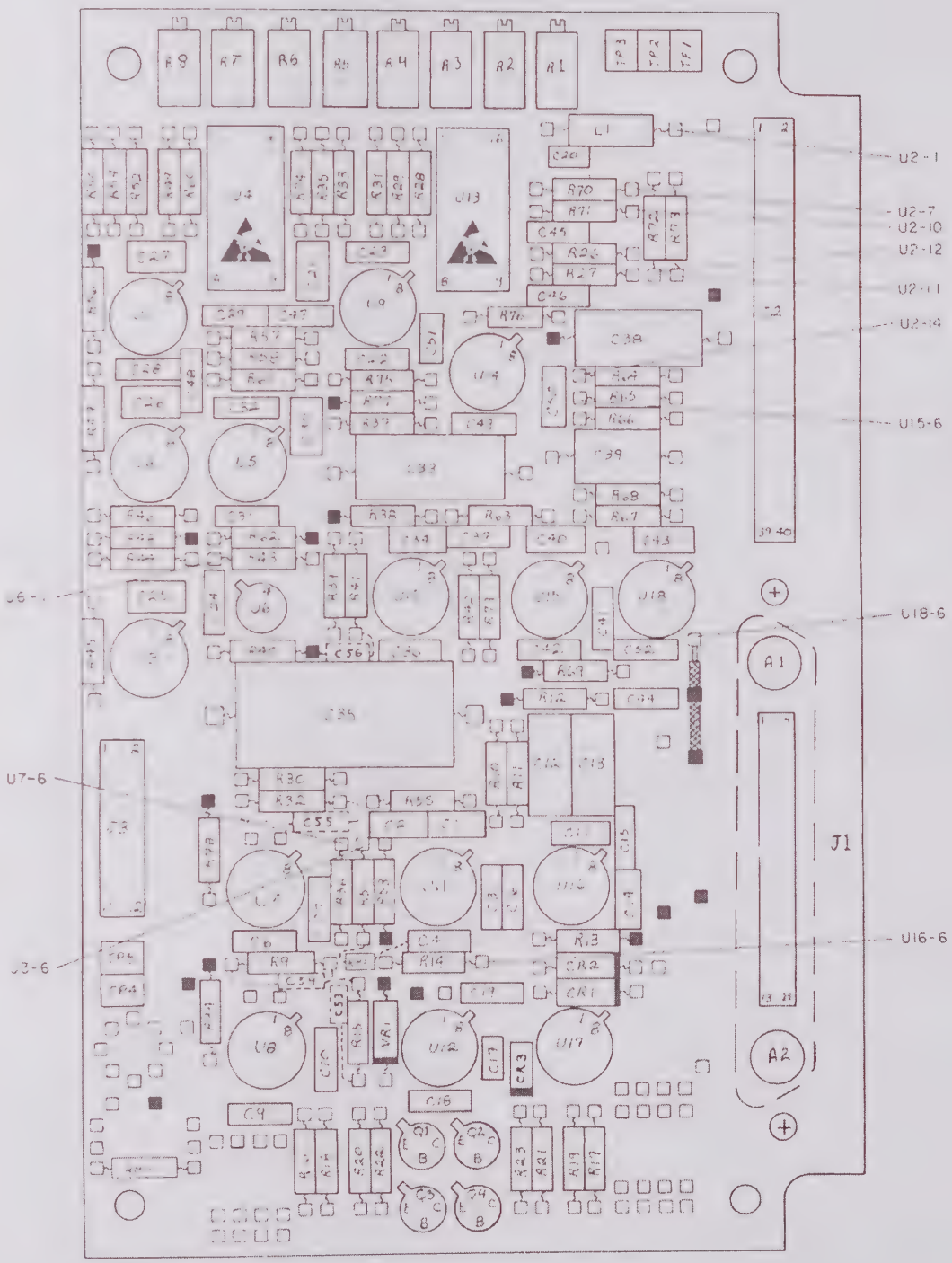

Demodulator/ALC Assembly A3A2, Component Location
Figure 3-3

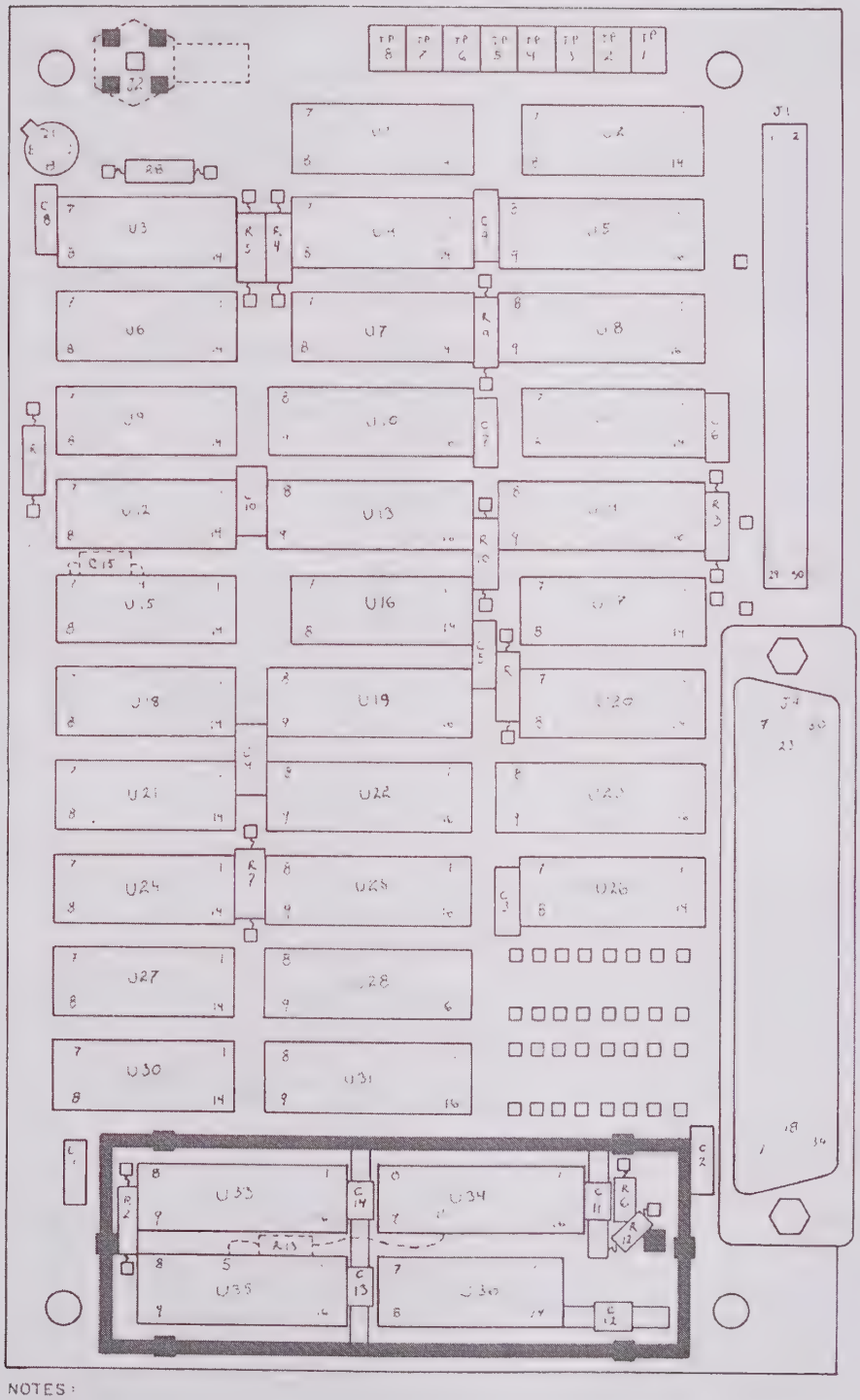

NOTES:
1. ■ IS A GROUND PAD.
2. R13, C15, AND J2 ARE MOUNTED ON BACKSIDE OF BOARD

TP5-5190-014

RF Modulator Assembly A3, Counter I/O Board A4A3, Component Location Figure ...

Table 2. Counter I/O Board A3A3 Troubleshooting Procedures.

TEST	PROCEDURE	DESIRED RESULTS	IF INDICATION IS ABNORMAL
1	a. Connect dvm (2.2) to U3-12.	a. Logic 1.	a. Check U3.
	b. Connect oscilloscope to the following test points.		
	1. U1-11	1. 10-kHz waveform, 20% duty cycle.	1. Check U1.
	2. U4-11	2. 1-kHz waveform, 20% duty cycle.	2. Check U4.
	3. U7-11	3. 100-Hz waveform, 20% duty cycle.	3. Check U7.
	4. U6-11	4. 10-Hz waveform, 20% duty cycle.	4. Check U6.
2	Connect scope to each of the following test points:		
	U13-10	Periodic logic 0 spike (500 ns spike every 4 ms)	Check U13, U15A, U15D, U12A.
	U13-11		
	U13-12		
	U13-13		
	U13-14		
	U13-15		
3	Connect scope to the following test points.		
	U15-4	Periodic logic 1 spike.	Check U15B.
	TP3	Periodic logic 0 spike.	Check U36C.
	TP6	Periodic 100-ms logic 1 pulse.	Check U9.
	TP7	Periodic 100- to 200-ms logic 0 pulse.	Check U9.
4	Set TI to 108.00 MHz. Connect scope to:		
	a. U36-5	a. 10.8-MHz waveform.	a. Check U34.
	b. U36-6	b. Periodic 100-ms logic 0 burst (burst at 10.8-MHz rate).	b. Check U36B.
5	Connect dvm to U22-14.		
	a. Press RF ON/OFF key to turn off rf.	a. Logic 0.	a. Check Q1.
	b. Press RF ON/OFF key to turn on rf.	b. Logic 1.	b. Check Q1.

Table 7. Counter-I/O Board A3A3 Troubleshooting Procedures (Cont)

TEST	PROCEDURE	DESIRED RESULTS	IF INDICATION IS ABNORMAL
6	Set TI to frequencies listed in DESIRED RESULTS column and measure logic levels with dvm at the following test points.		

	FREQUENCY (MHz)				
	74.625	112.80	329.15		
a. U17-9	0	0	1	a.	Check U17 and U10
b. U17-5	0	1	1	b.	
c. U14-15	0	0	0	c.	Check U14 and U10
d. U14-12	1	0	0	d.	
e. U14-10	1	0	1	e.	
f. U14-7	1	1	0	f.	
g. U14-5	0	0	1	g.	
h. U14-2	1	0	0	h.	
i. U11-9	0	1	0	i.	Check U11 and U10
j. U11-5	0	0	1	j.	
k. U8-15	0	1	0	k.	Check U8 and U10
l. U8-12	1	0	0	l.	
m. U8-10	1	0	0	m.	
n. U8-7	0	0	1	n.	
o. U8-5	0	0	1	o.	
p. U8-2	1	0	0	p.	

7	a. Set TI to 108.00 MHz. Connect dvm to following test points.		
	1. U2-2	1. Logic 0.	1. Check U2, U5, and U10.
	2. U2-4	2. Logic 0.	2.
	3. U2-12	3. Logic 0.	3.
	4. U2-10	4. Logic 0.	4.
	b. Set TI to 75.000 MHz. Connect dvm to following test points.		
	1. U2-2	1. Logic 1.	1. Check U2, U5, and U10.
	2. U2-4	2. Logic 1.	2.
	3. U2-12	3. Logic 1.	3.
	4. U2-10	4. Logic 1.	4.
8	a. Press ΔF key for ΔF operation. Connect dvm to U5-15.	a. Logic 1.	a. Check U5 and U10.
	b. Press ΔF key to turn off ΔF operation. Connect dvm to U5-15.	b. Logic 0.	b. Check U5 and U10.

Table 7. Counter-I/O Board A3A3 Troubleshooting Procedures (Cont).

TEST	PROCEDURE	DESIRED RESULTS	IF INDICATION IS ABNORMAL
9	a. Press RF ON/OFF key to turn off rf.	a. Logic 0.	a. Check U5 and U10.
	b. Press RF ON/OFF key to turn on rf.	b. Logic 1.	b. Check U5 and U10.
10	a. Set TI to -48 dB mW. Connect dvm to the following test points.	*Note* L1 is +10 to +14 V dc. L0 is less than 0.7 V dc.	
	1. U3-2	1. L1	1. Check U3A, U3B, U20A, and U10.
	2. U26-2	2. L0	2. Check U26, U23, and U10.
	3. U26-4	3. L1	3.
	4. U26-6	4. L0	4.
	5. U26-8	5. L1	5.
	6. U26-10	6. L0	6.
	7. U26-12	7. L1	7.
	b. Set TI to -91 dB mW. Connect dvm to the following test points.		
	1. U3-2	1. L0	1. Check U3A, U3B, U20A, and U10.
	2. U26-2	2. L1	2. Check U26, U23, and U10.
	3. U26-4	3. L0	3.
	4. U26-6	4. L1	4.
	5. U26-8	5. L0	5.
	6. U26-10	6. L1	6.
	7. U26-12	7. L0	7.
11	Set TI to 108.00 MHz.	a. PH LOCK indicator is lit.	a. Check U22D.
		b. LEVEL CAL indicator is lit.	b. Check U22F.
		c. Frequency display is correct.	c. Display digit: 1. 100 MHz - Check U19E, U19F, and U16. 2. 10 MHz - Check U25A thru D and U24.
(Cont)			

Table 7. Counter-I/O Board A3A4 Troubleshooting Procedures (Cont)

TEST	PROCEDURE	DESIRED RESULTS	IF INDICATION IS ABNORMAL
11 (Cont)			3. 1 MHz - Check U22A thru D and U21. 4. 100 kHz - Check U28A thru D and U27. 5. 10 kHz - Check U19A thru D and U18. 6. 1 kHz - Check U31A thru D and U30.
12	Press ΔF key for ΔF operation.	100-Hz digit is displayed correctly.	Check U25E, U25F, U31E, U31F, U36A, U36D, U33, and U35.

5.4.4 Synthesizer Assembly A4 Troubleshooting

Table 8 provides the troubleshooting procedures for synthesizer assembly A4. Before starting the procedure, extend the A3/A4 modules from the TI as described in paragraph 5.1. Remove the cover from the A4 module (figure 47) to allow access to A4 test points and extend A4 from A3. Refer to figure 34 for component location.

If a malfunction occurs, the IF INDICATION IS ABNORMAL column in table 8 gives the components to check or replace. Before replacing any components on the module, check the printed circuit, wiring, and module connectors for damage.

Table 8. Synthesizer Assembly A4 Troubleshooting Procedures.

TEST	PROCEDURE	DESIRED RESULTS	IF INDICATION IS ABNORMAL
1. +20-V dc supply	Connect dvm (2,2) to A4A1A1-C42(+). (First verify +24- and -9-V input voltages.)	+20.00 ±0.15 V dc.	Adjust A4A1A1R51 for desired results. If unable to adjust correctly, check A4A1A1Q5, Q6, Q7, Q8, Q9, Q11, VR2, and A4A1CR4.
2. +5-V dc supply	Connect dvm to A4A1A1C52(+)	+5.0 ±0.1 V dc.	Check A4A1A1U20 and Q12.
3. TCXO A4A4	Connect oscilloscope (scope) (2.8) to A4A1A1U7-14.	3.2-MHz square wave.	Check A4A4. Perform paragraph 8.8 alignment.
4. TCXO divider	Connect scope to the following A4A1A1 test points.		
	a. U7-11	a. 200-kHz square wave.	a. Check U7.
	b. U6-9	b. 100-kHz square wave.	b. Check U6.
	c. U6-11	c. 25-kHz square wave.	c. Check U6.
	d. U3-11	d. 100-kHz square wave.	d. Check U3.
5. Vfo circuit	Set TI to 108.000 MHz, ΔF to off. Verify logic 0 at A4A1A1U4-1.		
	a. Connect dvm to A4A1A1U4-3.	a. 5.9 V dc nom.	a. Verify inputs from counter C/O board A3A3 latches are correct. Check U4, VR1, and Q1.
	b. Connect scope to A4A1A1U4-8.	b. 25-kHz square wave.	b. Check U4.
	c. Press ΔF key to turn on ΔF operation.	c. Verify +10 ±0.3 V dc at A4P1-A1.	c. Check analog board A2A2 and TDM board A2A3 for outputs. Check A3A2.
	d. Connect scope to A4A1A1U21-1.	d. 16 MHz nom square wave with amplitude equivalent to logic 1.	d. Check A4A1A1Q1, Q2, Q3, CR1, CR2, CR3, VR1, and Y1.
	e. Connect scope to the following A4A1A1 test points.		
	1. U21-9	1. 4-MHz nom square wave.	1. Check U21.
	2. U1-11	2. 250-kHz nom square wave.	2. Check U1.
	3. U2-11	3. 25-kHz nom square wave.	3. Check U2.
	4. U4-11	4. 25-kHz nom square wave.	4. Check U4.
	5. U4-6	5. 25-kHz nom square wave.	5. Check U4.

Table x. Synthesizer Assembly A4 Troubleshooting Procedures (Cont)

TEST	PROCEDURE	DESIRED RESULTS	IF INDICATION IS ABNORMAL
6. Band selector	a. Press ΔF to turn off ΔF operation. Verify logic levels at the following A4A1A1 test points.		
	1. U10-10	1. Logic 0	Check U10 and U11.
	2. U11-6	2. Logic 1	
	3. U11-3	3. Logic 0	
	4. U11-8	4. Logic 0	
	5. U10-13	5. Logic 1	
	6. U11-11	6. Logic 1	
	b. Set TI to 75.000 MHz. Verify logic levels at the following A4A1A1 test points.		
	1. U10-10	1. Logic 1	Check U10 and U11.
	2. U11-6	2. Logic 1	
	3. U11-3	3. Logic 1	
	4. U11-8	4. Logic 0	
	5. U10-13	5. Logic 0	
	6. U11-11	6. Logic 0	
	c. Set TI to 329.15 MHz. Verify logic levels at the following A4A1A1 test points.		
	1. U10-10	1. Logic 0	Check U10 and U11.
	2. U11-6	2. Logic 1	
	3. U11-3	3. Logic 0	
	4. U11-8	4. Logic 1	
	5. U10-13	5. Logic 0	
	6. U11-11	6. Logic 0	
7. Variable divider, output amplifier, vco, phase-frequency discriminator	Perform procedures given in figure 41.		

5.4.5 Power Supply Assembly A5 Troubleshooting

Table 9 provides the troubleshooting procedures for power supply assembly A5. The table is presented in the form of a malfunction checklist assuming the power supply voltage checklist in figure 21 has failed. Refer to figure 35 for component locations.

The IF INDICATION IS ABNORMAL column in table 9 gives the components to check or replace if a procedure fails. Before replacing any components on the module, check the printed circuit, wiring, and module connectors for damage.

Table 9. Power Supply Assembly A5 Troubleshooting Procedures

MALFUNCTION	PROCEDURE	DESIRED RESULTS	IF INDICATION IS ABNORMAL
1. No voltage present	a. Check A5F1.		
	b. Check A1S54 (POWER).		
	c. Check A5T1.		
2. No +5 V dc	a. Check A5A1F1.		
	b. Connect dvm (2.2) from A5T1-12 to A5T1-16.	b. 7.5 to 11 V ac.	b. Check A5T1.
	c. Connect dvm to A5C2(+).	c. +10.5 to +15.5 V dc.	c. Check A5A1CR3, A5A1CR4, A5C2, and A5C3.
	d. Connect dvm from A5T1-9 to A5T1-10.	d. 12.5 to 19 V ac.	d. Check A5T1.
	e. Connect dvm to A5C1(+).	e. +18 to +27 V dc.	e. Check A5A1CR5, A5A1CR6, and A5C1.
	f. Connect dvm to A5A2TP2.	f. +6.90 to +7.40 V dc.	f. Check A5A2U1.
3. No -24 V dc	a. Connect dvm from A5T1-5 to A5T1-6.	a. 20 to 28 V ac.	a. Check A5T1.
	b. Connect dvm to A5A1CR2(+).	b. +26.5 to +39.5 V dc.	b. Check A5A1CR1, A5A1C2, and A5A2U4.
4. No -15 V dc	a. Connect dvm from A5T1-7 to A5T1-8.	a. 12.5 to 19 V ac.	a. Check A5T1.
	b. Connect dvm to A5A1CR1(-).	b. -18 to -27 V dc.	b. Check A5A1CR1, A5A1C1, and A5A2U5.
5. No +15 V dc	Check A5A2U3.		
6. No +9 V dc	Check A5A2U2 and A5A2Q4.		
7. No +12 V dc	Check A5A4Q2, VR1, and VR2.		
8. No 15 V ac	Check, A5A1F2 and F3.		
9. Voltages out of tolerance	Perform paragraph 8.2 alignments.		

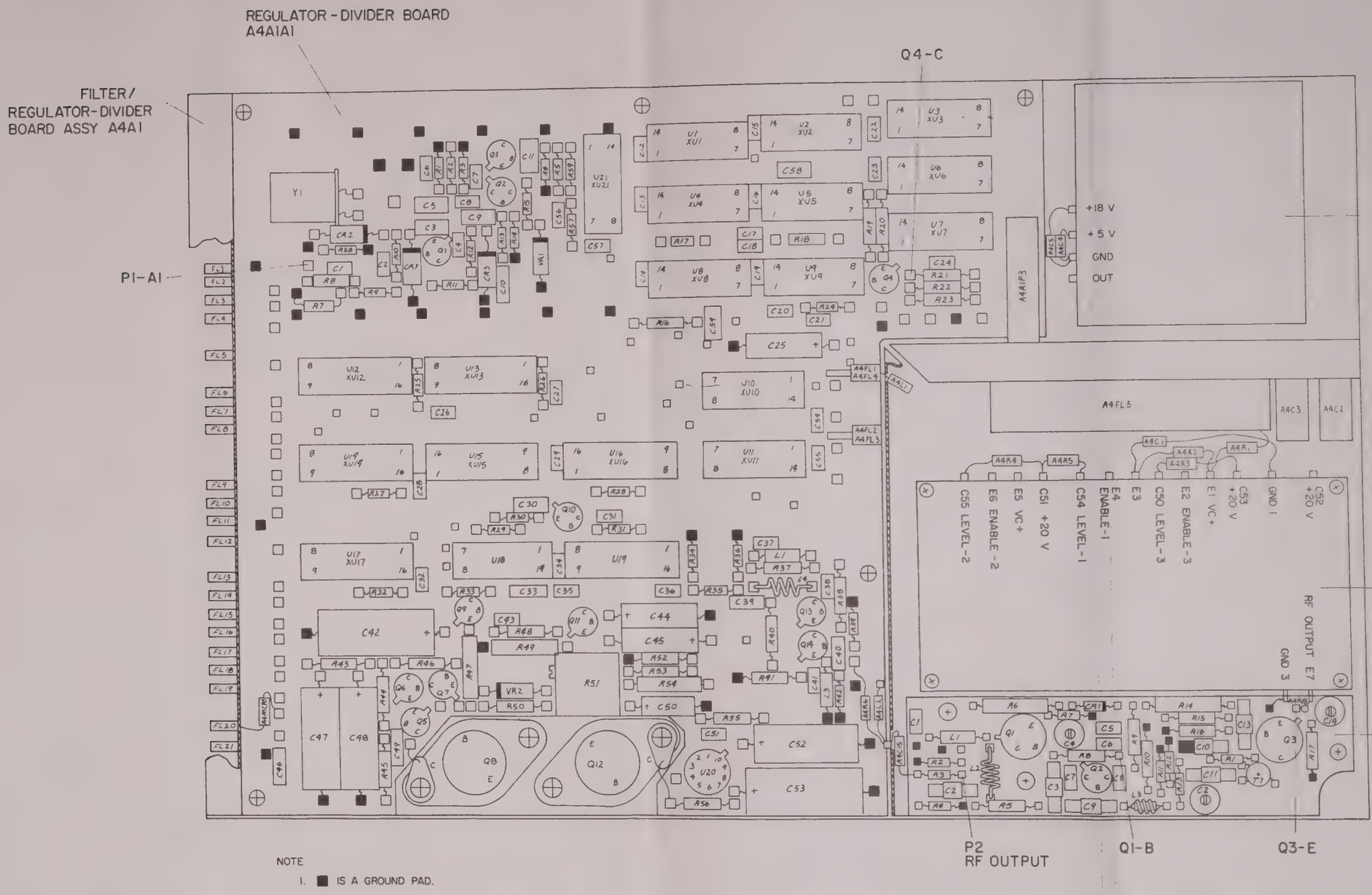

Synthesizer Assembly A4 (With A4A2 CPN 637-2718-001). Component Location
Figure 3-4

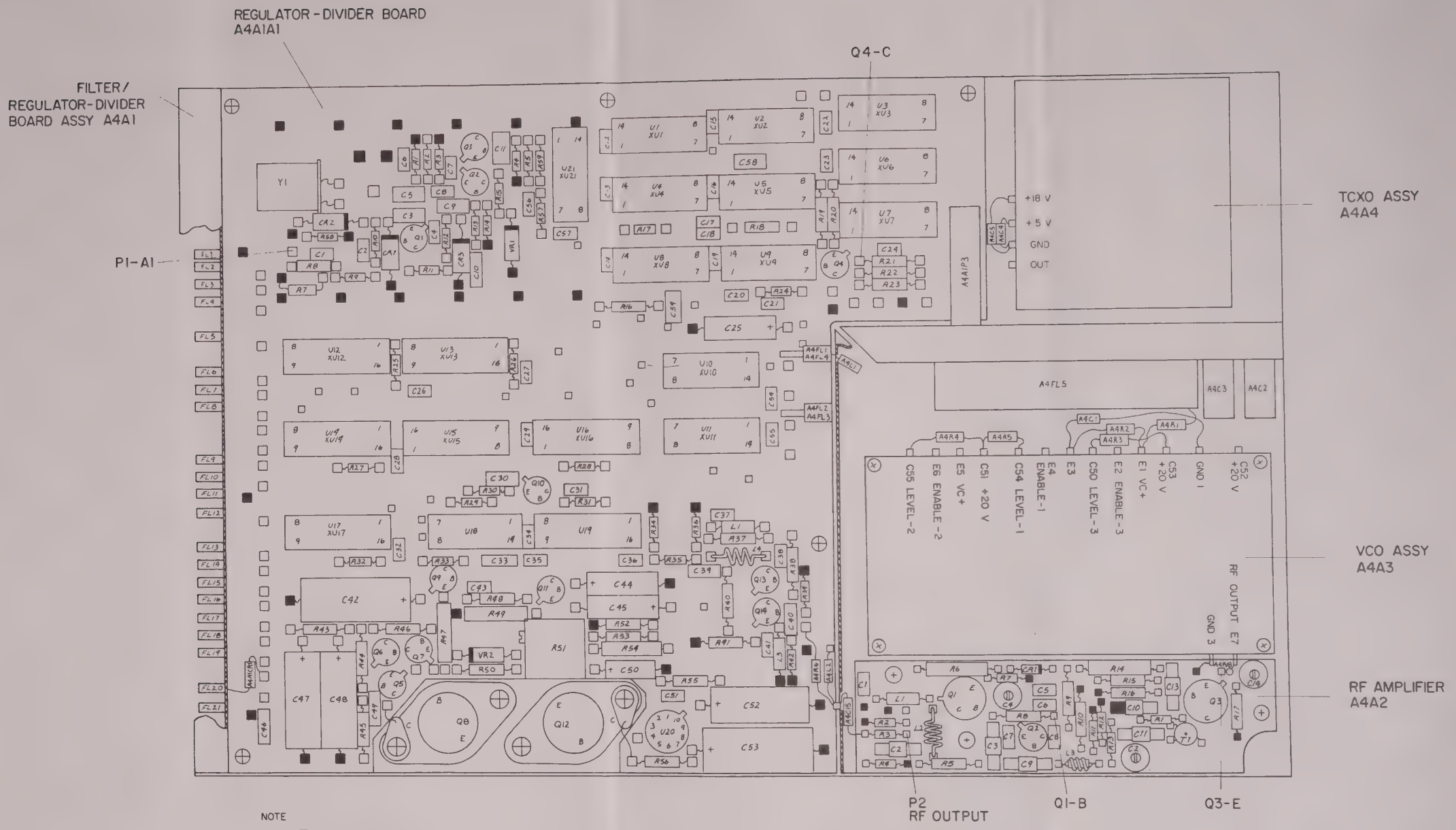

TP5-5201-014

Synthesizer Assembly A4 (With A4A2 CPN 637-2718-001).
Component Location
Figure 34

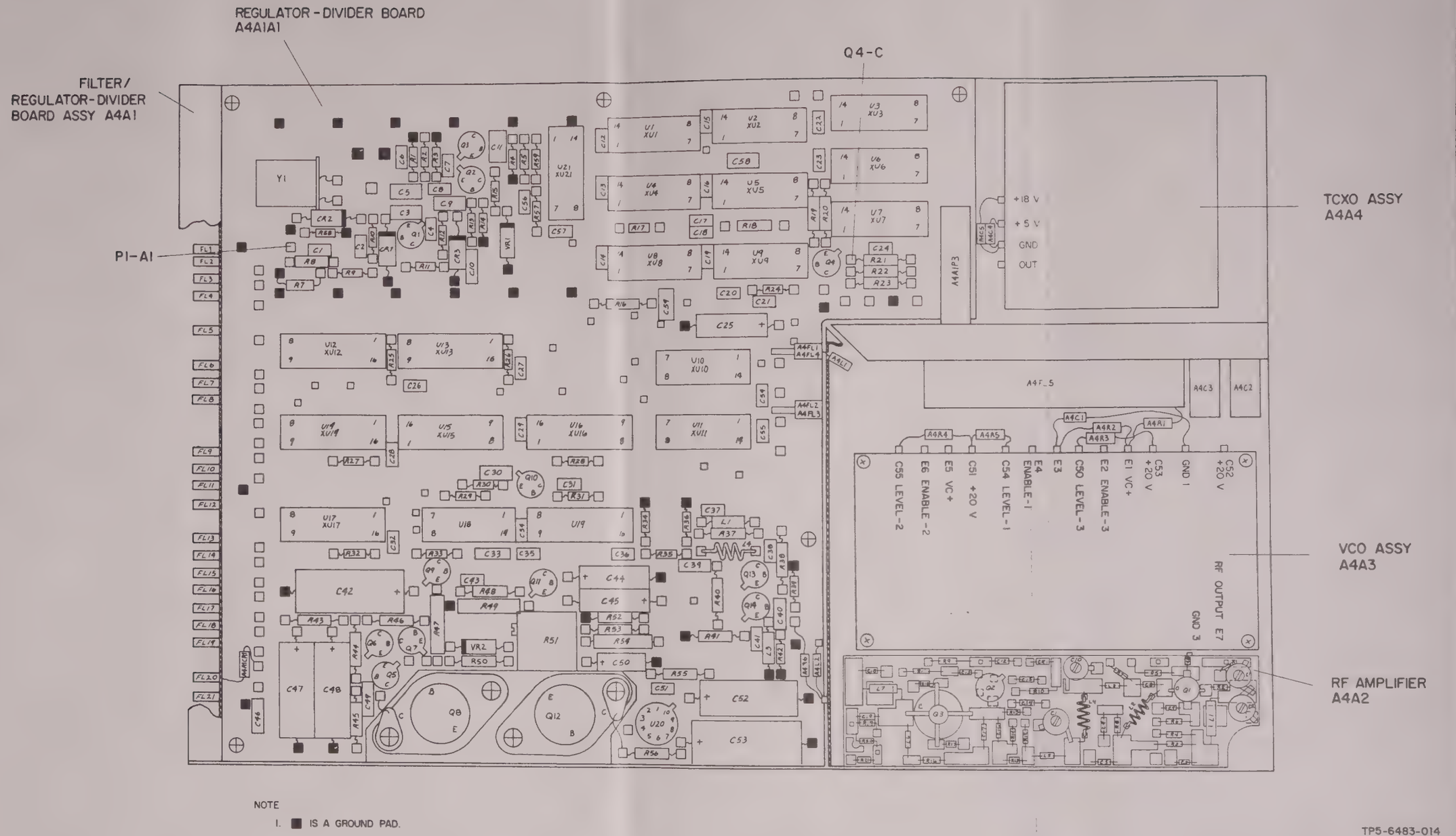

NOTE

1. ■ IS A GROUND PAD.

TP5-6483-014

Synthesizer Assembly A4 (With A4A2 CPN 634-9681-001)
Component Location
Figure 3-4A

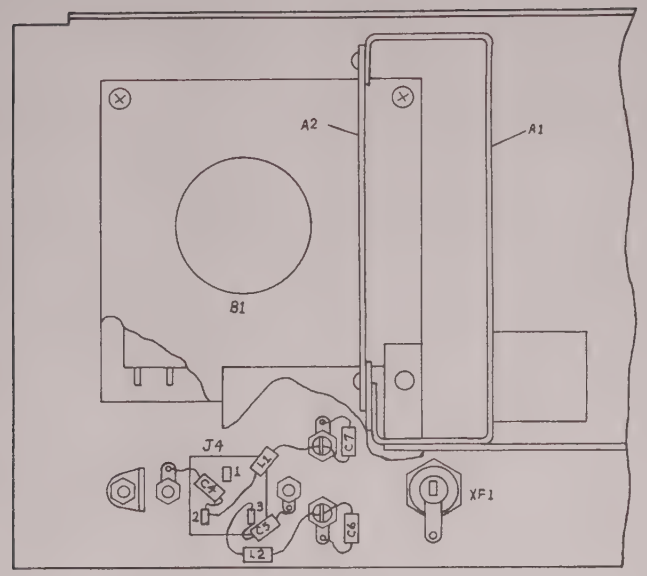

P/O A5

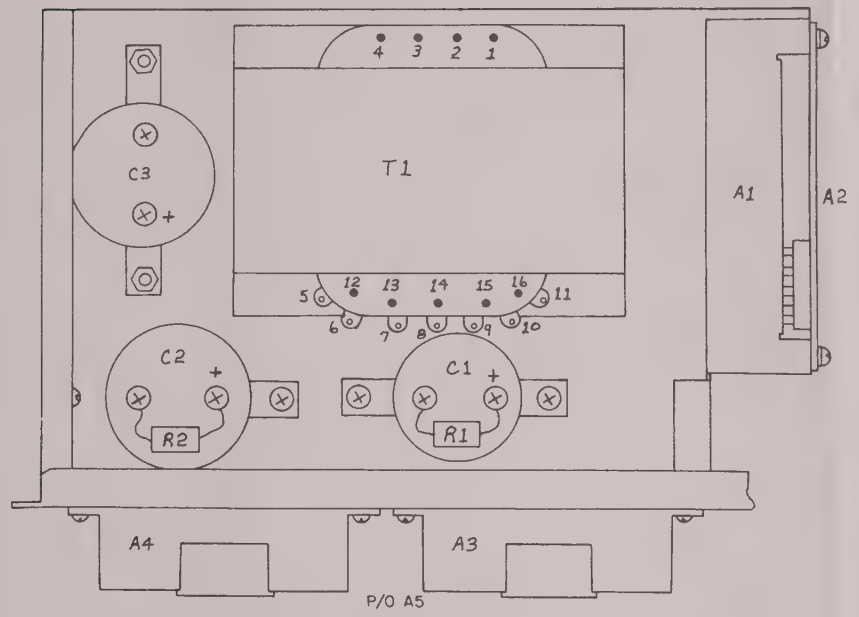

P/O A5

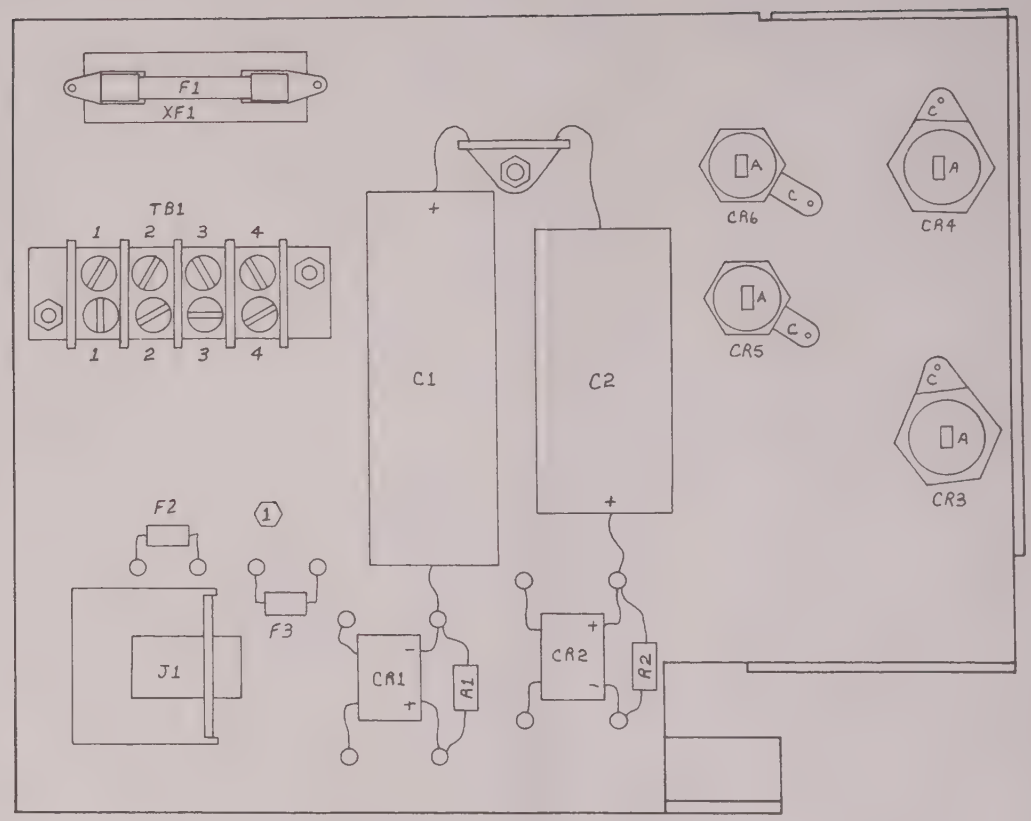

A5A1

(1) F2 AND F3 ONLY IN 479S-6A OR 479S-6 WITH SERVICE BULLETIN 1.

TP5-5218-013

Power Supply Assembly A5, Component Location
Figure 35

5.4.6 Remote Tune Assembly A8 Troubleshooting

Table 10 provides the troubleshooting procedures for remote tune assembly A8. Before starting the procedure, remove the A8 from the TI as described in paragraph 6.1.10. Install the extender card (2.28) and mount the A8 on the extender to gain access to the test points.

Before replacing any components on the module, check the printed circuit board and circuit board connector for damage. Refer to figure 36 for component locations.

5.4.7 Store/Recall Assembly A9 Troubleshooting

Before starting the procedure, remove the A9 board from the TI as described in paragraph 6.1.11. Install the extender card (2.28) and mount A9 on the extender to gain access to the test points.

Before replacing any components on the module, check the printed circuit board and circuit board connector for damage. Refer to figure 37 for component locations.

a. Connect oscilloscope (2.8) channel 1 input to U7-5 and channel 2 input to U7-9.
b. Press FUNCTION/CONTROL STO key. Press DATA ENTRY keys 0 and 1.
c. Observe oscilloscope channels 1 and 2 for the waveforms shown in figure 38A. Incorrect results: channels 1 and 2 do not go to logic 0, check U7; channels 1 and 2 do not go to logic 1, check U7-1 and U7-13 for logic 0.
d. Connect oscilloscope to U3-11 and observe a negative 0.5-μs pulse.
e. Connect oscilloscope to U8-4 and observe a negative 0.5-μs pulse.

5.4.8 IEEE-488/1978 Bus Interface Board A10 Troubleshooting

Before starting the procedure, remove the A10 board from the TI as described in paragraph 6.1.12. Install the extender card (2.28) and mount A10 on the extender to gain access to test points.

Note

Paragraph 5.4.8.1 provides troubleshooting instructions for A10 (CPN 601-5883-001). Paragraph 5.4.8.2 provides troubleshooting instructions for A10 (CPN 601-2309-001).

5.4.8.1 IEEE-488/1978 Bus Interface Board A10 (CPN 601-5883-001) Troubleshooting

Before replacing any components on the module, check the printed circuit board and circuit board connector for damage. Refer to figure 39 for component locations.

a. Connect oscilloscope (2.8) channel 1 input to U1-14 and channel 2 input to U11-6.
b. Address signal generator as a LISTEN device by sending ATN and device address via internal bus controller.

Table 10. Remote Tune Assembly A8 Troubleshooting Procedures.

MALFUNCTION	PROCEDURE	DESIRED RESULTS
No frequency or mode selects at any frequency	Check A8U1 and U2.	
No 0.01 MHz frequency selects	Check A8U9 and U10.	
No 0.1 MHz frequency selects	Check A8U3 and U4.	
No 1.0 MHz frequency selects	Check A8U7 and U8.	
No 10. MHz frequency selects	Check A8U5 and U6.	
No mode selects	Check A8U11 and U12.	

Table 10. Remote Tune Assembly A8 Troubleshooting Procedures (Cont).

MALFUNCTION	PROCEDURE		DESIRED RESULTS	
Any one frequency or mode select incorrect	Check for proper logic levels at device outputs listed below.			
	FREQ/MODE SELECT	RELAY CLOSED	LOGIC 0	LOGIC 1
	.005 MHz			
	B	K18	U10-8	U9-15
	C	K4	U4-8	U3-15
	.01 MHz			
	A	K17	U10-2	U9-2
	B	K19	U10-4	U9-5
	C	K20	U10-6	U9-7
	D	K21	U10-12	U9-10
	E	K22	U10-10	U9-12
	0.1 MHz			
	A	K1	U4-2	U3-2
	B	K2	U4-4	U3-5
	C	K3	U4-6	U3-7
	D	K5	U4-12	U3-10
	E	K6	U4-10	U3-12
	1.0 MHz			
	A	K14	U8-2	U7-2
	B	K13	U8-4	U7-5
	C	K12	U8-6	U7-7
	D	K16	U8-12	U7-10
	E	K15	U8-10	U7-12
	10 MHz			
	A	K10	U6-2	U5-2
	B	K11	U6-4	U5-5
	C	K9	U6-6	U5-7
	D	K7	U6-12	U5-10
	E	K8	U6-10	U5-12
	Mode Sel A	K26	U12-2	U11-2
	Nav Disable	K25	U12-4	U11-5
	LOC/GS Energize	K27	U12-6	U11-7
	Mode Sel B	K24	U12-12	U11-10
	Com Dis	K23	U12-10	U11-12

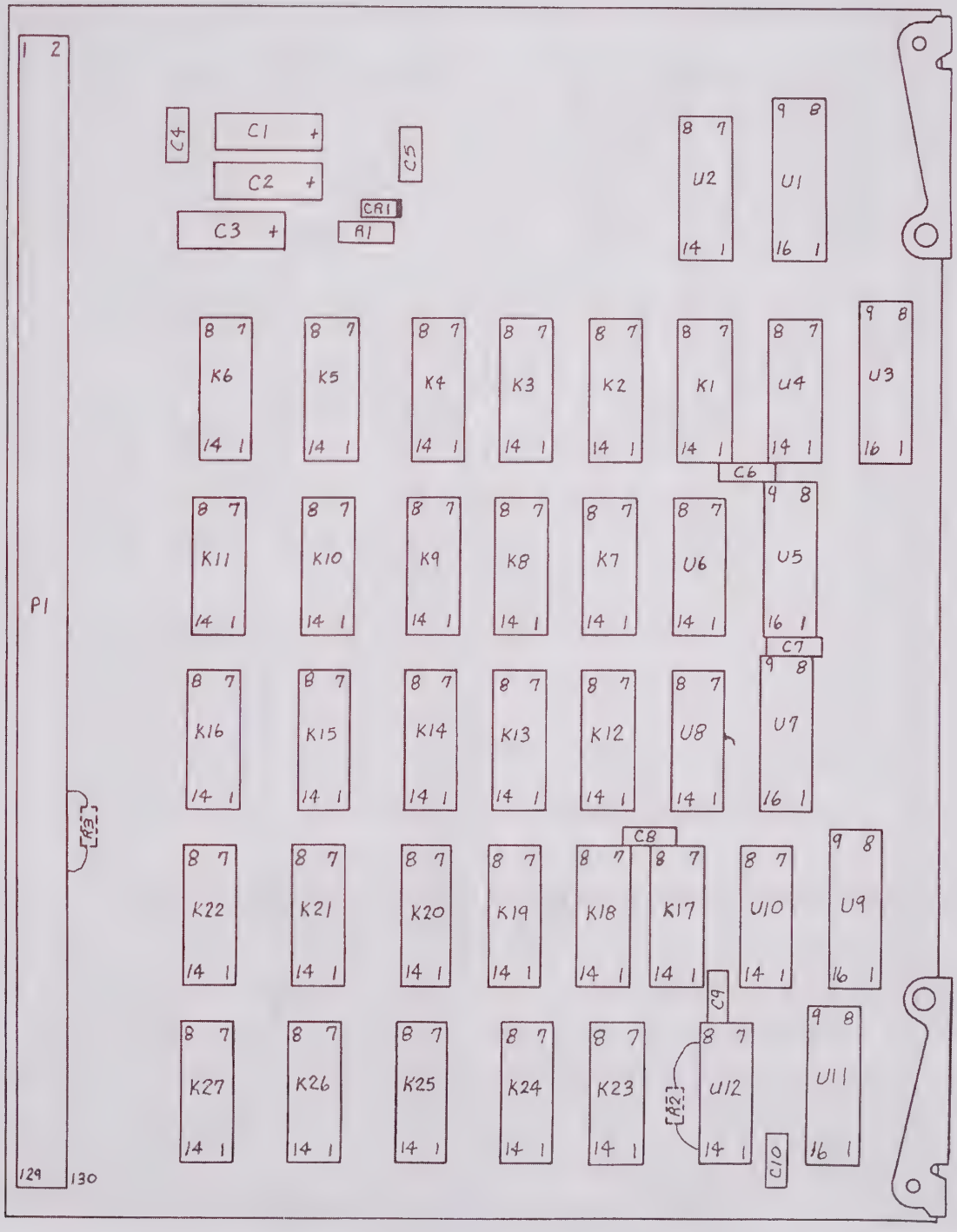

Remote Tune AS, Component Location
Figure 36

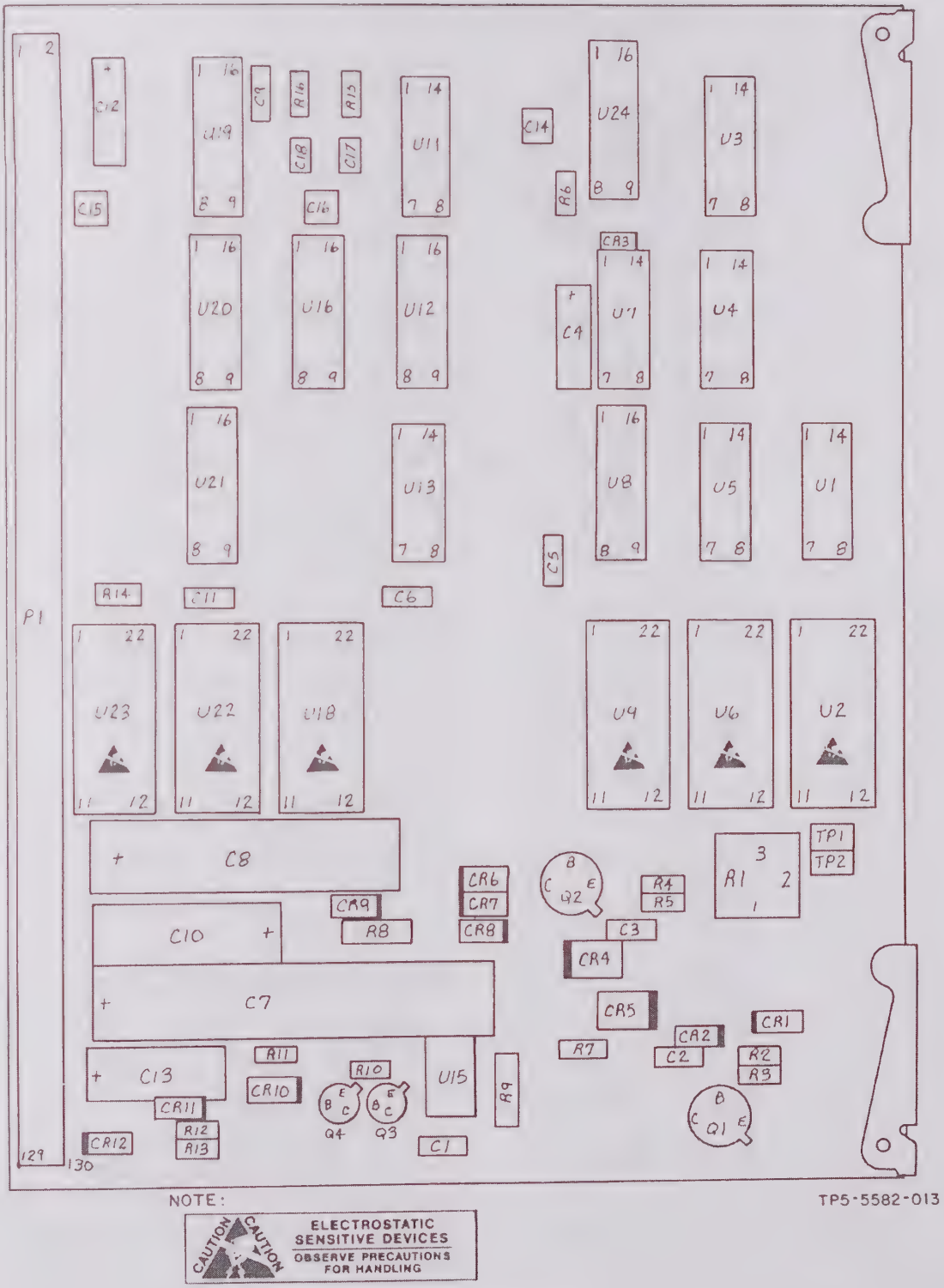

Store/Recall A9, Component Location
Figure 37

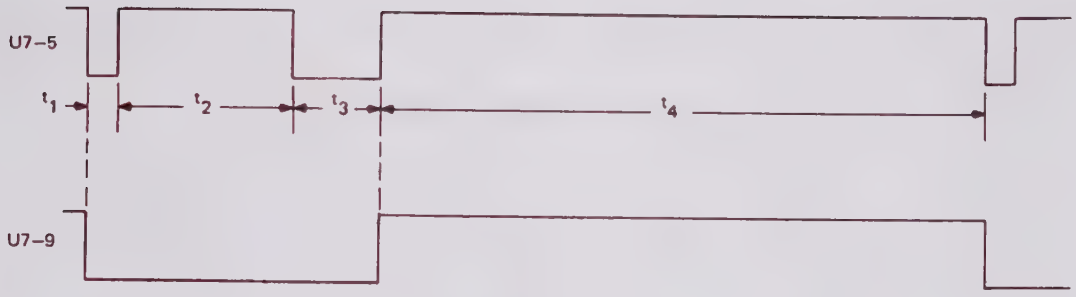

$t_1 \approx$ 15 us
$t_2 \approx$ 1.5 ms
$t_3 \approx$ JITTER BETWEEN .2 AND .4 ms
$t_4 \approx$ 14 ms

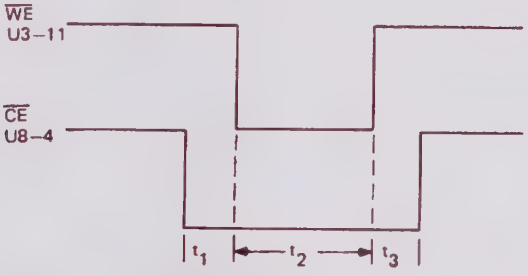

t_1 = PROPOGATION DELAY OF 74LS00 AND 74LS20
t_2 = PROPOGATION DELAY OF 74LS139
$t_3 \approx$ .5 us

NOTE: WAVEFORMS ARE NOT DRAWN TO SCALE.

TP5–5647–011

Store/Recall A9, Waveforms
Figure 38

c. Observe a logic 1 pulse on oscilloscope channel 1 followed by a logic 0, $\overline{NMI}$, pulse on channel 2. Incorrect results: no pulse on channel 1, verify A10S1 switch positions described in the operation section; no pulse on channel 2, verify U11-5 at logic 1 level after power-up.
d. Verify input/output signals by connecting oscilloscope channel 1 to input and channel 2 to output of bus transceivers U13, U14, U15, U16. Observe a corresponding change on each channel for any control or data signal.

5.4.8.2 IEEE-488/1978 Bus Interface Board A10 (CPN 601-2309-001) Troubleshooting

Before replacing any components on the module, check the printed circuit board and circuit board connector for damage. Refer to figure 39A for component locations.

a. Connect oscilloscope to U8-6 and observe a 2-MHz square wave.
b. Connect the HP-9825A controller to the 479S-6A IEEE-488 connector at rear of unit. Set controller to repeat the following sequence: LA,"@", CR, LF where "LA" is the listen address of the signal generator.
c. Observe U3-11 to be a logic 0 when the controller is inactive, and, to be changing states when the controller is executing the sequence in step b.
d. Observe U9-8 to be a logic 1 (NMI) when the controller is inactive, and, to be changing states when the controller is executing the sequence in step b.
e. While the controller is executing step b, observe all CPU data, address, and control lines to be changing states. Also observe all GBIP bus lines to be changing states except IFC, REN, SRQ, and EOI.

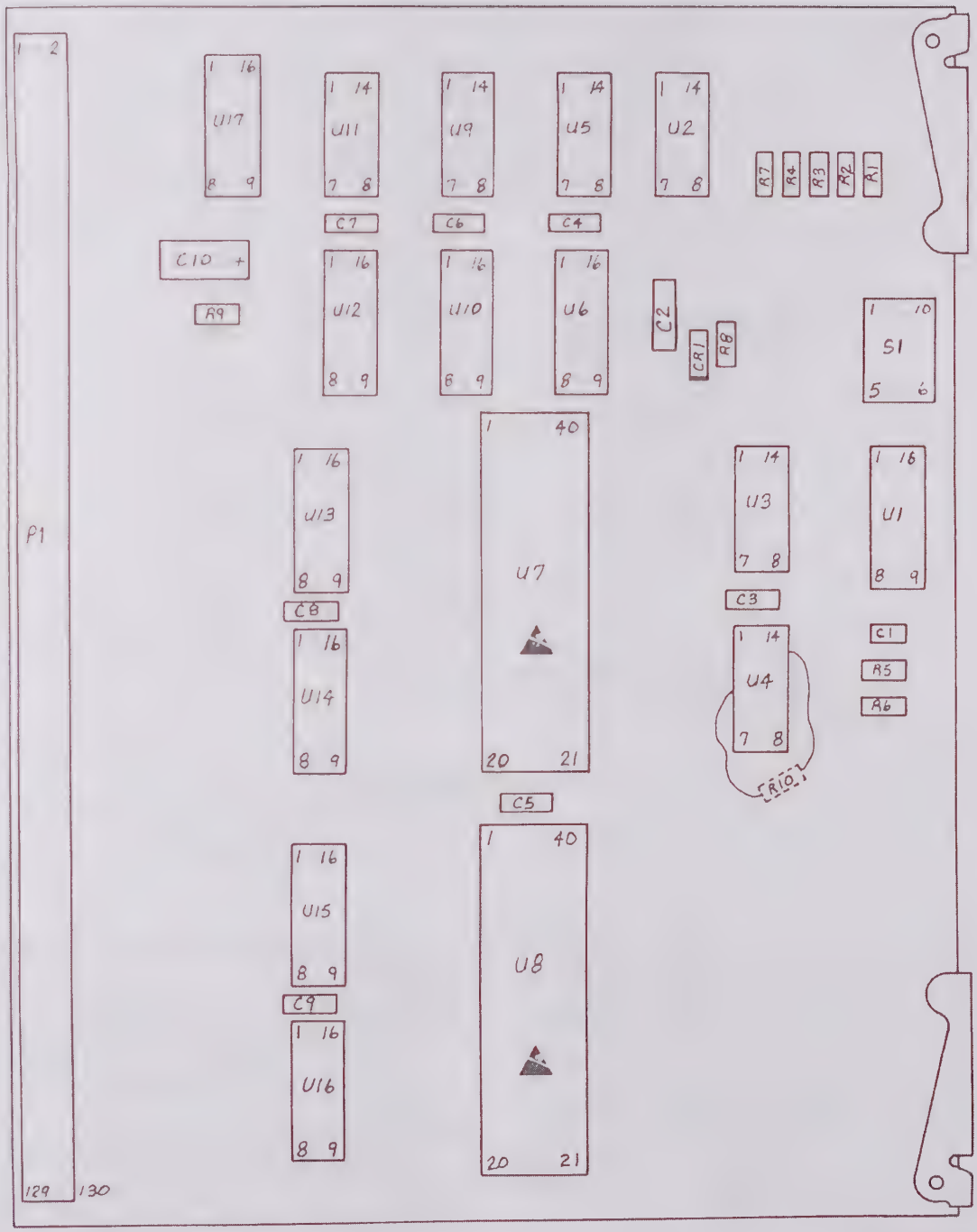

TP5-5581-013

NOTE:

IEEE-488/1978 I-O Card A10 (CPN 601-5883-001), Component Location
Figure 39

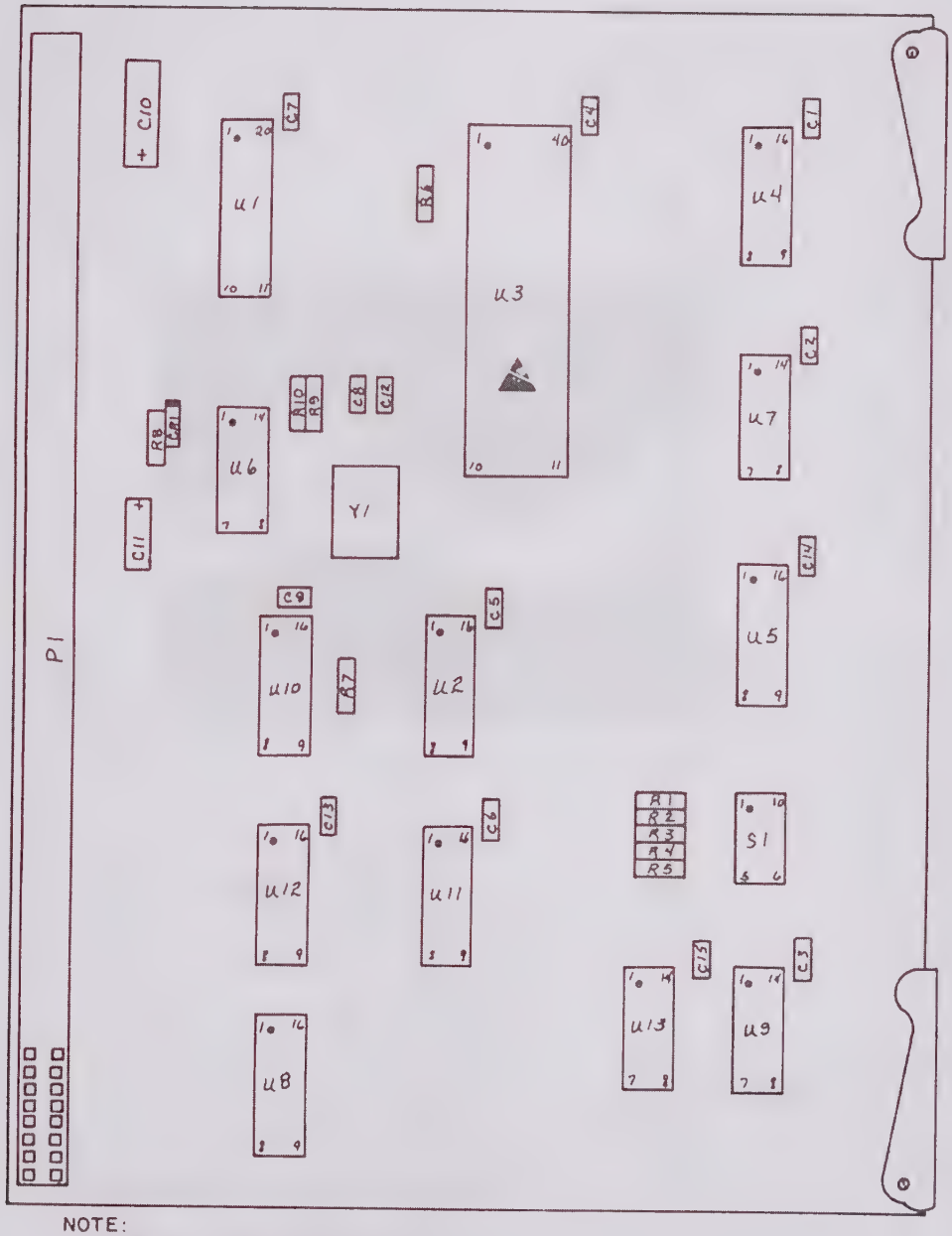

NOTE:

CAUTION CAUTION
ELECTROSTATIC SENSITIVE DEVICES
OBSERVE PRECAUTIONS FOR HANDLING

TP5-6608-019

IEEE-488/1978 I-O Card A10 (CPN 601-2309-001), Component Location
Figure 39A

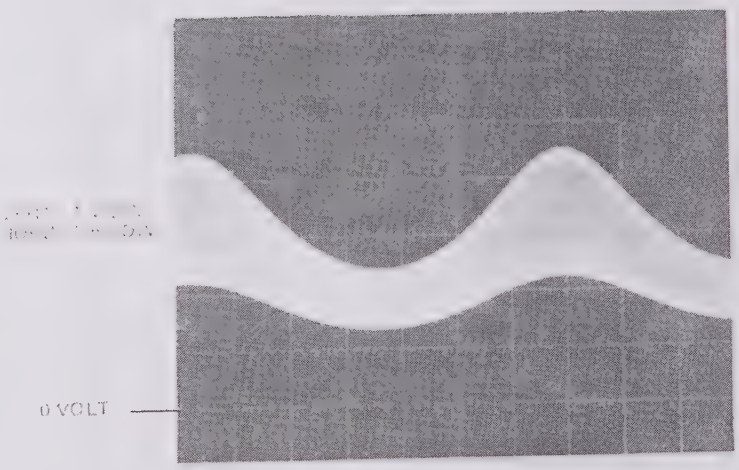

TP5-5382-017

A3A2 TP1 Waveform
Figure 40

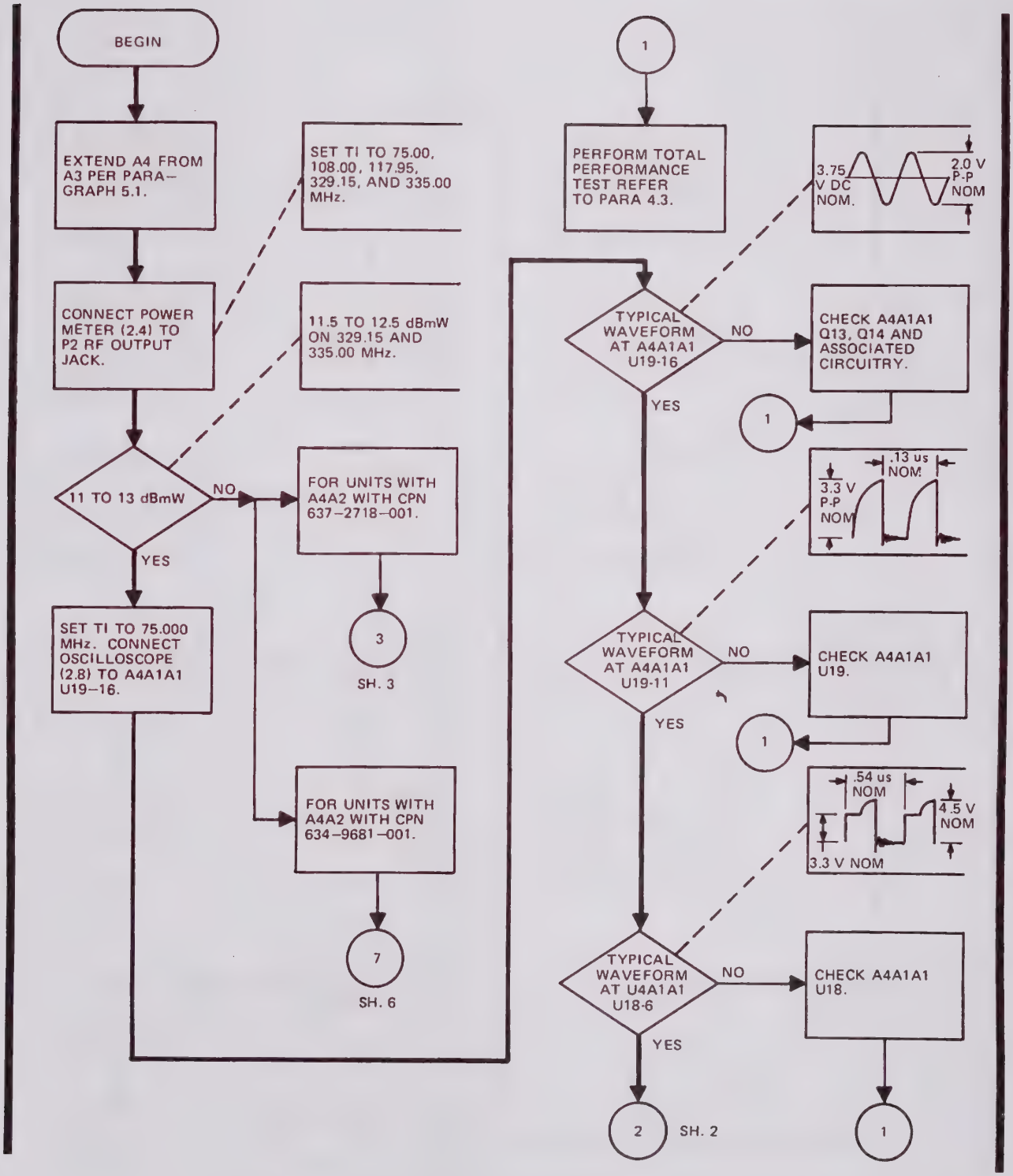

Synthesizer Assembly A4, Troubleshooting Procedures
Figure 41 (Sheet 1 of 7)

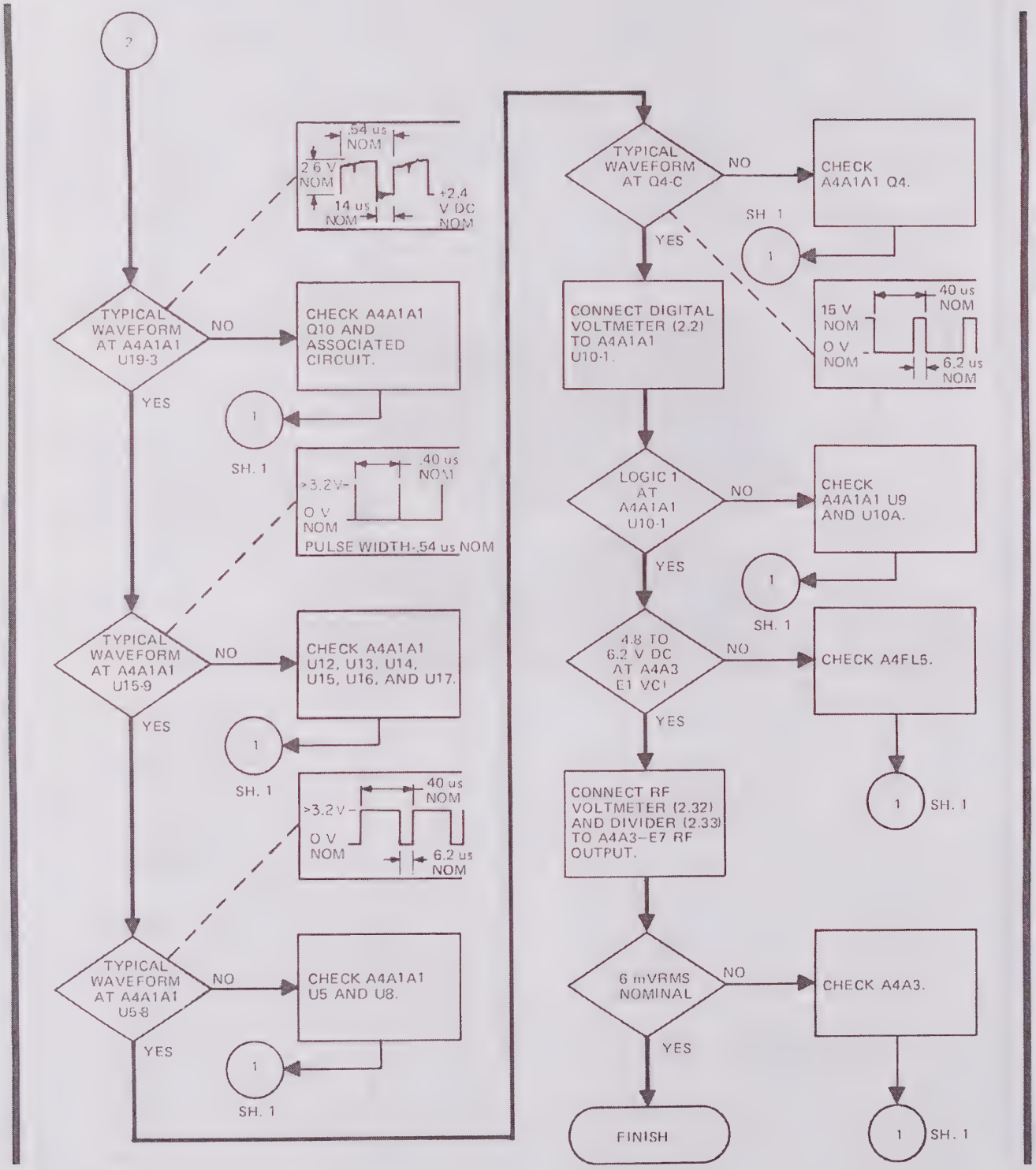

Synthesizer Assembly A4, Troubleshooting Procedures
Figure 4-1 (Sheet 2)

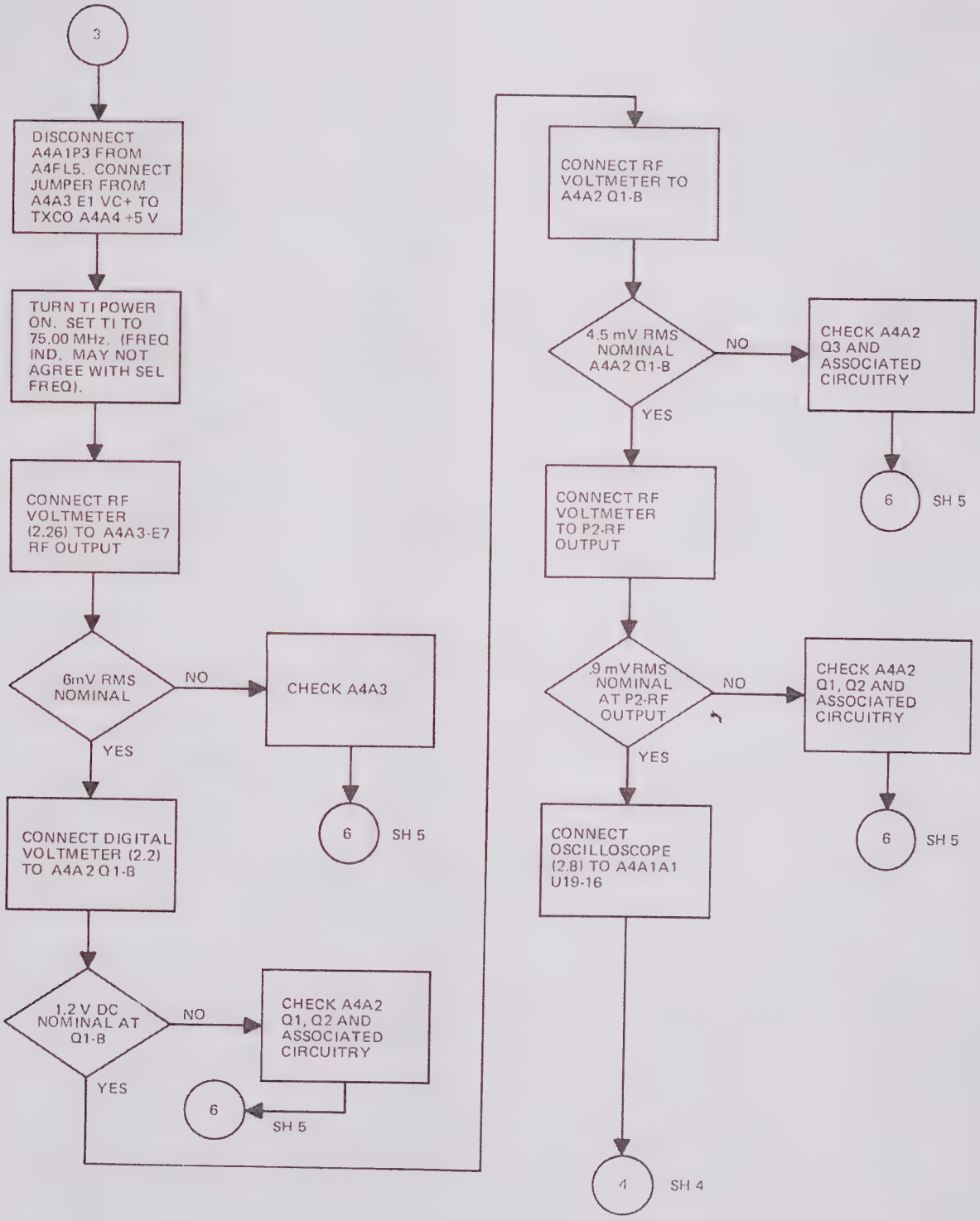

Synthesizer Assembly A4, Troubleshooting Procedures
Figure 4-1 (Sheet 3)

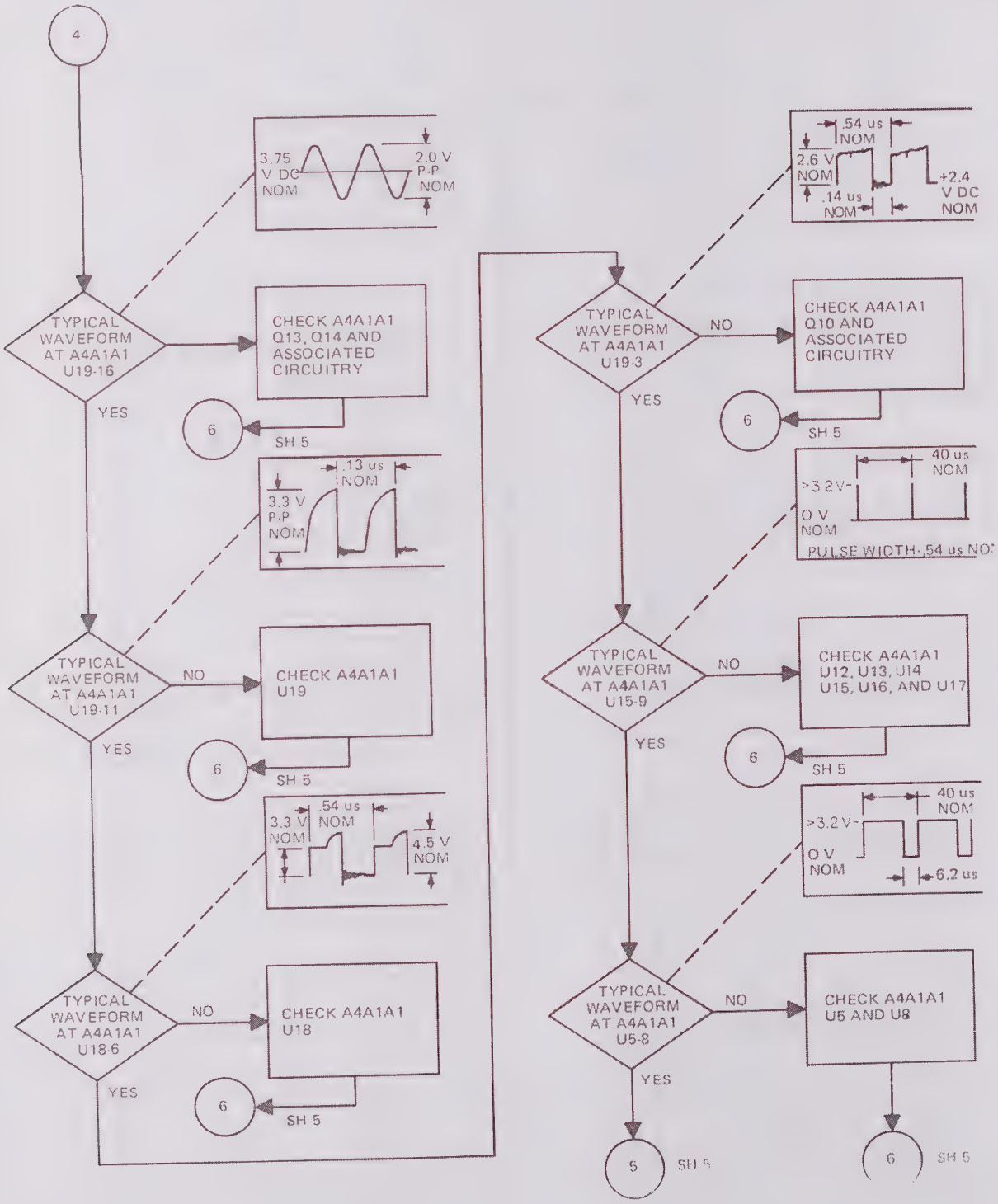

Synthesizer Assembly A4, Troubleshooting Procedures
Figure 4-1 (Sheet 4)

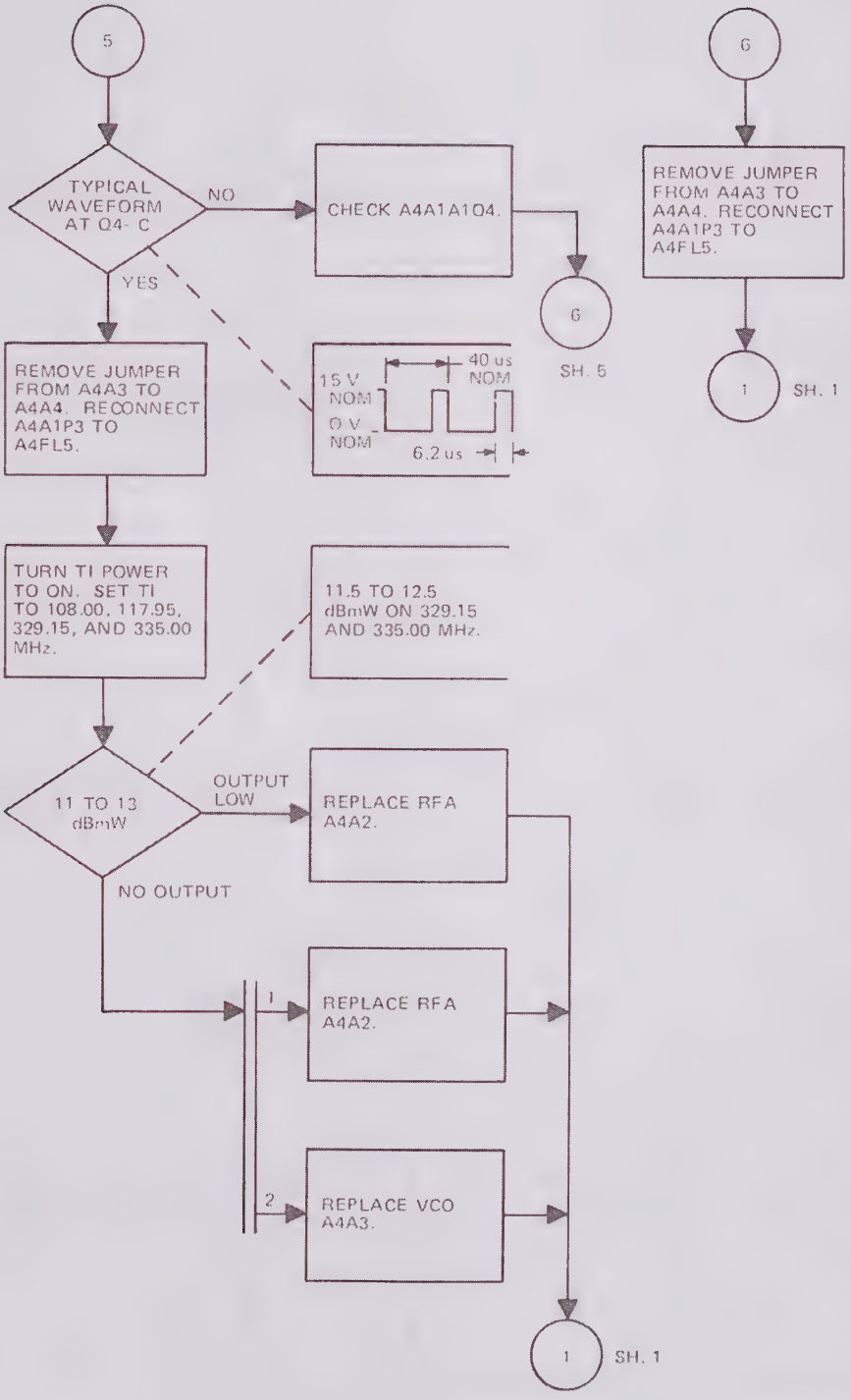

Synthesizer Assembly A4, Troubleshooting Procedure - Figure 4-1 (Sheet 5)

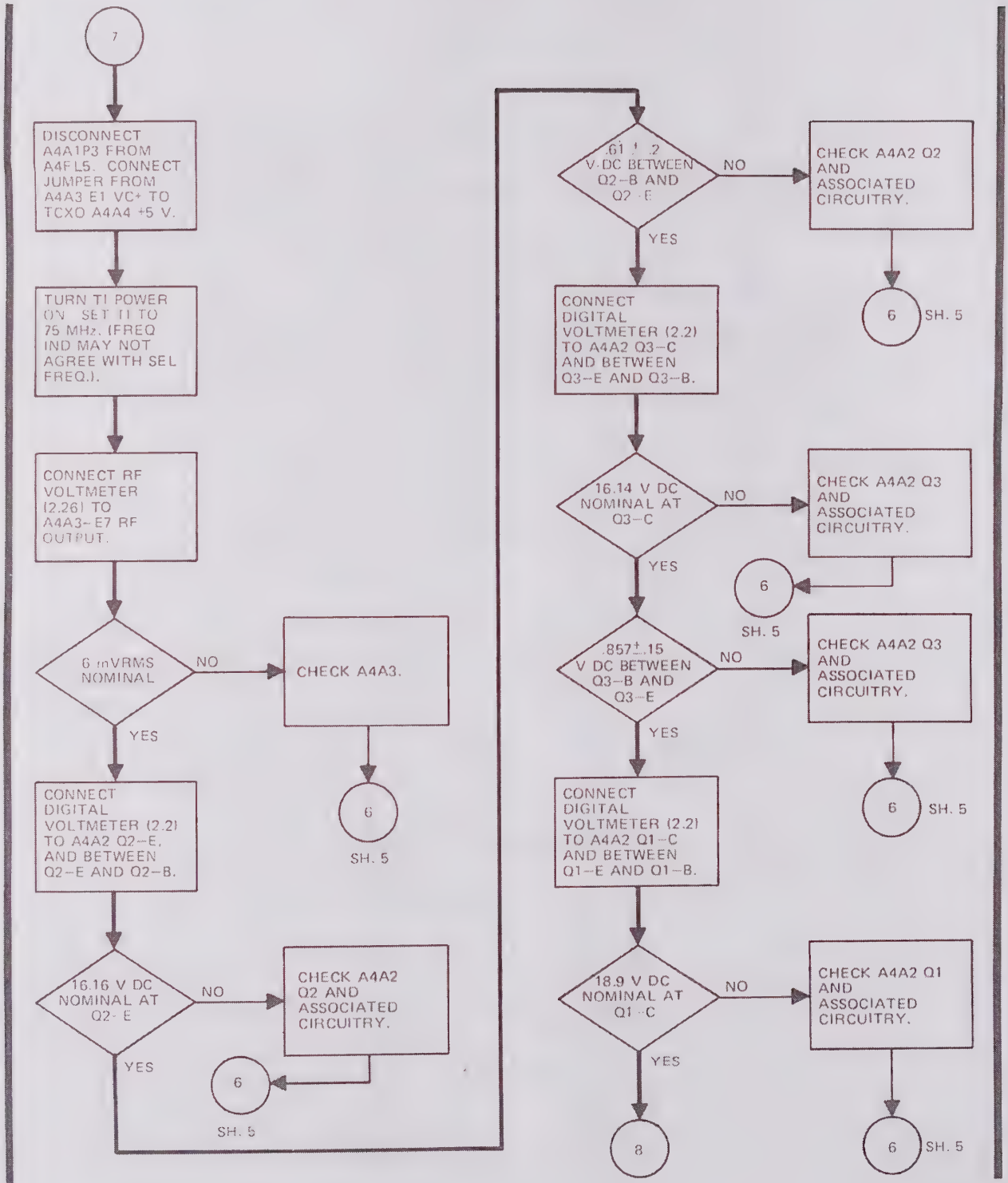

Synthesizer Assembly A4, Troubleshooting Procedures
Figure 4-1 (Sheet 6)

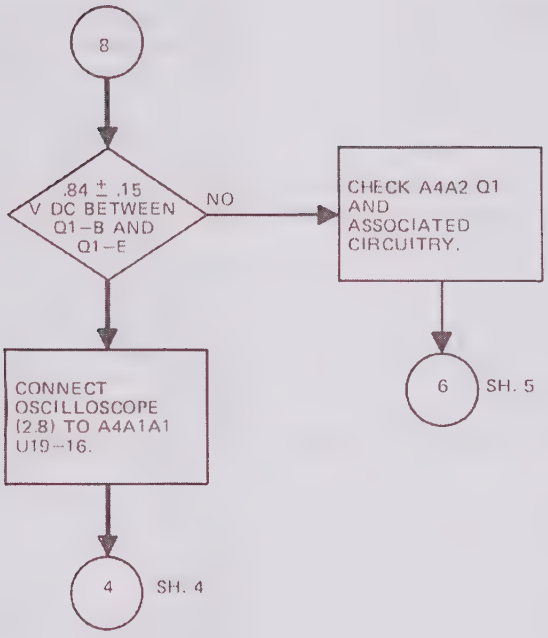

Synthesizer Assembly A4, Troubleshooting Procedures
Figure 4-1 (Sheet 7)

6. DISASSEMBLY/ASSEMBLY

6.1 Disassembly

6.1.1 General

The disassembly procedures provide instructions for removal and disassembly of the circuit card and module subassemblies in the signal generator.

6.1.2 Precautions and General Techniques

a. Always remove power cable from power source before removing or disassembling any circuit card or module assembly.
b. Mark or otherwise identify all disconnected wires and/or cables.
c. Note color coding, placement, and methods of insulation installation (if used) on all wires, cables, and/or components before unsoldering or removing.
d. To prevent pin damage, always pull printed circuit board connectors straight out until pins clear mating connector.
e. To prevent damage to the circuit card pads due to cable torque, unsolder coaxial cable connections from circuit card assembly before removing cable clamp.
f. CPU assembly A2A1, analog board A2A2, TDM board A2A3, demod/ALC assembly A3A2, store recall assembly A9, and IEEE-488/1975 I/O assembly A10 contain MOS devices that can be damaged by static voltages present in most repair facilities. Although most MOS devices contain internal gate protection circuits, good practice dictates careful handling of assemblies containing MOS devices and the following precautions should be observed:
    1. Deenergize or disconnect all power, signal sources, and loads used with the signal generator.
    2. Place the signal generator on grounded conductive work surface.
    3. Ground the repair operator through a conductive wrist strap or other device using a 1-MΩ series resistor to protect the operator. No two objects, including fingers, workbench, test equipment, and tools, shall simultaneously contact an MOS assembly unless the two objects have first been placed in electrical contact with one another. The electrical contact shall have a path resistance of 1 MΩ or less and shall have been maintained for at least several seconds when the second object contacts the MOS assembly.
    4. Ground any tools (including soldering equipment) that will contact the unit. Contact with the operator's hand provides a sufficient ground for tools that are otherwise electrically isolated.
    5. When MOS assemblies are removed from the signal generator, they should be placed on the conductive work surface or in conductive containers. When an MOS assembly is inserted in or removed from a container, the repair operator should maintain contact with the conductive portion of the container.
    6. When not being worked on, wrap disconnected circuit boards in aluminum foil or in plastic bags that have been coated or impregnated with conductive material.
    7. Do not handle MOS assemblies unnecessarily or remove from their packages until actually used or tested.

Failure to observe all of the MOS assembly precautions can cause permanent damage to the MOS devices. This damage can cause the devices to fail immediately or at a later date when exposed to an adverse environment.

Note

Refer to figure 2 in the description section for subassembly locations.

6.1.3 Removal of Cover

a. Stand signal generator on its handles and remove four screws from sides of cover (two screws on each side located toward front of signal generator).
b. Remove six screws securing cover to bottom of signal generator (three on each side), and remove cover.

6.1.4 Removal and Disassembly of Front Panel Assembly A1

Note

Perform step a only if lens switch or light bulb must be replaced.

a. Remove front panel lens switch and light bulbs as follows:
    1. Remove key cap with extraction tool (item 2.29 in table 1).
    2. Remove light bulb behind lens switch by pulling light bulb straight out with tweezers.

b. Remove four screws and four flat washers (two screws and two flat washers on each side of signal generator located behind the bracket that is behind handles). Refer to figure 42.
c. Carefully pull front panel assembly A1 from chassis far enough to gain access to wiring harness mating connectors P6 and J4. Use care when removing front panel assembly A1 so as not to damage the RF OUT coax connector.
d. Disconnect the wiring harness mating connectors (printed circuit board connector P6 and white translucent connector J4) from front panel assembly A1.
e. Disassemble front panel assembly A1 as follows:
   1. Lay front panel assembly A1 on its handles. Refer to figure 43. Unsolder and tag the two wires from SELF TEST switch to keyboard driver board A1A1.
   2. Remove eight screws securing A1A1 (one screw in each of six corners, one in top middle of board, and one in bottom middle of board).
   3. Lift A1A1 with attached display board A1A2 from front panel assembly A1.
   4. Remove three screws securing A1A2 to A1A1.

Caution

Use extreme care when disconnecting A1A2 from A1A1 so as not to break A1A2.

   5. Carefully remove A1A2 from the mating connector pins on A1A1.

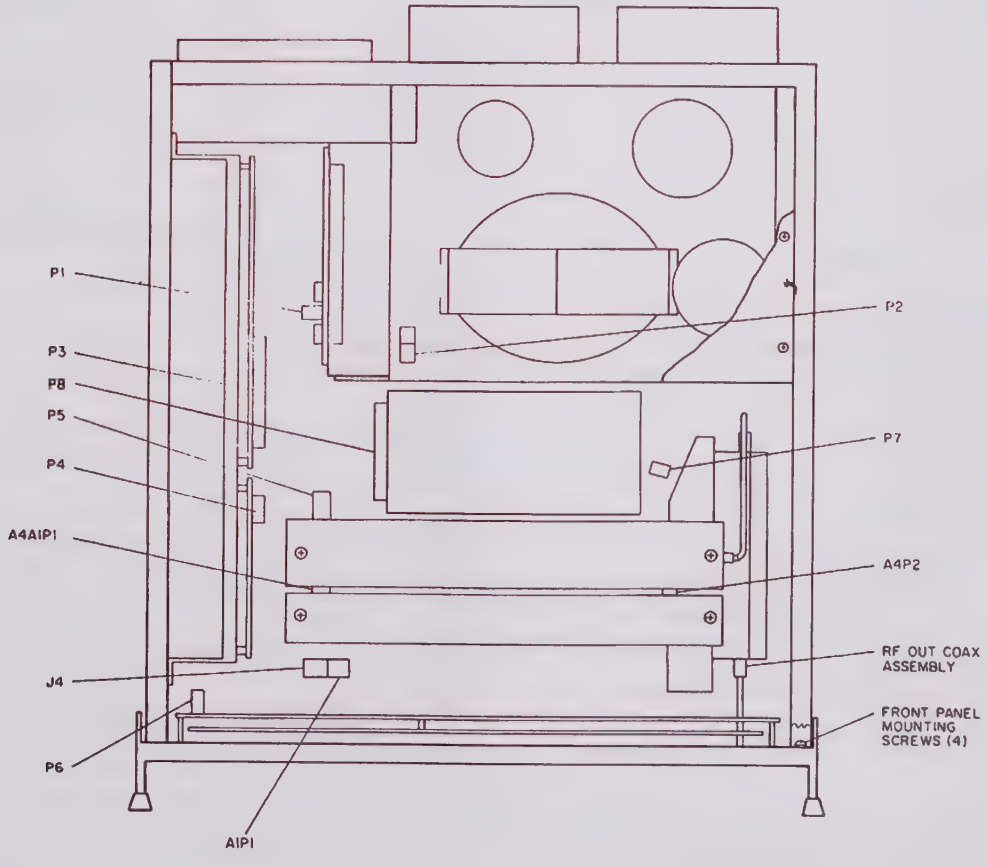

479S-6A Top View, Dust Cover Removed
Figure 42

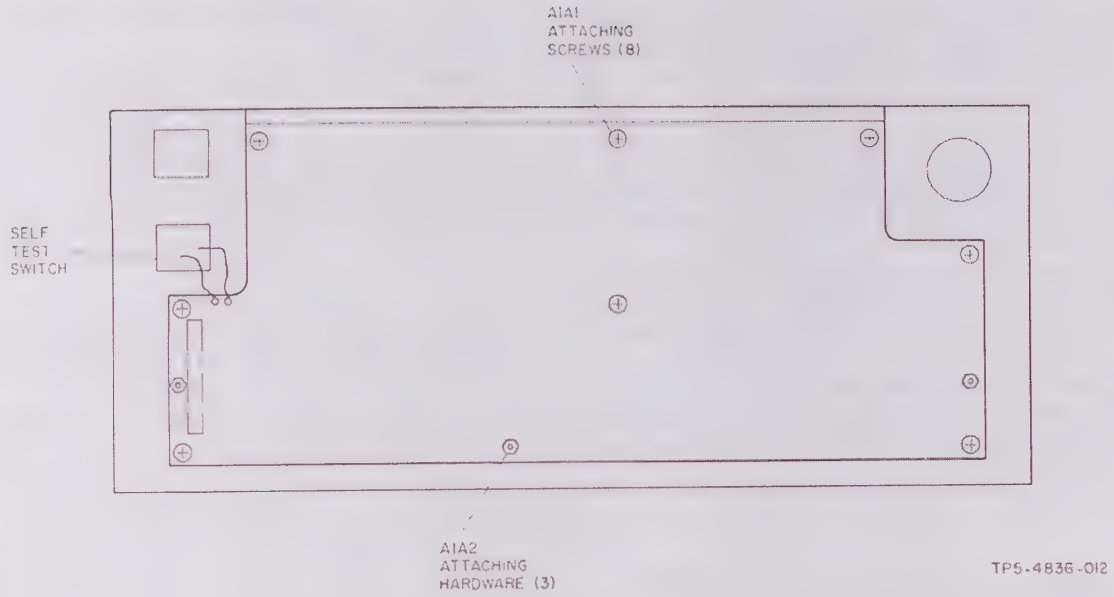

Rear View of Front Panel Assembly A1
Figure 43

6.1.5 Removal and Disassembly of Controller/ Audio Assembly A2

Caution

The following devices in assembly A2 are electrostatic sensitive and require special handling as described in Collins document 523-0763405, Repair Instructions for Planar Assemblies and Cables.

CIRCUIT CARD	REFERENCE DESIGNATOR
A2A1	U1, U2, U4, U11, U12, U17, U18, U19, U20, U25 and U26
A2A2	U2, U3, U5, U10, U18, and U22
A2A3	U12, U70, U71, U92, U95, and U118

a. Remove module bracket from rf modulator assembly A3 and synthesizer assembly A4 according to the following steps. Refer to figure 44.
   1. Remove four screws securing module bracket to top of A3 and A4.
   2. Remove four screws (two at each end) securing module bracket to chassis, and remove module bracket.

b. Loosen four captive fasteners securing A2 to chassis.
c. Carefully pull A2, with its mounting bracket assembly and chassis wiring harness assembly, up from chassis.
d. Disconnect two printed circuit board connectors, P3 and P4, from A2. Refer to figure 42.
e. Remove four screws securing CPU assembly A2A1 to hex posts on mounting bracket assembly A2. Refer to figure 44.
f. Carefully list A2A1 from mating pinfield on TDM board A2A3.
g. Remove two screws with washers and two nuts with washers securing analog board A2A2 to hex-posts on mounting bracket assembly A2.
h. Carefully lift A2A2 from mating pinfield on A2A3.
i. Remove six screws securing A2A3 to standoff posts on mounting bracket assembly A2, and remove A2A3 from mounting bracket assembly.

6.1.6 Removal and Disassembly of RF Modulator Assembly A3

Caution

The following devices on assembly A3 are electrostatic sensitive and require special handling as described in Collins document 523-0763405, Repair Instructions for Planar Assemblies and Cables.

CIRCUIT CARD	REFERENCE DESIGNATOR
A3A2	U4 and U13

a. Remove module bracket from rf modulator assembly A3 and synthesizer assembly A4 according to the following steps. Refer to figure 44.
   1. Remove four screws securing module bracket to top of A3 and A4.
   2. Remove four screws (two at each end) securing module bracket to chassis, and remove module bracket.

b. Disconnect coax connector from side of A3 (coax is from attenuator A6AT1, PO A6). Refer to figure 45.

c. Disconnect P5 from rear of A3. Refer to figure 42.

d. Lift assemblies A3 and A4 from chassis.

e. Remove two large screws, two lockwashers, and two flat washers from opposite corners of A4. Screws are used to secure A4 to A3. Refer to figure 45.

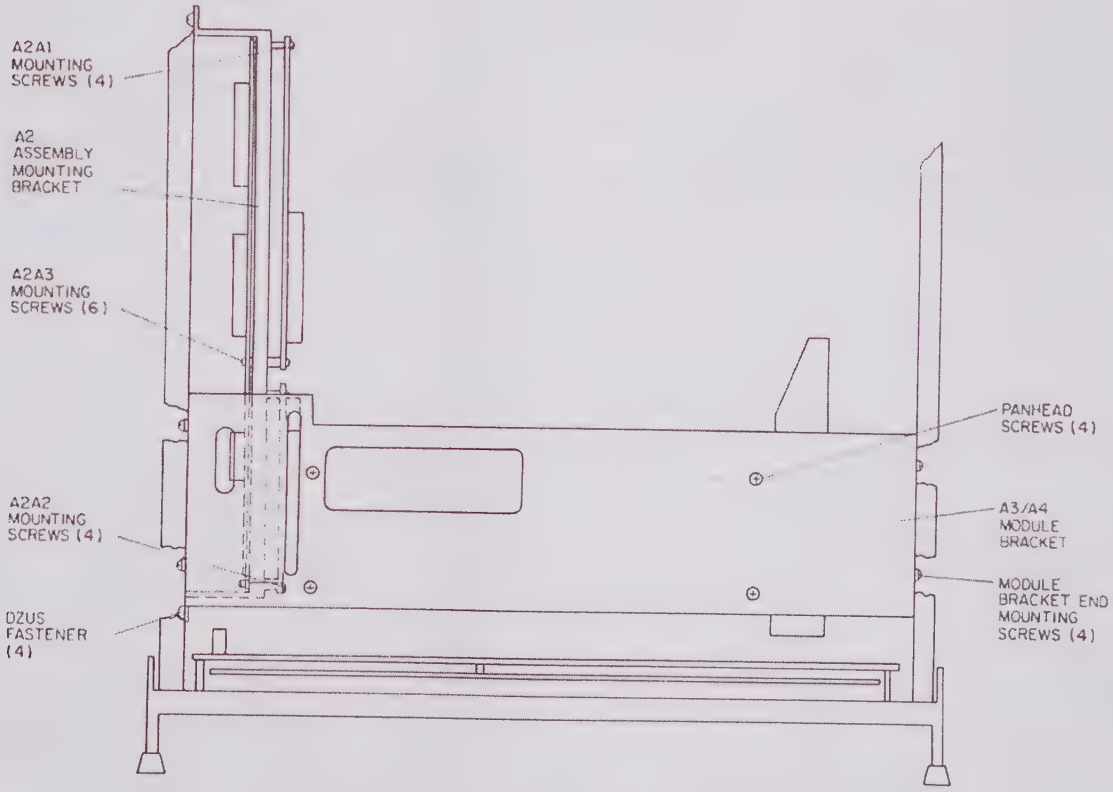

Controller/Audio Assembly A2, Disassembly
Figure 71

f. A3 and A4 are held together with two guide pins, one coax connector, and one rack and panel connector. Carefully pull the two assemblies apart.
g. Disassemble A3 according to the following steps. Refer to figure 46.
   1. Remove cover from assembly A3.
   2. Remove four screws and four flat washers securing counter-I/O board A3A3.
   3. Carefully lift A3A3 from A3 chassis to gain access to coax connectors.
   4. Disconnect ribbon cable connector A3W1P1 from A3A3, coax connector A3A3W3P1 on cable from A3A3 to rf strip-line assembly A3A1, and coax connector A3A1W2P1 from A3A3J2. Remove A3A3.
   5. Remove two screws and two lockwashers securing connector A3A2J1 to back of A3 chassis (screws are on same side of A3 as guide pins).
   6. Disconnect A3A1W1P1 (on cable assembly from A3A1) from A3A2 and remove A3A2 from A3 chassis.
   7. Remove 14 screws and 1 flat washer securing cover on A3A1 and remove cover.
   8. Remove four screws and four washers securing A3A1 to A3 chassis, and remove A3A1.

6.1.7 Removal and Disassembly of Synthesizer Assembly A4

a. Remove module bracket from rf modulator assembly A3 and synthesizer assembly A4 according to the following steps. Refer to figure 44.
   1. Remove four screws securing module bracket to top of A3 and A4.
   2. Remove four screws (two at each end) securing module bracket to chassis, and remove module bracket.
b. Disconnect coax connector from side of A3 (coax is from attenuator A6AT1, P/O A6). Refer to figure 45.
c. Disconnect connector P5 from rear of A3. Refer to figure 42.
d. Lift assemblies A3 and A4 from the chassis.
e. Remove two large screws, two lockwashers, and two flat washers from opposite corners of A4. Refer to figure 45. Screws are used to secure A4 to A3.
f. A3 and A4 are held together with two guide pins, one coax connector, and one rack and panel connector. Carefully pull the two assemblies apart.
g. Remove eight screws and eight lockwashers, and remove A4 cover.

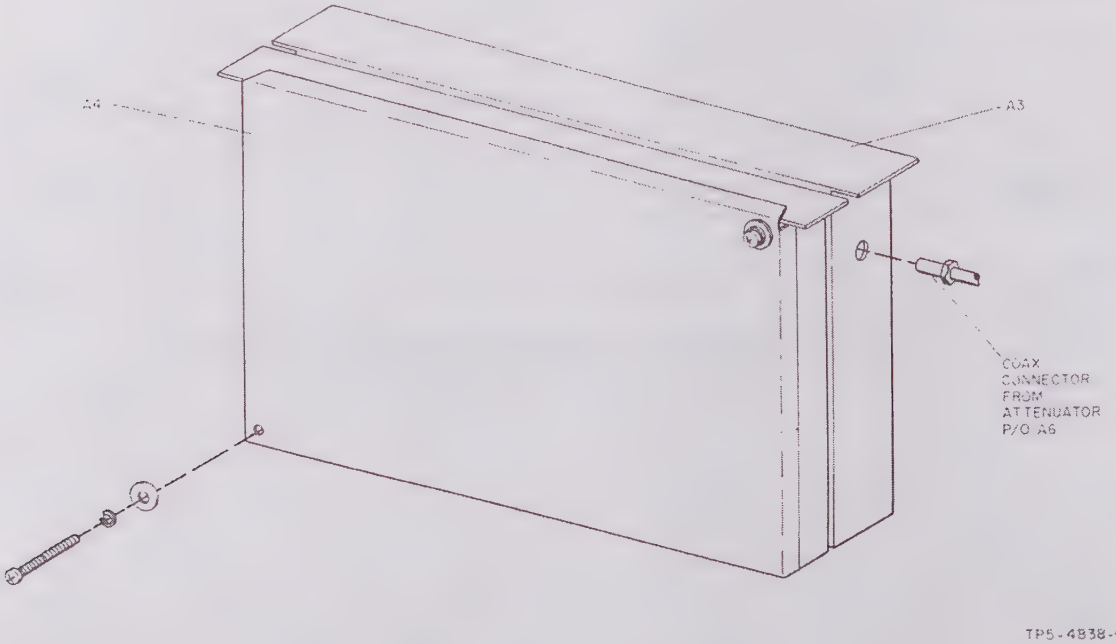

Removal of A3 and A4 Subassemblies
Figure 45

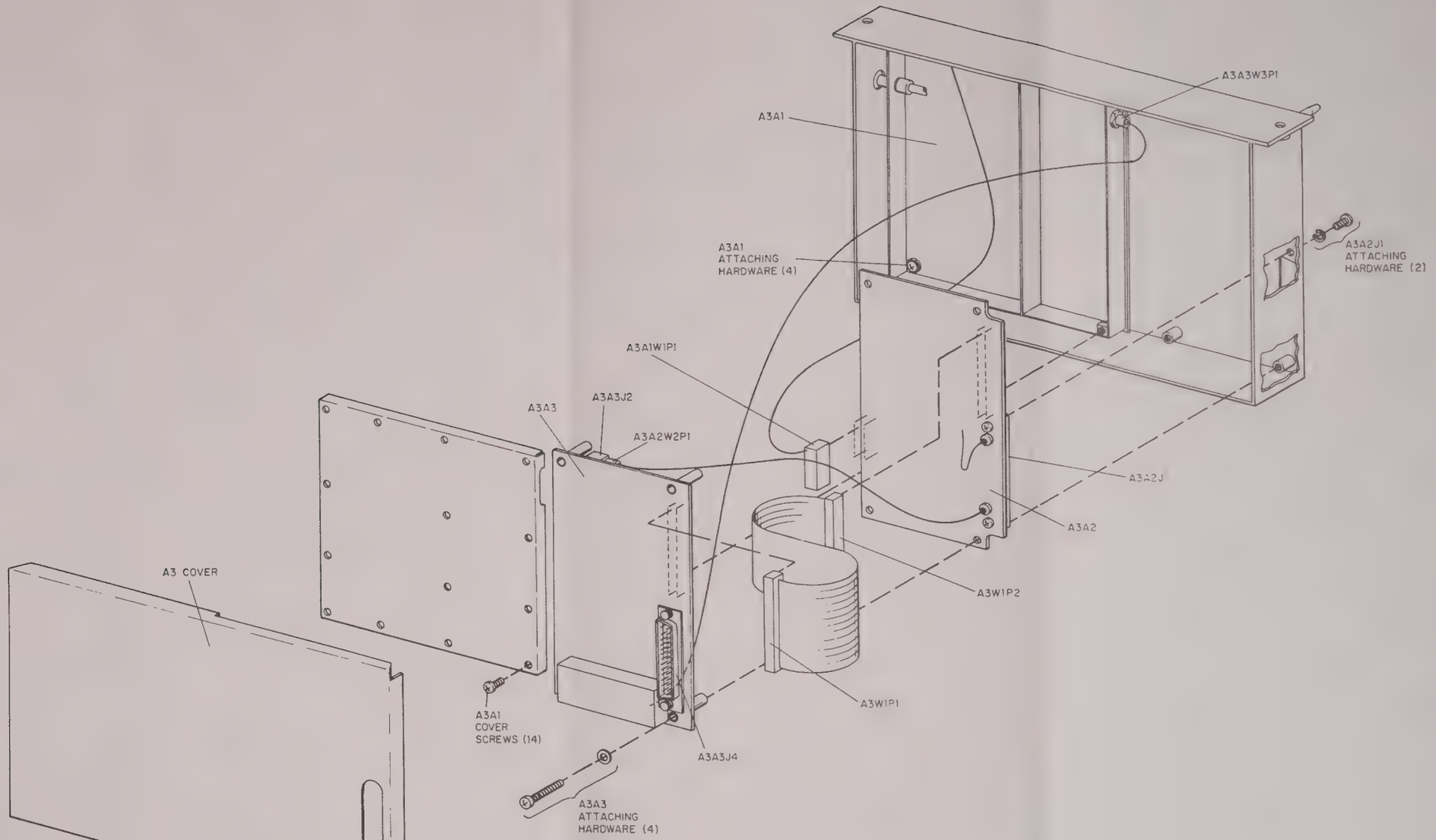

TP5-4839-013

RF Modulator Assembly A3, Disassembly
Figure 46

h. Remove regulator/divider/filter assembly A4A1 according to the following steps. Refer to figure 47.
   1. Remove six screws, six flat washers, and six lockwashers securing regulator/divider board A4A1A1 to A4 chassis.
   2. Remove three screws securing transistor mounting bracket on A4A1A1 to side of A4 chassis.
   3. Remove three screws securing bracket to A4 chassis (one screw at each end of bracket and one screw on bottom of A4 chassis near connector A4A1P1).
   4. Remove two screws and associated hardware securing connector A4A1P1 to rear of A4 chassis.
   5. Disconnect coax connector A4A1P3 from filter FL5 next to vco assembly A4A3.
   6. Unsolder and tag wires from enclosed area containing vco assembly A4A3 and output amplifier board A4A2.
   7. Unsolder and tag wires from TCXO assembly A4A4, or remove its attaching hardware, four screws, and four lockwashers.
   8. Remove A4A1 from A4 chassis.

i. Remove output amplifier board A4A2 as follows:
   1. Remove three nuts, three flat washers, three lockwashers, and three screws securing A4A2 to A4 chassis.
   2. Unsolder and tag connections to A4A2.
   3. Remove connector adapter and spring washer from coax connector on back side of A4 chassis, and remove A4A2.

j. Remove vco assembly A4A3 and filter FL5 as follows:
   1. Remove four screws and four lockwashers securing TCXO assembly A4A4, and remove from A4 chassis.
   2. Remove two screws, two nuts, two lockwashers, two flat washers, and two ground lugs securing filter FL5.
   3. Disconnect coax connector A4A1P3 from filter FL5.
   4. Remove four screws and four lockwashers (on back of A4) securing A4A3.
   5. Unsolder and tag wires, and remove FL5 and A4A3.

k. Remove TCXO assembly A4A4 as follows:
   1. Remove four screws and four lockwashers securing A4A4 to A4 chassis.
   2. Unsolder and tag wires, and remove A4A4.

6.1.8 Removal and Disassembly of Power Supply Assembly A5

a. Remove six flathead screws at rear of A5 (three on each side). Refer to figure 48.
b. Remove seven panhead screws at rear of A5.
c. Remove one screw (viewing from front of unit) located on right side of chassis just below upper rail.
d. Loosen two captive fasteners securing front of A5 to bottom of chassis. Refer to figure 49.
e. Remove connectors P1 and P2 from A5. Refer to figure 42.
f. Lift front end of A5 approximately 3 to 4 inches from bottom of chassis, and remove A5 from rear of chassis. Use extreme care when removing A5 so as not to damage BNC connectors at rear of chassis.
g. Remove five screws and two flat washers securing printed circuit board A5A2, and remove A5A2. Refer to figure 49.
h. Remove process A board A5A1 as follows:
   1. Remove six screws securing cover at top of A5.
   2. Remove two screws securing heat-sink assembly A5A3 (screws on side of A5A3 nearest fan A5B1).
   3. Remove three flathead screws and one panhead screw (securing A5A1 to A5 chassis) from bottom of A5.
   4. Remove A5A1, unsolder, and tag wires as necessary.
i. Remove fan A5B1 as follows:
   1. Remove two screws securing protective cover at bottom of A5B1, and remove cover.
   2. Unsolder and tag wires to A5B1.
   3. Remove two screws securing top of A5B1, and remove A5B1.
j. Remove heat-sink assembly A5A3 or A5A4 by removing four screws from each assembly (one screw at each corner). Unsolder and tag wires, and remove assembly.

6.1.9 Removal of Digitally Controlled Attenuator A6AT1

a. Remove module bracket from rf modulator assembly A3 and synthesizer assembly A4 according to the following steps. Refer to figure 44.
   1. Remove four screws securing module bracket to the top of A3 and A4.
   2. Remove four screws (two at each end) securing module bracket to chassis, and remove module bracket.
b. Disconnect coax connector from side of A3 (coax is from attenuator A6AT1, P/O A6). Refer to figure 45.
c. Disconnect P5 from rear of A3. Refer to figure 42.
d. Lift assemblies A3 and A4 from chassis.
e. Remove two screws securing A6AT1 mounting bracket to bottom of chassis. Refer to figure 50.

f. Remove two screws securing A6AT1 mounting bracket to side of chassis.
g. Disconnect connector P7 on chassis wiring harness from connector on A6AT1 mounting bracket. Unscrew coax connector on A6AT1 (connected to RF OUT connector), and remove A6AT1 with mounting bracket from chassis.
h. Unscrew coax connector on end of A6AT1 (coax was from module A3). Remove two screws and four flat washers securing A6AT1 to mounting bracket, and remove A6AT1 from mounting bracket.

6.1.10 Removal of Remote Tune Assembly A8

a. Lift up on circuit card extractors at top edges of assembly.
b. Pull assembly straight up out of card cage.

6.1.11 Removal of Store/Recall Assembly A9

Caution

Devices with reference designators U2, U6, U9, U18, U22, and U23 are electrostatic sensitive and require special handling as described in Collins document 523-0763405, Repair Instructions for Planar Assemblies and Cables.

a. Lift up on circuit card extractors at top edges of assembly.
b. Pull assembly straight up out of card cage.

6.1.12 Removal of IEEE-488/1978 Program I/O A10

Caution

The following devices on A10 are electrostatic sensitive and require special handling as described in Collins document 523-0763405, Repair Instructions for Planar Assemblies and Cables.

A10 (CPN 601-5883-001) — U7 and U8
A10 (CPN 601-2309-001) — U3

a. Lift up on circuit card extractors at top edge of assembly.
b. Pull assembly straight up out of card cage.

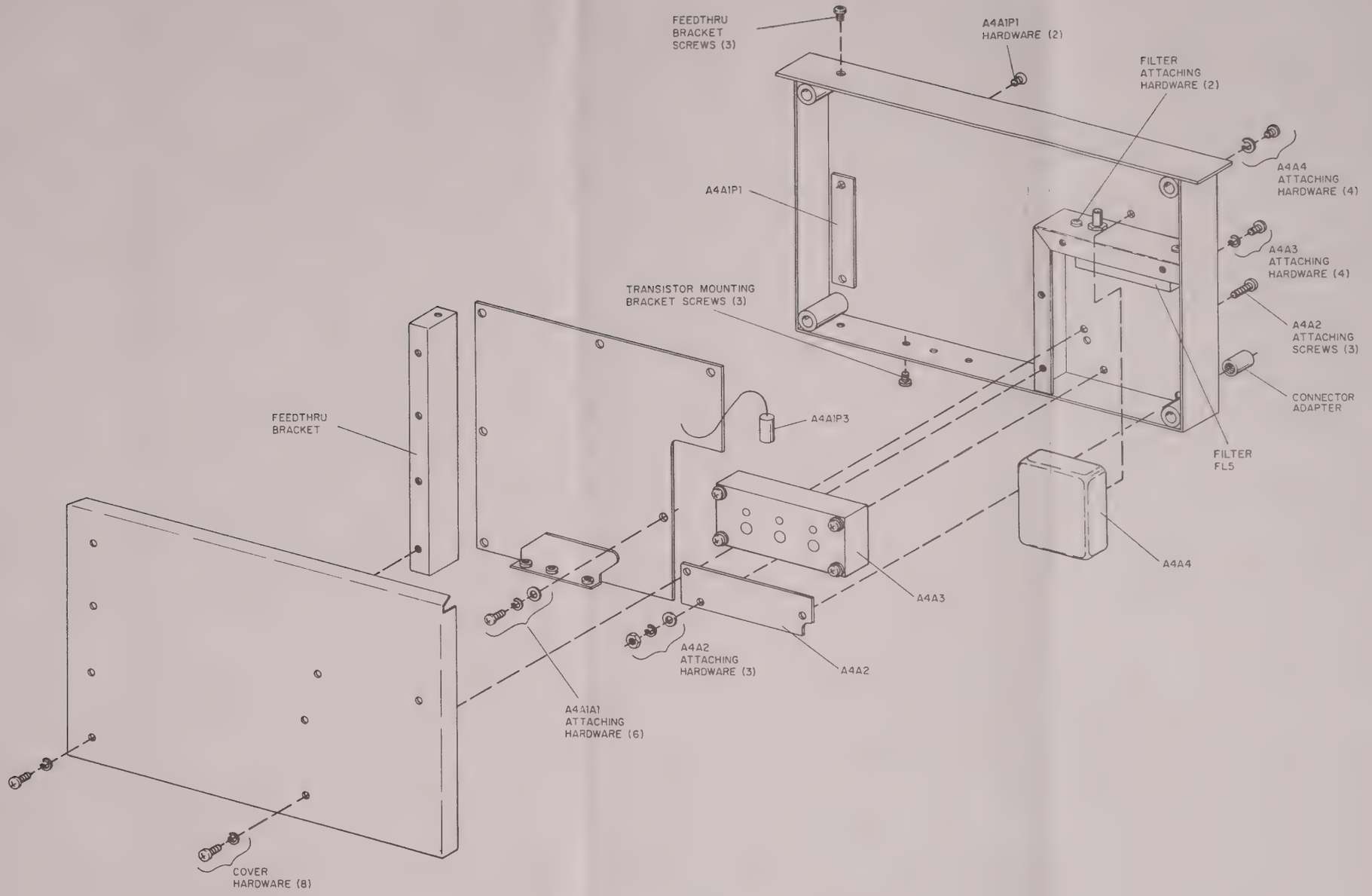

TP5-4840-013

Synthesizer Assembly A4, Disassembly
Figure 4-7

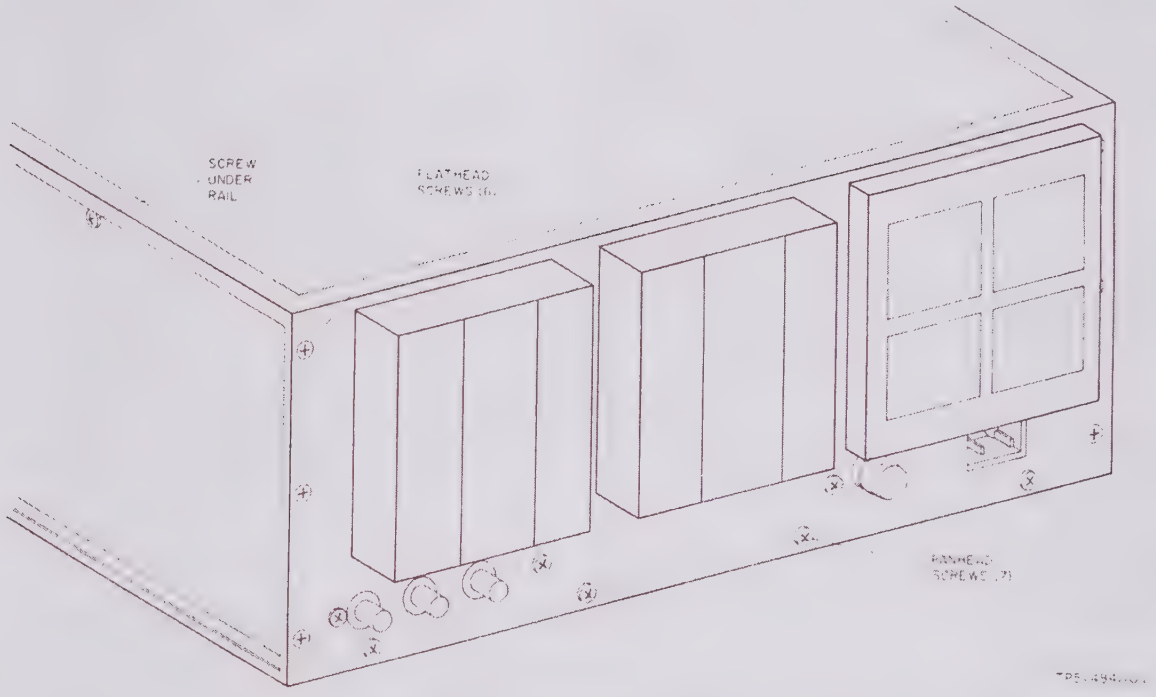

Power Supply Assembly A5, Removal
Figure 18

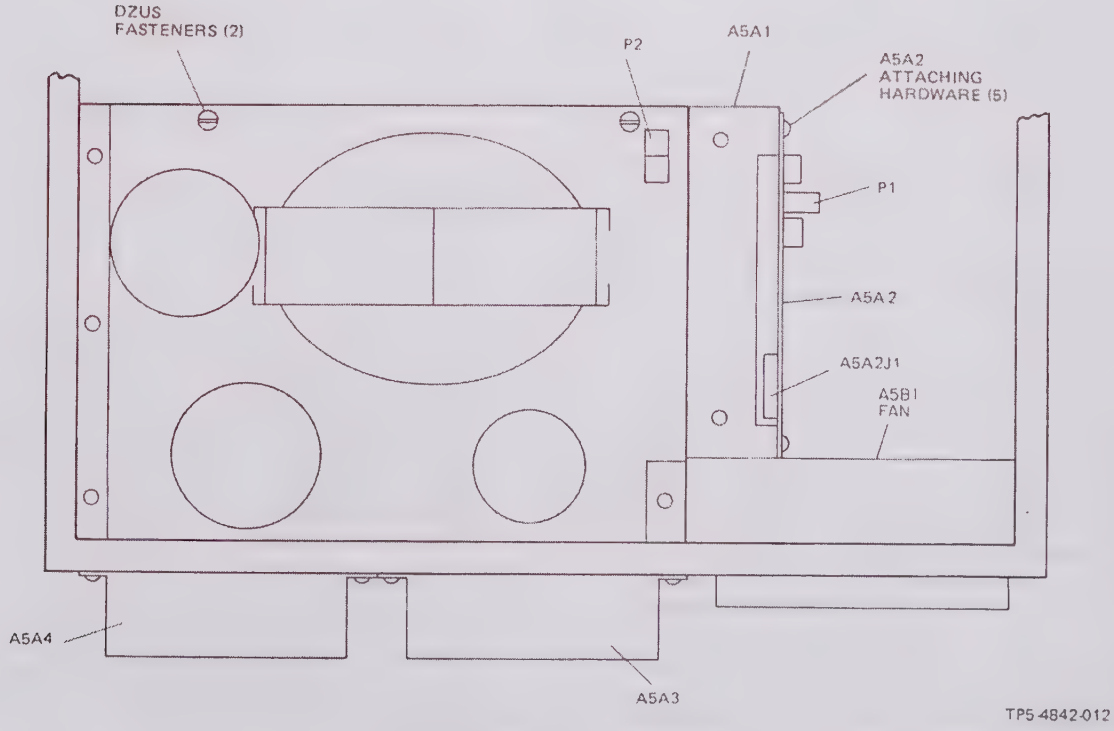

Power Supply Assembly A5, Disassembly
Figure 19

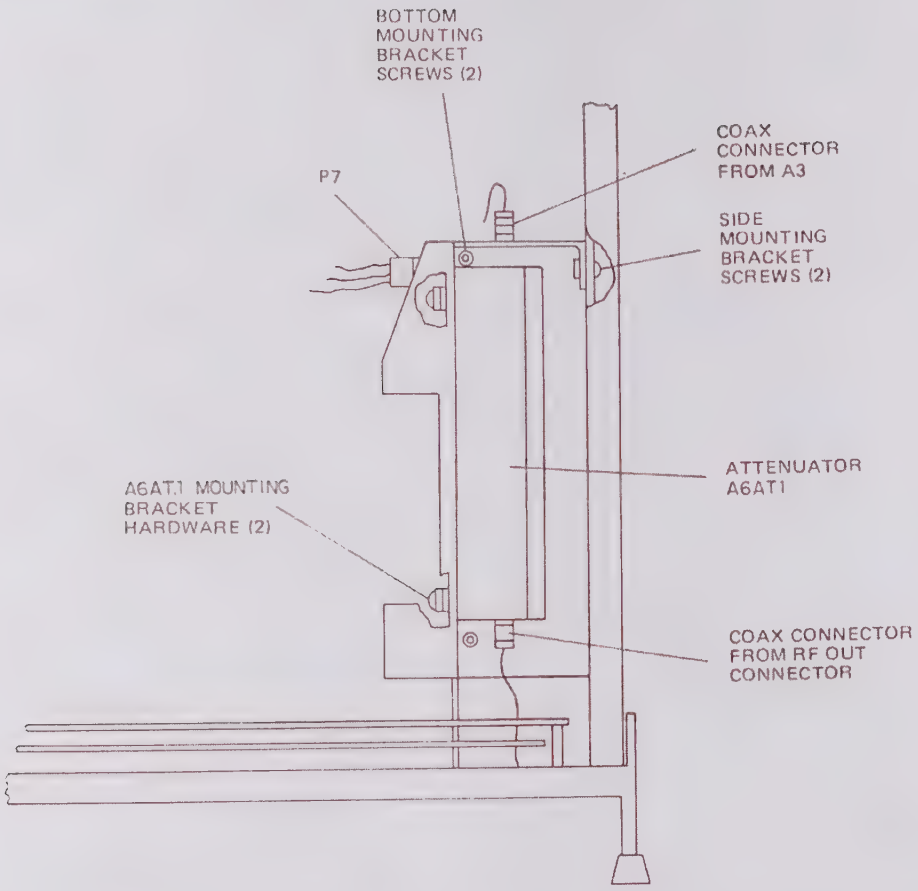

Digitally Controlled Attenuator A6AT1
Figure 50

6.2 Assembly

6.2.1 General

The assembly procedures provide instructions for assembling the module assemblies and installing the modules and printed circuit cards in the signal generator chassis.

6.2.2 Precautions and General Techniques

Caution

Use heat sink on solid-state device leads to prevent damage to semiconductors.

a. Reconnect all wiring after installing each component, part, or assembly. Refer to notes made during disassembly for color coding; lead, wire, or cable placement; and installation of insulation (when required) before soldering any component, part, or assembly.
b. Replace any defective wiring with wire of the same size and color coding.
c. Lace all wiring harnesses at one-half-inch intervals and at breakpoints.
d. When soldering coax cable to circuit boards, always install cable clamp first and then solder coaxial cable conductor to pad on board. This prevents excessive torque of cable from lifting circuit board pad.

6.2.3 Reassembly and Replacement of Digitally Controlled Attenuator A6AT1

a. Position A6AT1 on mounting bracket so A6AT1 terminals are toward top of signal generator, and secure to mounting bracket with two screws and four flat washers. Refer to figure 50.
b. Connect white translucent connector (P7) on chassis wiring harness to mating connector on A6AT1.
c. Position A6AT1 mounting bracket in signal generator chassis and secure with four screws, two screws on side and two screws on bottom of signal generator chassis.
d. Screw coax connectors to both ends of A6AT1 (one from RF OUT connector and one from rf modulator assembly A3).

6.2.4 Reassembly and Replacement of Power Supply Assembly A5

a. Secure top of fan A5B1 to power supply chassis with two screws and two flat washers.
b. Refer to notes made during disassembly and solder wires to terminals at bottom of A5B1.
c. Position protective bracket at bottom of A5B1, and secure bracket and bottom of A5B1 to rear of A5 chassis with two screws.
d. Refer to notes made during disassembly and solder wires to heat-sink assembly A5A3 and A5A4. Secure A5A4 to rear of A5 chassis with four screws. Secure A5A3 to rear of A5 chassis with two screws (attach with two screws nearest A5A4).
e. Reattach process A board A5A1 to power supply A5 chassis with two screws thru heat sink A5A3 at rear of A5 and three flathead screws and one panhead screw from bottom of A5 chassis. Refer to figure 49.
f. Position A5A2J1 to mate with the pinfield on A5A1 and secure A5A2 with five screws and two flat washers.
g. Replace cover on A5 and secure with six screws.
h. Place power supply assembly A5 in signal generator chassis, taking care not to damage BNC connectors at rear of signal generator chassis or pinch cable under fan guard of power supply, and secure as follows:
    1. Tighten two captive fasteners to secure front of A5 to bottom of signal generator chassis. Refer to figure 49.
    2. Replace and tighten one screw on side of signal generator under rail. Refer to figure 48.
    3. Replace and tighten seven panhead screws and six flathead screws at rear of signal generator.
    4. Attach connectors P1 and P2 from chassis wiring harness to mating connectors on A5. Refer to figure 49.

6.2.5 Reassembly and Replacement of RF Modulator Assembly A3 and Synthesizer Assembly A4

a. Reassemble A4 according to the following steps. Refer to figure 47.
    1. Secure filter FL5 to A4 chassis wall with two screws, two nuts, two lockwashers, two flat washers, and two ground lugs.
    2. Secure A4A3 from back side of A4 with four screws and four lockwashers.
    3. Refer to notes made during disassembly and solder wires/components to filter FL5 and A4A3.
    4. Secure A4A2 to A4 with three nuts, three flat washers, three lockwashers, and three screws.
    5. Screw connector adapter and spring washer to coax connector from A4A2 extending out back of A4 chassis.
    6. Refer to notes made during disassembly, and solder connections to A4A2.
    7. Place A4A1 in A4 chassis and secure as follows:
        (a) Secure A4A1P1 to rear of A4 chassis with two screws and attaching hardware.
        (b) Secure bracket with three screws.
        (c) Secure transistor mounting bracket on A4A1A1 to side of A4 chassis with three screws.
        (d) Secure A4A1A1 with six screws, six flat washers, and six lockwashers.
    8. Secure A4A4 with four screws and four lockwashers.
    9. Refer to notes made during disassembly, and solder connections to A4A1 and A4A4.
    10. Connect coax connector A4A1P3 to coax on filter FL5.
    11. Secure cover on A4 with eight screws and eight lockwashers.
b. Reassemble A3 according to the following steps. Refer to figure 46.
    1. Secure A3A1 to A3 chassis with four screws and four washers.
    2. Secure cover over A3A1 with 14 screws and 1 flat washer.
    3. Connect ribbon cable connector A3W1P2 to pinfield on A3A2.
    4. Position A3A2 in A3 chassis, and secure A3A2J1 with two screws and two lockwashers.
    5. Mate connector A3A1W1P1 (on cable assembly from A3A1) with pinfield on A3A2.

6. Mate coax connector A3A2W1P1 (on cable from A3A2) with A3A3J2.
7. Mate coax connector A3A3W3P1 (on cable from A3A3) with coax from A3A1.
8. Connect ribbon cable connector A3W1P1 to pinfield on A3A3.
9. Place A3A3 over A3A2 and secure the two subassemblies to A3 chassis with four screws and four flat washers.
10. Place cover on A3 assembly.

c. Attach A3 to A4, ensuring guide pins, coax connector, and rack and panel connectors all engage properly.
d. Secure A4 to A3 with two screws, two flat washers, and two lockwashers. Refer to figure 45.
e. Connect P5 from chassis wiring harness to mating connector on A3, and place A3/A4 in signal generator chassis. Refer to figure 42. Press coax connector, from A6AT1, onto mating connector at end of A3.
f. Place module bracket on rf modulator assembly A3 and synthesizer assembly A4 and secure as follows:
   1. Install four screws (two at each end) to secure module bracket to chassis.
   2. Install four screws to secure module bracket to the top of A3 and A4.

6.2.6 Reassembly and Replacement of Controller/Audio Assembly A2

a. Secure A2A3 to A2 mounting bracket assembly with six screws. Refer to figure 44.
b. Carefully mate printed circuit board connector on A2A2 with pinfield on A2A3, and press two boards together.
c. Secure A2A2 to hexposts on A2 mounting bracket assembly with two screws with washers and two nuts with washers.
d. Carefully mate printed circuit board connector on A2A1 with pinfield on A2A3, and press two boards together.
e. Secure A2A1 to hexposts on A2 mounting bracket assembly with four screws.
f. Mate P3 and P4 (on chassis wiring harness) with pinfields on A2A1 and A2A2 respectively. Refer to figure 42.
g. Slide controller/audio assembly A2 into signal generator chassis, taking care not to pinch wiring harness, and secure with four captive fasteners. Refer to figure 44.
h. Place module bracket over A3 and A4, and secure with four screws at top and two at each end. Refer to figure 44.

6.2.7 Reassembly and Replacement of Front Panel Assembly A1

a. Position printed circuit board connector on A1A2 over mating pinfield on A1A1, and carefully press two boards together. Ensure A1A2 is completely mated with A1A1.
b. Secure A1A2 to standoff posts on A1A1 with three screws. Refer to figure 43.

Caution

Ensure that all LED's are properly positioned so as to fit into narrow slots of front panel. These LED's must be positioned exactly to prevent breakage of LED's or wiring. Do not force A1 assembly onto front panel. Assembly falls into place when LED's are properly positioned.

c. Place A1 in position on front panel and secure with eight screws.
d. Refer to notes made during disassembly, and solder two wires from SELF TEST switch to A1A1.
e. Mate connector P6 to pinfield on A1A1 and J4 to A1P1 (A1P1 on cable assembly from A1A1). Refer to figure 42.
f. Secure front panel to signal generator chassis with four screws and four flat washers.

6.2.8 Replacement of Remote Tune Assembly A8

a. Carefully insert assembly into slots, second set from front, on card cage assembly.
b. Press assembly onto pinfield and latch extractors.

6.2.9 Replacement of Store/Recall Assembly A9

a. Carefully insert assembly into guide slots, first set from front, on card cage assembly.
b. Press assembly onto pinfield and latch extractors.

6.2.10 Replacement of IEEE-488/1978 Program I/O A10

a. Carefully insert assembly into guide slots, fourth set from front, on card cage assembly.
b. Press assembly onto pinfield and latch extractors.

6.2.11 Replacement of Cover

Place cover on signal generator and secure with 10 screws, 2 on each side and 6 on the bottom.

6.2.12 Replacement of Lens Switches and Bulbs

a. Refer to bulb removed from behind lens switch during disassembly. Cut and bend leads on new bulb to same dimensions and same bends as old bulb. Press bulb into position behind lens switch.
b. Press lens switch into place on front panel until it snaps into place.

7. REPAIR

If repair of planar assemblies (circuit card or process board assemblies) is to be attempted, request document entitled "Repair Instructions for Planar Assemblies and Cables," Collins part number 523-0763405, dated 1 January 1978. Send requests to Publications Department, Collins Government Avionics Division/Rockwell International, Cedar Rapids, Iowa 52406.

VCO assembly A4A3, TCXO assembly A4A4, and digital attenuator A6AT1 are nonfield repairable assemblies and each should be replaced as an assembly.

CPU assembly A2A1, analog board A2A2, TDM board A2A3, demodulator/ALC board A3A2, store recall assembly A9, and IEEE-488/1975 I/O A10 contain MOS devices that can be damaged by static voltages present in most repair facilities. These assemblies require special handling as described in Collins document "Repair Instructions for Planar Assemblies and Cables."

The MOS devices on A2A1 that require special handling are U1, U2, U4, U11, U12, U17, U18, U19, U20, U25, and U26. The devices on A2A2 are U2, U3, U5, U10, U18, and U22. The devices on A2A3 are U12, U70, U71, U92, U95, and U118. The devices on A3A2 are U4 and U13. The devices on A9 are U2, U6, U9, U18, U22, and U23. The devices on A10 (CPN 601-5883-001) are U7 and U8. The device on A10 (CPN 601-2309-001) is U3.

If repairing rf strip-line assembly A3A1, additional precautions should be taken. Excessive heat or solder from the soldering iron may change the characteristics of the microstrip circuitry if a pad is lifted.

8. ALIGNMENT

8.1 Introduction

This paragraph provides the alignment procedures required to adjust the signal generator for correct operation. The alignment procedures should be performed only under the following conditions.

a. Unsatisfactory results are obtained during performance of minimum or total performance tests contained in this section.
b. Unsatisfactory results are obtained during performance of calibration verification procedures contained in the calibration verification section of this instruction book.
c. As instructed in the module or functional troubleshooting procedures.
d. After replacement of specific circuit boards or module assemblies. The following alignment procedures must be performed after replacement of the specified circuit board or module assemblies.

BOARD OR ASSEMBLY REPLACED	ALIGNMENT PARAGRAPHS TO BE PERFORMED
A2A2	8.3, 8.5, 8.7
A2A3	8.3, 8.5, 8.6, 8.7
A3A1	8.9, 8.10
A3A2	8.9, 8.10
A4	8.4, 8.8, 8.11, 8.12
A5	8.2

The number in parentheses following the test equipment is the item number of equipment as listed in table 1. Table 1 identifies the equipment and the required minimum parameter requirements.

Refer to component location diagrams and schematic diagrams contained in the diagrams section of this instruction book for location of components and test points referred to in the alignment procedures.

8.2 Power Supply Alignment

a. Remove dust cover as described in paragraph 6.1.3.
b. Remove module bracket as described in paragraph 6.1.6.a.
c. Loosen four captive fasteners that secure controller/audio assembly A2 to chassis. Lift A2 straight up and align two bottom mounting holes on A2 with two top captive fasteners on chassis, and tighten two captive fasteners to secure A2 in the extended position.

Note

Refer to figure 35 for component, test-point, and adjustment locations.

d. Remove wiring harness connector P1 from power supply connector A5A2P1.

e. Turn A5A2R1 and R2 fully counterclockwise.
f. Connect 100-Ω, 1-percent, 1/8-W resistor (2.24) between A5A2TP1 and TP2.
g. Connect dvm (2.2) to A5A2P1-29.
h. Set TI POWER switch to on. If initial TI turn-on, wait 30 minutes for TI warmup.
i. Adjust A5A2R2 for 6.4 ±0.1 V dc.
j. Monitor dvm and very slowly adjust A5A2R1 until voltage just drops to less than 1.5 V dc.
k. Press TI POWER switch to off.
l. Remove 100-Ω resistor from A5A2TP1 and TP2.
m. Press TI POWER switch to on.
n. Adjust A5A2R2 for 5.00 ±0.05 V dc.
o. Press TI POWER switch to off.
p. Disconnect dvm from TI and connect P1 to A5A2P1.
q. Connect dvm to connector pin A2A3J1-8.
r. Press TI POWER switch to on.
s. Adjust A5A2R2 for 5.00 ±0.5 V dc.
t. Check for +12 ±2 V dc at A5A2J1-7.
u. Check for +15.0 ±0.7 V dc at A5A2P1-43.
v. Check for +24.0 ±1.2 V dc at A5A2P1-40.
w. Check for -15.0 ±0.7 V dc at A5A2P1-41.
x. Press TI POWER switch to off.
y. Loosen two captive fasteners that secure A2 to chassis, and lower A2 in position on chassis. Tighten four captive fasteners to secure A2 in chassis.
z. Install module bracket and secure with eight screws. Refer to figure 44.
aa. Perform total performance test described in paragraph 4.3.

8.3 Analog Card A2A2 +12-V DC Regulator

a. Remove dust cover as described in paragraph 6.1.3.
b. Connect dvm (2.2) to A2A2U1-6. Refer to figure 26 for test-point location.
c. Press TI POWER switch to on. If initial TI turn-on, wait 30 minutes for TI warmup.
d. Adjust A2A2R1 for 12.00 ±0.02 V dc.
e. Press TI POWER switch to off.
f. Perform total performance test described in paragraph 4.3.

8.4 Synthesizer Assembly A4 +20-V DC Regulator

a. Remove dust cover as described in paragraph 6.1.3.
b. Remove rf modulator assembly A3 and synthesizer assembly A4 from chassis as described in paragraph 6.1.6 steps a through d.
c. Install A3 and A4 on extender cable (2.24).

Note

With A3 and A4 on extender cable, the rf output signal is removed from RF OUT connector on front panel.

d. Remove eight screws and lockwashers that secure cover on A4, and remove cover. Refer to figure 47.
e. Connect dvm to positive end of A4A1A1C42.
f. Press TI POWER switch to on. If initial TI turn-on, wait 30 minutes for TI warmup.
g. Adjust A4A1R51 for +20.00 ±0.15 V dc.
h. Disconnect dvm from A4A1A1C42.
i. Check for +5.0 ±0.1 V dc at A4A1A1C52 (+).
j. Press TI POWER switch to off.
k. Disconnect A3 and A4 from extender cable.
l. Install cover on A4 and secure with eight screws and lockwashers.
m. Install A3 and A4 in chassis, and connect connector P5 from chassis wiring harness to mating connector on A3. Press coaxial connector from A6 over mating connector at end of A3.
n. Install module bracket and secure with eight screws. Refer to figure 44.
o. Perform total performance test described in paragraph 4.3.

8.5 Audio Tone Level

8.5.1 VOR Signal

a. Press TI POWER switch to ON. If initial turn-on, wait 30 minutes for TI warmup.
b. Set TI to 108.000 MHz and press STD key.
c. Connect one channel of oscilloscope (2.8) to COMP connector on rear of TI and second channel to AUX connector.
d. Check that displayed signals are similar to figure 51.
e. Press T/F key and check that displayed signals are similar to figure 52.
f. Disconnect oscilloscope from TI.
g. Connect true rms differential voltmeter (2.3) to TI AUX connector on rear panel, and adjust A2A2R12 for 1.000 ±0.003 V rms.
h. Disconnect differential voltmeter from AUX connector and connect to COMP connector.
i. Adjust A2A2R9 fully clockwise.
j. Set TI to 30-Hz VAR tone only.
k. Adjust A2A2R3 for 1.022 ±0.002 V rms.
l. Adjust A2A2R6 fully clockwise.
m. Set TI to 9960-FM tone only.
n. Adjust A2A2R2 for 1.040 ±0.002 V rms.
o. Adjust A2A2R6 for 1.000 ±0.001 V rms.
p. Set TI to 30-Hz VAR tone only.

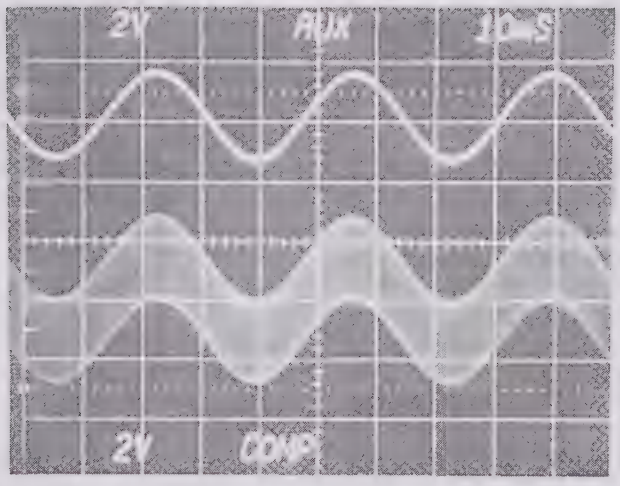

TP5-5380-017

30-Hz Reference and Standard VOR Audio Composite Signals (FROM)
Figure 51

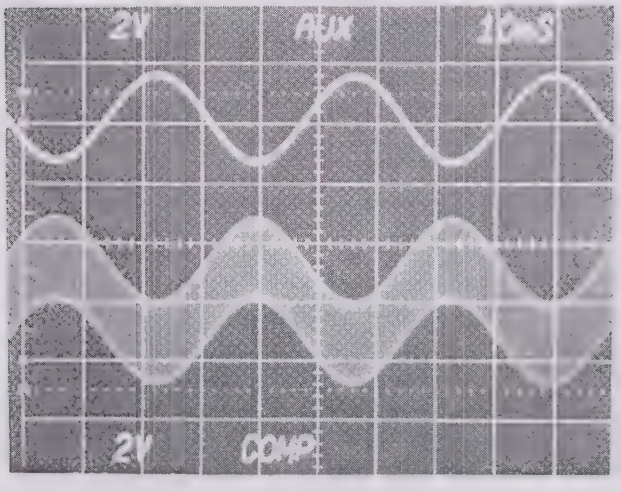

TP5-5381-017

30-Hz Reference and Standard VOR Audio Composite Signals (TO)
Figure 52

q. Adjust A2A2R9 for 1.000 ±0.001 V rms.
r. Set TI to 1020-Hz tone only.
s. Adjust A2A2R10 for 1.000 ±0.001 V rms.
t. Disconnect differential voltmeter.
u. Perform total performance test as described in paragraph 4.3.

8.5.2 ILS Signal

a. Press TI POWER switch to on. If initial turn-on, wait 30 minutes for TI warmup.
b. Set TI to standard localizer signal of 108.10 MHz.
c. Connect oscilloscope (2.8) to COMP connector on rear panel of TI.
d. Check that displayed signal is similar to signal shown on figure 53.
e. Disconnect oscilloscope from TI, and connect true rms differential voltmeter (2.3) to COMP connector.
f. Balance 90-Hz and 150-Hz tones by deleting and adding the two tones on TI keyboard (such that only one tone is present at a time) and adjusting A2A2R7 until the two voltages are within 50 μV of each other.
g. Set TI to 150-Hz tone only.
h. Adjust A2A2R4 for 1.000 ±0.001 V rms. Record voltage.
i. Set TI to 90-Hz only.
j. Check that voltage is 1.000 ±0.001 V rms and within 50 μV of voltage recorded in step h. If tolerance is incorrect, repeat steps f through j until correct requirements are met.
k. Set TI for 1020-Hz tone only.
l. Adjust A2A2R5 for 1.5000 ±0.0015 V rms.
m. Disconnect differential voltmeter from TI.

8.5.3 Marker Beacon Signal

a. Press TI POWER switch to ON. If initial turn-on, wait 30 minutes for TI warmup.
b. Set TI to standard marker beacon signal at 75.000 MHz with 400-Hz tone.
c. Connect true rms differential voltmeter to COMP connector on TI rear panel.
d. Check for 1.00 ±0.01 V rms.
e. Set TI to 1300-Hz tone.
f. Check for 1.000 ±0.005 V rms.

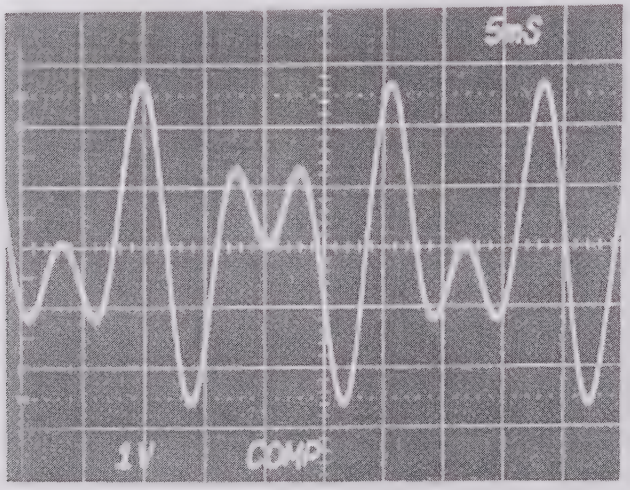

TP5 5379-017

Standard Localizer 90/150-Hz Composite Signal
Figure 53

g. Set TI to 3000-Hz tone.
h. Check for 1.00 ±0.02 V rms.
i. Disconnect differential voltmeter from TI.

8.6 Audio Tone Frequency

8.6.1 VOR Signal

a. Connect frequency counter (2.7) to COMP connector on rear panel of TI.
b. Set TI to standard VOR signal at 108.00 MHz with 9960-Hz (not 9960 FM) tone only.
c. Adjust A2A3C7 (figure 54) for 100.4016 ±0.0010 μs (9960.0000 ±0.0991 Hz).
d. Set TI for 30-Hz VAR tone only.
e. Check for 33 331.67 to 333 35.00 μs (30.0015 to 29.9985 Hz).
f. Set TI to 1020-Hz tone only.
g. Check for 980.3431 to 980.4411 μs (1020.051 to 1019.949 Hz).

8.6.2 ILS Signal

a. Set TI to standard localizer signal at 108.100 MHz with 90-Hz tone only.
b. Check for 11 110.56 to 1111.66 μs (90.0045 to 89.9555 Hz).
c. Set TI to 150-Hz tone only.
d. Check for 6666.334 to 6667.000 μs (150.0075 to 149.9925 Hz).
e. Set TI to 1020-Hz tone only.
f. Check for 980.3431 to 980.4411 μs (1020.051 to 1019.949 Hz).

8.6.3 Marker Beacon Signal

a. Set TI to standard marker beacon signal at 75.000 MHz with 400-Hz tone.
b. Check for 2499.875 to 2500.125 μs (400.02 to 399.98 Hz).
c. Set TI to 1300-Hz tone.
d. Check for 769.1923 to 769.2692 μs (1300.065 to 1299.935 Hz).
e. Set TI to 3000-Hz tone.
f. Check for 3333.167 to 3333.5 μs (3000.15 to 2999.85 Hz).
g. Disconnect frequency counter.

8.7 VOR Radial

a. Connect VOR bearing standard (2.9) input to COMP connector on rear panel to TI.

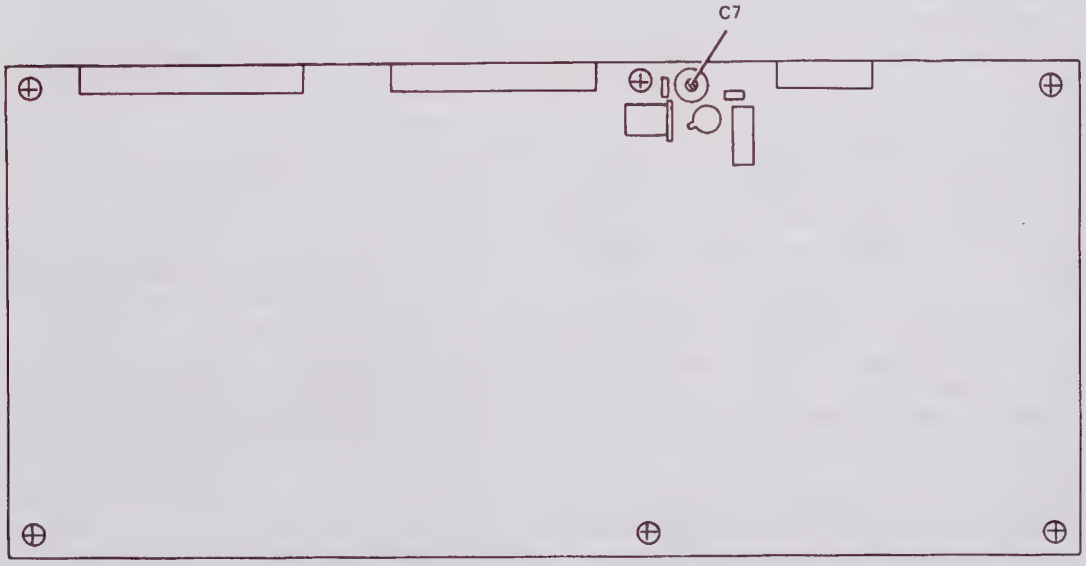

TP5-5121-019

TDM Board A2A3C7 Location
Figure 54

b. Set TI POWER switch to on. If initial turn-on, wait 30 minutes for TI warmup.
c. Set TI to standard VOR signal at 116.000 MHz.
d. Adjust A2A2R8 for 0-degree bearing.
e. Advance radial in 30-degree steps through 360 degrees. Check that bearing standard reading is within ±0.02 degree of selected radial.
f. Disconnect VOR bearing standard from TI.
g. Connect phasemeter (2.15) to TI with reference input connected to COMP connector and test input connected to AUX connector on rear panel.
h. Set TI to 30-Hz VAR tone only at a 0-degree radial.
i. Adjust A2A2R11 for 0.00 ±0.10-degree phase difference.
j. Set TI to 180-degree radial.
k. Check that phase difference is 179.80 to 180.20 degrees.
l. Disconnect phasemeter.

8.8 RF Output Frequency

a. Connect frequency counter (2.7) to RF OUT connector on TI front panel.
b. Set TI POWER switch to ON. If initial turn-on, wait 30 minutes for TI warmup.
c. Set TI to standard VOR signal at 108.000 MHz with all tones removed and rf level of -6 dB mW.
d. Adjust A4 TCXO ADJUST for 107.999 946 to 108.000 054 MHz.
e. Disconnect frequency counter.

8.9 RF Output Level

8.9.1 Marker Beacon Signal

a. Press TI POWER switch to on. If initial turn-on, wait 30 minutes for TI warmup.
b. Set TI to standard marker beacon signal of 75.000 MHz.
c. Set TI output level to -6 dB mW.
d. Set RF ON/OFF key to OFF and ΔF key to OFF.
e. Set TI 400-Hz tone to off, and check that 1300-Hz and 3000-Hz tones are off.
f. Connect power meter (2.4) to RF OUT connector on front panel.
g. Zero power meter.
h. Set TI RF ON/OFF key to on.
i. Loosen two screws that secure test-point cover over test points on A3, and slide cover open.
j. Adjust A3A2R7 for -6.0 ±0.1 dB mW.

8.9.2 VOR/LOC Signals

a. Set TI to standard VOR signal of 113.00 MHz and set RF LEVEL to -6 dB mW.
b. Remove 30-Hz VAR and 9960-FM tones.
c. Adjust A3A2R8 for -6 ±0.1 dB mW.
d. Set TI to standard VOR signal of 108.00 MHz and set RF LEVEL to -6 dB mW.
e. Remove 30-Hz VAR and 9960-FM tones.
f. Check that power meter indicates -6.0 ±0.3 dB mW.
g. Set TI to standard VOR signal of 117.95 MHz and set RF LEVEL to -6 dB mW.
h. Remove 30-Hz VAR and 9960-FM tones.
i. Check that power meter indicates -6.0 ±0.3 dB mW.

8.9.3 Glideslope Signal

a. Set TI to standard glideslope signal of 332.00 MHz and set RF LEVEL to -6 dB mW.
b. Remove 90-Hz and 150-Hz modulation tones.
c. Adjust A3A2R6 for -6.0 ±0.1 dB mW.
d. Set TI to standard glideslope signal of 329.15 MHz and set RF LEVEL to -6 dB mW.
e. Remove 90-Hz and 150-Hz modulation tones.
f. Check that power meter indicates -6.0 ±0.3 dB mW.
g. Set TI to standard glideslope signal of 335.00 MHz and set RF LEVEL to -6.0 dB mW.
h. Remove 90-Hz and 150-Hz modulation tones.
i. Check that power meter indicates -6.0 ±0.3 dB mW.
j. Disconnect power meter from TI.
k. Slide cover over A3 test points and tighten two screws.

8.10 AM Modulation

Note

There are two methods available for adjusting the AM modulation of the TI. The first method, beginning at paragraph 8.10.1, uses a modulation meter (2.17). In case the modulation meter is unavailable, an alternate procedure using a spectrum analyzer (2.1) is provided. This alternate procedure begins at paragraph 8.10.2.

8.10.1 AM Modulation (Using Modulation Meter)

8.10.1.1 Localizer Signal

a. Connect modulation meter to TI RF OUT connector.
b. Press TI POWER switch to ON. If initial turn-on, wait 30 minutes for TI warmup.
c. Make the following instrument settings.

TI

FREQUENCY	108.10
RF LEVEL	-6 dB mW
TONE SELECT	90 Hz (150 Hz off)
ΔF	OFF

MODULATION METER (2.17)

TUNING	AUTO
HIGHPASS	10 Hz
LOW PASS	15 kHz
PEAK	PK-PK / 2
RANGE	10
FUNCTION	% AM
LEVEL	AUTO

d. Loosen two screws and slide cover over A3 test points to open position.
e. Adjust A3A2R2 for 19.95 to 20.05 percent modulation meter reading.

8.10.1.2 VOR Signal

a. Set TI to 108.00 MHz, -6 dB mW, with 30 Hz VAR tone only.
b. Reset modulation meter RANGE to 100 and LOWPASS to 120 kHz.
c. Adjust A3A2R4 for a modulation meter reading of 29.95 to 30.05 percent. Note modulation meter reading.
d. Delete 30-Hz VAR tone and add 9960-Hz (not 9960 FM) tone. Note modulation meter reading.
e. Calculate average modulation percentage as follows:

$$\frac{\text{Step c reading} + \text{step d reading}}{2}$$

Caculated average must be between 29.50 and 30.50 percent. Adjust A3A2R4 until modulation meter indicates calculated average percentage.
f. Delete 9960-Hz tone and add 30-Hz VAR tone. Verify modulation meter indicates between 29.5 and 30.5 percent.
g. Delete 30-Hz VAR tone and add an AUX audio tone of 3000 Hz. Verify modulation meter indicates between 29.5 and 30.5 percent.

8.10.1.3 Glideslope Signal

a. Set TI to 332.00 MHz, -6 dB mW, with 90 Hz tone only.
b. Reset modulation meter LOWPASS to 15 kHz.
c. Adjust A3A2R3 until modulation meter indicates between 39.9 and 40.1 percent.
d. Set TI to 329.15 MHz, -6 dB mW, with no tones (all keys off).
e. Connect audio oscillator (2.18) to the rear EXT MOD BNC connector. Set to provide a signal of 150 Hz at 3 V rms ±0.01 V.
f. Adjust A3A2R5 until modulation meter indicates 88 to 92 percent.
g. Connect oscilloscope (2.8) to modulation meter audio frequency output and verify no signal clipping.

8.10.1.4 Marker Beacon Signal

a. Set TI to 75.00 MHz, -6 dB mW, with 1300 Hz tone on.
b. Reset modulation meter RANGE to 10.
c. Adjust A3A2R1 until modulation meter indicates between 94.9 and 95.1%.
d. Close cover over A3 test points and tighten two screws.

8.10.2 AM Modulation (Using Spectrum Analyzer)

8.10.2.1 Localizer Signal

a. Perform steps 4.3.12.2 a through i to determine V_{OFF}.
b. Connect TI test equipment as shown in figure 55. Loosen two screws and slide cover over A3 test points to open position.

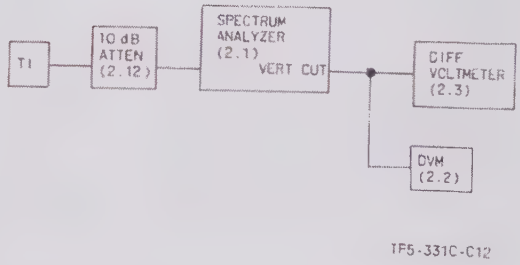

AM Modulation, Equipment Setup
Figure 55

c. Make the following instrument settings.

TI

FREQUENCY	108.10
RF LEVEL	-6 dB mW
TONE SELECT	90 Hz (150 Hz off)
% MOD	20%
POWER	ON

DVM (2.2)

Function	Dc volts
Range	2

SPECTRUM ANALYZER (2.1)

Frequency	108.10 MHz
Tuning stabilizer	Off
Bandwidth	300 kHz
Scan width	200 kHz/division
Input attenuation	10 dB

SPECTRUM ANALYZER (2.1)

Scan time	2 ms/division
Linear sensitivity	2 mV/division
Vertical sensitivity	Linear
Video filter	Off
Scan mode	Internal
Scan trigger	Automatic
Display controls	As required

Note

If initial turn-on, wait 30 minutes for TI warmup.

d. Adjust spectrum analyzer frequency and linear sensitivity controls for center screen display of 108.10-MHz signal.

e. Set spectrum analyzer tuning stabilizer to on and scan width to zero, and adjust frequency controls for peak amplitude indication (maximum dc voltage indication on dvm). Maintain peaked condition during remainder of procedure.

f. Adjust spectrum analyzer linear sensitivity control for a voltage equal to -282.8 mV + V_{OFF}.

For example:

Spectrum analyzer output voltage (V_{OFF})

= -282.8 mV + V_{OFF}

= -282.8 mV + 27.5 mV

= -255.3 mV

g. Measure ac level with true rms differential voltmeter. TI percent of modulation equals $\frac{V\ rms}{0.2}$ x 100. Adjust A3A2R2 for 39.9 to 40.1 mV rms (19.95 to 20.05 percent modulation).

8.10.2.2 VOR Signal

a. Set TI to 108.00 MHz, -6 dB mW, with 30 percent, 30-Hz VAR tone only. Repeat steps d thru f of paragraph 8.10.2.1 for 108.00 MHz.

b. Adjust A3A2R4 for 59.9 to 60.1 mV rms (29.95 to 30.05 percent modulation). Record mV rms value.

c. Delete 30-Hz VAR tone and add 9960-Hz (not 9960-FM) tone. Results: 58.0 to 61.0 mV rms (29.00 to 30.50 percent modulation). Record value.

d. Calculate average of values recorded in steps c and d $\frac{(\text{step c} + \text{step d})}{2}$. Calculated average value must be 59.0 to 61.0 mV rms (29.50 to 30.50 percent modulation). Adjust A3A2R4 to this calculated average value.

e. Delete 9960-Hz tone and add 30-Hz VAR tone. Verify voltmeter reading is 59.0 to 61.0 mV rms (29.50 to 30.50 percent modulation).

f. Delete 30-Hz VAR tone and add an AUX tone of 3000 Hz. Verify voltmeter reading is 59.0 to 61.0 mV rms (29.50 to 30.50 percent modulation).

8.10.3 Glideslope Signal

a. Set TI to 332.00 MHz, -6 dB mW, with 40 percent, 90 Hz only. Repeat steps d thru f of paragraph 8.10.1 for 332.00 MHz.

b. Adjust A3A2R3 for 79.8 to 80.2 mV rms (39.90 to 40.10 percent modulation).

c. Set TI to 329.15 MHz, -6 dB mW, with no tones (all keys off).

d. Connect audio oscillator (2.18) to the rear EXT MOD BNC connector. Set audio oscillator to provide a signal of 150 Hz at 3 V rms ±0.01 V.

e. Repeat steps d thru f of paragraph 8.10.2.1 for 329.15 MHz.

f. Adjust A3A2R5 for 176 to 184 mV rms (88 to 92 percent modulation).

g. Spectrum analyzer must not indicate clipping on the signal peaks.

8.10.4 Marker Beacon Signal

a. Set TI to 75.000 MHz, -6 dB mW, with 95 percent, 1300-Hz tone. Repeat steps d thru f of paragraph 8.10.2.1 for 75.000 MHz.

b. Adjust A3A2R1 for 189.8 to 190.2 mV rms (94.90 to 95.10 percent modulation).

c. Close cover over A3 test points and tighten two screws.

8.11 Synthesizer VCO A4A3 Alignment

Note

Do not perform these alignment procedures unless VCO A4A3 or A4A2 has been repaired or replaced with a new assembly. Do not perform any adjustments other than those listed. Remove A4A3R3, R4, and R5 if previously installed.

a. Remove and disassemble rf modulator assembly A3 and synthesizer assembly A4 to the extent described in disassembly/assembly paragraph 6.1.7, steps a through g.
b. Connect rf module extender cable (2.24) to TI wiring harness connector P5 and rf modulator assembly connector A3A3J4.
c. Connect synthesizer module extender cable (2.27) to synthesizer assembly connector P1 and rf modulator assembly connector A3A2J1.
d. Connect power meter (2.4) directly to synthesizer assembly connector P2.
e. Connect resistor substitution box (2.25) across A4A3C51 and A4A3C54 terminals. Refer to figure 34 for test connection locations.
f. Set TI POWER switch to ON. Set TI to 74.60 MHz.

Note

Disregard FREQUENCY display during alignment. Ensure ΔF is off during the alignment procedures.

g. Adjust resistor substitution box until power meter indication is 12 ±1 dB mW.
h. Set TI to 75.40 MHz and adjust resistor substitution box until power meter indication is 12 ±1 dB mW.
i. Repeat steps g and h to obtain a resistance value that produces the power meter indication closest to 12 dB mW at both frequencies.
j. Record resistor substitution box reading as test select value for A4A3R5.
k. Disconnect resistor substitution box and reconnect it across A4A3C51 and A4A3C55.
l. Set TI to 108.00 MHz. Adjust resistor substitution box until power meter indicates +12 ±0.2 dB mW.
m. Connect oscilloscope (2.8) to A4A1A1Q4 collector and observe 25 kHz waveform.
n. If necessary, adjust A4A3C5 and A4A3L2 to obtain a 5-percent duty cycle of the 25-kHz waveform.
o. Alternately switch TI between 108.00 and 117.95 MHz while adjusting the resistor substitution box to obtain a power meter reading of +12 ±1 dB mW at both frequencies.
p. Record resistor substitution box reading that produces output closest to +12 dB mW as test select A4A3R4.
q. Disconnect resistor substitution box and reconnect it across A4A3C50 and A4A3C53.
r. Set TI to 332.00 MHz. Adjust resistor substitution box until power meter indicates +12 ±0.2 dB mW. Note resistance value that produces the level closest to 12 dB mW as test select value for A4A3R3.
s. Connect oscilloscope to A4A1A1Q4 collector and observe 25 kHz waveform.
t. If necessary, adjust A4A3C34 and A4A3L12 to obtain a 95-percent duty cycle of the 25-kHz waveform.
u. Alternately switch TI between 329.150 and 335.000 MHz and verify a power meter reading of +12 ±0.4 dB mW at both frequencies.
v. Press TI POWER switch to OFF.
w. Select resistor values for A4A3R3, R4, and R5 from test select resistor kit list (1 to 15 kΩ), Collins part number 637-4321-001, closest to the recorded values.
x. Install and solder selected resistors.
y. Press TI POWER switch to ON. Set RF LEVEL to -6 dB mW.
z. Sequentially select TI frequencies of 75.000, 108.000, 117.95, 329.15, and 335.00 MHz. Verify power meter indicates +12 ±1 dB mW at 75.000, 108.000, and 117.95 MHz, and +12 ±0.5 dB mW at 329.15 and 335.00 MHz.
aa. Press TI POWER switch to OFF.
ab. Disconnect power meter and connect step attenuator (2.5) to synthesizer connector P2. Connect spectrum analyzer (2.1) to step attenuator.
ac. Set step attenuator to 20 dB.
ad. Press TI POWER switch to ON. Set RF LEVEL to -6 dB mW.
ae. Sequentially select TI frequencies of 75.000, 108.000, and 335.000 MHz. Verify that second and third harmonics are at least 30 dB below carrier at 75.000 and 108.000 MHz, and at least 25 dB below carrier at 335.000 MHz.
af. Press TI POWER switch to OFF and disconnect test equipment.
ag. Reassemble and reinstall synthesizer assembly A4/rf modulator assembly A3 as described in paragraphs 6.2.5.a.11 and 6.2.5, steps c through f.

8.12 Synthesizer Regulator-Divider Board A4A1A1 Alignment

Note

Do not perform these alignment procedures unless regulator-divider board A4A1A1 has been replaced with a new assembly.

a. Remove rf modulator assembly A3 and synthesizer assembly A4 from TI as described in disassembly/assembly paragraph 6.1.6, steps a through d.
b. Connect rf module extender cable (2.24) to TI wiring harness connector P5 and rf modulator assembly connector A3A3J4.
c. Remove synthesizer assembly A4 cover as described in paragraph 6.1.7.g.
d. Connect resistor substitution box (2.23) across A4A1A1R7 terminals. Refer to figure 34 for test connection location.
e. Set TI POWER switch to ON. Set TI to 108.000 MHz with 30-Hz VAR and 9960-FM modulation tones off. Set RF LEVEL to -6 dB mW.
f. Connect dvm (2.2) to A4P1-A1.
g. Press TI ΔF key. Press and hold TI FAST INCR key until dvm indicates 20 ±0.05 V dc. Adjust decade resistance box until displayed frequency is greater than 08 032.4 kHz.
h. Press and hold TI FAST DECR key until dvm indicates 2 ±0.05 V dc. Adjust decade resistance box until displayed frequency is less than 07 967.6 kHz.
i. Repeat steps g and h until upper and lower frequency results are met.
j. Record resistor substitution box setting as test select value for A4A1A1R7.
k. Press TI POWER switch to OFF and disconnect test equipment.
l. Select resistor value for A4A1AR7 from test select resistor kit list (46.4 to 110 kΩ), Collins part number 638-1123-001, closest to value recorded in step j.
m. Install and solder selected resistor across A4A1A1R7 terminals.
n. Replace synthesizer A4 cover as described in paragraph 6.2.5.a.11, and reinstall rf modulator assembly A3 and synthesizer assembly A4 into TI, as described in assembly paragraph 6.2.5, steps e and f.

8.13 RF Amplifier A4A2 Alignment

Note

Do not perform these alignment procedures unless rf amplifier A4A2 has been repaired or replaced with a new assembly. Do not perform any adjustments other than those listed.

a. Remove and disassemble rf modulator assembly A3 and synthesizer assembly A4 to the extent described in disassembly/assembly paragraph 6.1.7, steps a through g.
b. Connect rf module extender cable (2.24) to TI wiring harness connector P5 and rf modulator assembly connector A3A3J4.
c. Connect synthesizer module extender cable (2.27) to synthesizer assembly connector P1 and rf modulator assembly connector A3A2J1.
d. Unsolder R17 and R18 from E7 on A4A3. Solder both resistors to the center conductor of an 8" piece of RG316 coax and solder the coax shield to GND 3 on A4A3. The remaining end of the coax should have a coax connector suitable for hookup with the sweep generator.
e. Connect sweep generator to spectrum analyzer as shown in figure 56. Adjust the sweep generator to obtain an 8 ±0.2 dB-mW output between 75 and 335 MHz on the spectrum analyzer. Record sweep generator output linearity for comparison against the rf amp output.

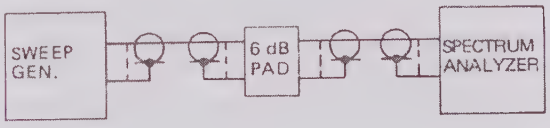

TP5-6564-011

A4A2 Alignment Test Equipment, Calibration Setup Diagram
Figure 56

f. Leave sweep generator and spectrum analyzer settings the same as in step e. Connect equipment as shown in figure 57.

g. Turn TI on. After TI has completed initial self-test, turn rf off by pushing RF ON/OFF button on front panel.

Note

Step h applies to A4A2 assemblies with CPN 637-2718-001 only. Step i applies to A4A2 assemblies with CPN 634-9681-001 only.

h. Adjust C4, C12, and C14 to obtain a flat frequency response between 75 and 335 MHz at an 8 ±5-dB mW output level. Use actual sweep generator output obtained in step e as a reference level when making these adjustments.

Note

C14 should be used to adjust output level over entire frequency range. However, after C14 adjustment it may be necessary to adjust C4 and C12 also, to ensure flatness over the entire frequency range.

i. Adjust C1, C2, C10, and C11 to obtain a flat frequency response between 75 and 335 MHz at an 8 ±0.5-dB mW output level. Use the actual sweep generator output obtained in step e as a reference level when making these adjustments.

Note

C1 should be used to adjust output level over entire frequency range. However, after C1 adjustment it may be necessary to adjust C2, C10, and C11 to ensure flatness over the entire frequency range.

j. Turn TI POWER switch to off and disconnect test equipment.

k. Unsolder coax from R17, R18, and GND 3. Reconnect and solder R17 and R18 to E7 on A4A3.

l. Replace synthesizer A4 cover as described in paragraph 6.2.5.a.11, and reinstall rf modulator assembly A3 and synthesizer assembly A4 into TI, as described in assembly paragraph 6.2.5, steps c through f.

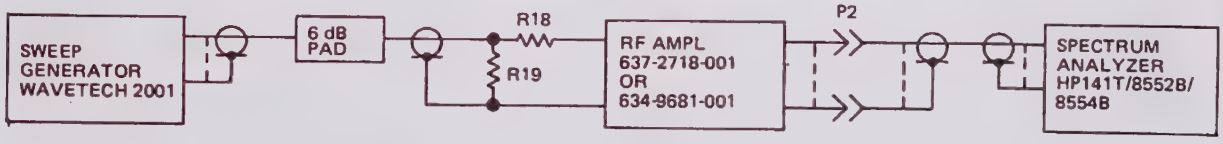

TP5–6570–011

A4A2 Alignment Test Equipment, Setup Diagram
Figure 57

Collins 479S-6A VOR/ILS Signal Generator

Rockwell International

calibration verification

Collins Government Avionics Division

Printed in USA

523-0768886-101118
1 September 1978
1st Revision, 15 October 1980

table of contents

Paragraph *Page*

1. Introduction and Calibration Verification Description 1

2. Measuring and Support Equipment Requirements 1

3. Preliminary Operations 14

3.1 Introduction 14
3.2 Turn-On Operation 14
3.3 Self-Test Operation 14

4. Calibration Verification Process 14

4.1 Introduction 14
4.2 Periodic Calibration Verification Procedures 15
4.2.1 Frequency Range 15
4.2.2 Frequency Accuracy 16
4.2.3 Frequency Vernier 16
4.2.4 Harmonics/Spurious Signals 17
4.2.5 RF Output Level 18
4.2.6 Modulation Tones Frequency Accuracy 21
4.2.7 Modulation Tones Distortion 21
4.2.8 VOR Tones 21
4.2.9 Localizer DDM 24
4.2.10 Glideslope DDM 24
4.2.11 AM Modulation 25
4.3 Supplemental Calibration Verification Procedures 31
4.3.1 Spurious Signals 31
4.3.2 Broadband Noise (SSB) and Close-In Spurious Signals 31
4.3.3 ILS Phase (90/150-Hz Composite Signal) 33
4.3.4 9960-FM Deviation Verification 35

5. Calibration Verification Checklist/Data Form 35

List of Effective Pages

*The asterisk indicates pages changed, added, or deleted by the current change.

Page No	Issue
*Title	15 Oct 80
*List of Effective Pages	15 Oct 80
1 thru 17	1 Sep 78
*18	15 Oct 80
19 thru 20	1 Sep 78
*21	15 Oct 80
22 thru 25	1 Sep 78
*26	15 Oct 80
27 thru 45	1 Sep 78
*46	15 Oct 80
47 thru 50	1 Sep 78

Record of Revisions

RETAIN THIS RECORD IN THE FRONT OF MANUAL.
ON RECEIPT OF REVISIONS, INSERT REVISED PAGES IN THE MANUAL,
AND ENTER DATE INSERTED AND INITIALS.

REV NO	REVISION DATE	INSERTION DATE/BY	SB NUMBER INCLUDED	REV NO	REVISION DATE	INSERTION DATE/BY	SB NUMBER INCLUDED
1st Ed	1 Sep 78		None				
1	15 Oct 80		1 thru 10				

calibration verification

1. INTRODUCTION AND CALIBRATION VERIFICATION DESCRIPTION

The calibration verification procedures contain the detailed information necessary for an experienced calibration technician to perform the calibration verification process. The technician is assumed to be familiar with the 479S-6A, the specified test equipment, and general metrology techniques, terminology, and definitions.

It is recommended that the calibration verification process be performed at 6-month intervals until calibration history in the user's environment indicates that a shorter or longer interval should be assigned.

The following nonstandard abbreviations are used throughout this section.

ABBREVIATION	DEFINITION
COMP	Composite
dBc	Decibel below carrier level
DEMOD	Demodulation
D/R	Down/right
MB	Marker beacon
T/F	To/from
TI	Test instrument
U/L	Up/left

The 479S-6A VOR/ILS Signal Generator is referred to as a TI throughout this section.

Table 1 lists calibration verification parameters, performance specifications, and test methods.

2. MEASURING AND SUPPORT EQUIPMENT REQUIREMENTS

Table 2 is a list of test equipment required to verify calibration of the signal generator. The table provides an equipment item number, equipment nomenclature, minimum use specifications, and a representative type. The item number is used in the calibration verification procedure to identify the equipment used. The minimum use specifications are the principal parameters on which calibration integrity is based. The representative type of equipment listed meets the minimum use specifications. Alternate equipment may be used if it meets or exceeds minimum use specifications.

Items 2.19 through 2.23 (listed under ADDITIONAL REQUIRED TEST EQUIPMENT FOR SUPPLEMENTAL CALIBRATION VERIFICATION PROCEDURES) are required if the supplemental calibration verification procedures are to be performed.

Table 1. Calibration Verification Description.

ITEM	TEST INSTRUMENT PARAMETER	PERFORMANCE SPECIFICATIONS	NOTES	TEST METHOD
1.1	Rf output			
1.1.1	Frequency range			TI display is observed as various output frequencies are selected.
1.1.1.1	Marker beacon	74.60 to 75.40 MHz in 25-kHz steps.		
1.1.1.2	VOR/LOC	108.00 to 117.95 MHz in 50-kHz steps.		

Table 1. Calibration Verification Description (Cont).

ITEM	TEST INSTRUMENT PARAMETER	PERFORMANCE SPECIFICATIONS	NOTES	TEST METHOD
1.1.1.3	Glideslope	329.15 to 335.00 MHz in 150-kHz steps.		
1.1.1.4	Vhf communications	118.00 to 151.975 MHz in 25-kHz steps.		
1.1.2	Frequency vernier	>±1 channel spacing.		Measured with frequency counter at RF OUT.
1.1.3	Frequency accuracy	< ±2 ppm, +10 to +40 °C (+50 to +104 °F) including aging, after calibration at 25 °C (+77 °F).		Measured with frequency counter at RF OUT.
1.1.4	Spectral purity			
1.1.4.1	Harmonics			Measured with spectrum analyzer.
	VOR/LOC/MB	>30 dB below carrier level.		
	Glideslope	>25 dB below carrier level.		
1.1.4.2	Spurious levels	>80 dBc > ±15 kHz from carrier.	1, 3	Measured with spectrum analyzer.
1.1.4.3	Broadband noise (SSB)		1, 3	Rf output of TI is mixed down to center frequency of a narrow-band notch filter that is used to reject TI fundamental frequency and pass TI sideband noise. Noise from filter is measured with spectrum analyzer.
	74.60 to 75.40 MHz	>115 dBc/Hz > ±40 kHz from carrier.		
	108.00 to 117.95 MHz	>111 dBc/Hz > ±15 kHz from carrier.		
		>117 dBc/Hz > 30 kHz from carrier.		
		>122 dBc/Hz > ±40 kHz from carrier.		
	329.15 to 335.00 MHz	>112 dBc/Hz > ±50 kHz from carrier.		
		>119 dBc/Hz > ±80 kHz from carrier.		
		>122 dBc/Hz > ±120 from carrier.		
1.1.5	Rf output level			Measured with power meter down to -20 dB mW; below -20 dB mW, by rf substitution with standard attenuator using spectrum analyzer.
1.1.5.1	Range	dB mW: -6 to -120 dB mW variable in 1-dB steps.		
		Voltage: 112 000 to 0.22 μV variable in 1-dB steps.	2	

Table 1. Calibration Verification Description (Cont).

ITEM	TEST INSTRUMENT PARAMETER	PERFORMANCE SPECIFICATIONS	NOTES	TEST METHOD
1.1.5.2	Accuracy	-6 to -60 dB mW: ±1.5 dB -60 to -120 dB mW: ±2.0 dB	3	
1.2	Modulation tones			
1.2.1	Frequency accuracy			Measured with frequency counter.
1.2.1.1	30 Hz ref	±0.005%		
1.2.1.2	30 Hz var	±0.005%		
1.2.1.3	90 Hz	±0.005%		
1.2.1.4	150 Hz	±0.005%		
1.2.1.5	400 Hz	±0.005%		
1.2.1.6	1020 Hz (ident)	±0.005%		
1.2.1.7	1300 Hz	±0.005%		
1.2.1.8	3000 Hz	±0.005%		
1.2.1.9	9960 Hz	±0.005%		
1.2.1.10	Aux audio, MB (100 Hz to 4 kHz)	±0.005%		
1.2.1.11	Aux audio, VOR (30 Hz to 14 kHz)	±0.005%		
1.2.1.12	Aux audio, LOC (30 Hz to 4 kHz)	±0.005%		
1.2.1.13	Aux audio, COMM (30 Hz to 10 kHz)	±0.005%		
1.2.1.14	Aux audio, GS (30 Hz to 4 kHz)	±0.005%		
1.2.2	Distortion			
1.2.2.1	Audio			Measured with distortion analyzer.
1.2.2.1.1	VOR-preset mode (30% modulation)			
	30 Hz ref	<0.25%		
	30 Hz var	<0.25%		
	1020 Hz ident	<0.5%		
	9960 Hz	<0.5%		
	Aux audio	<1.0%		

Table 1. Calibration Verification Description (Cont).

ITEM	TEST INSTRUMENT PARAMETER	PERFORMANCE SPECIFICATIONS	NOTES	TEST METHOD
1.2.2.1.2	VOR-variable mode (5 to 35% modulation)			
	30 Hz var	<1.0%		
	9960 Hz	<1.5%		
	Aux audio	<2.0%		
1.2.2.1.3	LOC-preset mode			
	90/150 Hz (20% modulation)	<0.25%		
	1020 Hz ident (30% modulation)	<0.5%		
	Aux audio (30% modulation)	<1.0%		
1.2.2.1.4	LOC-variable mode			
	90/150 Hz (5 to 40% modulation)	<1.0%		
	Aux audio (5 to 30% modulation)	<1.5%		
1.2.2.1.5	GS-preset mode			
	90/150 Hz (40% modulation)	<0.25%		
	Aux audio (30% modulation)	<1.0%		
1.2.2.1.6	GS-variable mode			
	90/150 Hz (10 to 80% modulation)	<1.0%		
	Aux audio (10 to 60% modulation)	<1.5%		
1.2.2.1.7	Marker beacon preset (95% modulation)			
	400 Hz	<1.0%		
	1300 Hz	<1.0%		
	3000 Hz	<1.0%		
	Aux audio (15 to 97% modulation)	<1.0%		
1.2.2.1.8	Vhf COMM			
	30 Hz to 10 kHz (5 to 35% modulation)	<2.0%		

Table 1. Calibration Verification Description (Cont).

ITEM	TEST INSTRUMENT PARAMETER	PERFORMANCE SPECIFICATIONS	NOTES	TEST METHOD
1.2.2.2	Modulation			
1.2.2.2.1	VOR-preset mode (30% modulation)			
	30 Hz var	<1.0%		
	1020 Hz ident	<1.0%		
	9960 Hz	<1.5%		
	Aux audio	<2.0%		
1.2.2.2.2	VOR-variable mode (5 to 35% modulation)			
	30 Hz var	<1.5%		
	9960 Hz	<2.0%		
	Aux audio	<3.0%		
1.2.2.2.3	LOC-preset mode			
	90/150 Hz (20% modulation)	<1.0%		
	1020 Hz ident (30% modulation)	<1.0%		
	Aux audio (30% modulation)	<1.5%		
1.2.2.2.4	LOC-variable mode			
	90/150 Hz (5 to 40% modulation)	<1.5%		
	Aux audio (5 to 30% modulation)	<3.0%		
1.2.2.2.5	GS-preset mode			
	90/150 Hz (40% modulation)	<1.0%		
	Aux audio (30% modulation)	<2.0%		
1.2.2.2.6	GS-variable mode			
	90/150 Hz (10 to 80% modulation)	<2.0%		
	Aux audio (10 to 60% modulation)	<3.0%		
1.2.2.2.7	Marker beacon preset (95% modulation)			
	400 Hz	<4.0%		
	1300 Hz	<4.0%		
	3000 Hz	<4.0%		
	Aux audio (15 to 97% modulation)	<5.0%		

Table 1. Calibration Verification Description (Cont).

ITEM	TEST INSTRUMENT PARAMETER	PERFORMANCE SPECIFICATIONS	NOTES	TEST METHOD
1.2.2.2.8	EXT MOD			
	(Variable to 90%)	<4.0%		
1.2.3	ILS phase (90/150-Hz composite signal)		1	Measured with oscilloscope at TI COMP output.
1.2.3.1	Fixed	0 ±1°		
1.2.3.2	Selectable	60 ±2°		With respect to 150-Hz signal. Refer to para 4.3.3.
1.2.4	VOR tones			
1.2.4.1	9960 FM deviation	480 ±2-Hz peak.	1	Measure with computing counter at TI COMP output.
1.2.4.2	Radial range	000.00 to 359.99° (selectable in 0.01°-increments and at every 30°, variable in preset steps of ±30°-, ±10°-, and ±0.01°-increments).		Functionally verified by observing TI display.
1.2.4.3	Radial accuracy		1	Measured with a VOR bearing standard with tracking capability. (Alternate method uses VOR bearing standard at 0°, and phasemeter between TI AUX and COMP outputs from 0 to 360°.)
	Audio	±0.01° of selected radial.		
	Demodulated rf	±0.05° of selected radial.		
1.2.5	LOC DDM			
1.2.5.1	Variable range	0.000 to 0.400 DDM in 0.001 increments.		Functionally verified by observing TI display.
1.2.5.2	Preset settings	0.000, ±0.046, ±0.093, ±0.155, and ±0.200 DDM		
1.2.5.3	Accuracy			Since DDM's are generated digitally and do not depend on precision resistors, only the glideslope DDM's are verified.
	Audio (on course)	0.0001 DDM		
	Audio (off course)	0.0002 to .200 DDM; 0.0002 +0.05% DDM from 0.201 to 0.375 DDM; 0.25% DDM max from 0.376 to 0.400 DDM.		
	Rf (on course)	0.00056 DDM		
	Rf (off course)	0.00056 DDM +2.5% DDM		

Table 1. Calibration Verification Description (Cont).

ITEM	TEST INSTRUMENT PARAMETER	PERFORMANCE SPECIFICATIONS	NOTES	TEST METHOD
1.2.6	GS DDM			
1.2.6.1	Variable range	0.000 to 0.800 DDM in 0.001 increments.		Functionally verified by observing TI display.
1.2.6.2	Preset settings	0.000, ±0.045, ±0.091, ±0.175, and ±0.400 DDM.		Functionally verified by observing display.
1.2.6.3	Accuracy			Measured with true rms differential voltmeter at TI COMP output.
	Audio (on course)	0.0001 DDM		
	Audio (off course)	0.002 to 0.400 DDM; 0.002 +0.05% DDM from 0.401 to 0.750 DDM; 0.25% DDM max from 0.751 to 0.800 DDM.		
	Rf (on course)	0.00102 DDM		Measured with true rms differential voltmeter at TI DEMOD output.
	Rf (off course)	0.00102 +2.5% DDM		Verified by audio DDM and AM modulation measurements.
1.3	AM modulation			A modulation meter is used to measure percent AM or a spectrum analyzer is used as linear detector to detect modulated rf. Detected ac and dc signals are measured with dvm and ac true rms voltmeter to determine percent modulation.
1.3.1	Range			
1.3.1.1	VOR			
	30 Hz var/ 9960 Hz	Preset to 30%. Variable 5 to 35% in 0.1% increments.		
	1020 Hz (ident)	30% fixed.		
	Aux audio	Preset to 30%. Variable 5 to 35% in 0.1% increments.		
1.3.1.2	LOC			
	90/150 Hz	Preset to 20%. Variable (on course only) 5 to 40% in 0.1% increments.		
	1020 Hz (ident)	30% fixed.		
	Aux audio	Preset to 30%. Variable 5 to 30% in 0.1% increments.		

Table 1. Calibration Verification Description (Cont).

ITEM	TEST INSTRUMENT PARAMETER	PERFORMANCE SPECIFICATIONS	NOTES	TEST METHOD
1.3.1.3	GS			
	90/150 Hz	Preset to 40%. Variable (on course only) 10 to 80% in 0.1% increments.		
	Aux audio	Preset to 30%. Variable 10 to 60% in 0.1% increments.		
1.3.1.4	MB			
	400/1300/ 3000-Hz	Preset to 95%. Variable 15 to 97% in 0.1% increments.		
	Aux audio	Preset to 95%. Variable 15 to 97% in 0.1% increments.		
1.3.1.5	EXT MOD	Variable to 90%.		
1.3.2	Accuracy			
1.3.2.1	VOR-preset mode (30% modulation)			
	1020 Hz, 30-Hz var, 9960 Hz	±2.5% of indicated modulation.		
	Aux audio	±5% of indicated modulation.		
1.3.2.2	VOR-variable mode (5 to 35% modulation)			
	30 Hz var/ 9960 Hz	±5% of indicated modulation.		
	Aux audio	±7% of indicated modulation.		
1.3.2.3	LOC-preset mode			
	90/150 Hz (20% modulation)	±2.5% of indicated modulation.		
	1020-Hz ident (30% modulation)	±2.5 of indicated modulation.		
	Aux audio	±5% of indicated modulation.		
1.3.2.4	LOC-variable mode			
	90/105 Hz (5 to 40% modulation)	±5% of indicated modulation.		
	Aux audio (5 to 30% modulation)	±7% of indicated modulation.		

Table 1. Calibration Verification Description (Cont).

ITEM	TEST INSTRUMENT PARAMETER	PERFORMANCE SPECIFICATIONS	NOTES	TEST METHOD
1.3.2.5	GS-preset mode			
	90/150 Hz (40% modulation	±2.5% of indicated modulation.		
	Aux audio (30% modulation	±5% of indicated modulation.		
1.3.2.6	GS-variable mode			
	90/150 Hz (10 to 80% modulation)	±5% of indicated modulation.		
	Aux audio (10 to 60% modulation)	±7% of indicated modulation.		
1.3.2.7	Marker beacon-preset mode (95% modulation)			
	400, 1300 and 3000 Hz	±5% of indicated modulation.		
	Aux audio	±6.5% of indicated modulation.		
1.3.2.8	Marker beacon-variable mode (15 to 97% modulation)			
	400, 1300, and 3000 Hz	±5.5% of indicated modulation.		
	Aux audio	±7% of indicated modulation.		

Note

1. Parameter need be checked only when a problem is suspected, or after repair at the discretion of the user.
2. When the 479S-6A is selected to display μV's, the rf output is "hard microvolts." This eliminates the need for an external 6-dB attenuator.
3. VOR/LOC/GS and marker beacon frequencies only.
4. Referenced to the accuracy of the standard used in calibration.

Table 2. Required Test Equipment.

ITEM	EQUIPMENT	MINIMUM USE SPECIFICATIONS	REPRESENTATIVE TYPE
2.1	Spectrum analyzer	Frequency: 8 to 1250 MHz. If bandwidth: Selectable 300 Hz to 300 kHz. Scan width: Zero scan and selectable ranges 2 kHz to 100 MHz/division. Sensitivity (average noise level): < -102 dB mW with 10-kHz if bandwidth. Display mode: Selectable 10 or 2 dB/division and linear. Video filter, selectable: Off (>500 kHz), 10 kHz, 100 Hz, and 10 Hz. Vertical output: Provides linear detected output. Calculated dc offsets derived from ±10-dB rf input level changes from a reference -200-mV dc vertical output level must be equal within 2 mV.	Hewlett-Packard 141T/8552B/8554B ***Note*** Special calibration is required if modulation meter (item 2.17) is not available, to ensure the vertical output linearity specification. The spectrum analyzer and plug-ins must be calibrated as a system to determine if the spectrum analyzer vertical output linearity meets the test requirements. Calibration verification paragraph 4.2.11.2 provides a calibration procedure to determine this parameter. Hewlett-Packard 8554B, Opt E58 (includes 141T/8554B Opt H58/8552B Opt H58) is available from Hewlett-Packard as a precalibrated system.
2.2	Digital voltmeter	Dc voltage range: 0 to 1 V. Accuracy: ±(0.02% reading +0.1 mV).	Fluke 8600A ***Note*** Not required if modulation meter (item 2.17) is available.
2.3	True rms differential voltmeter	True rms responding. Ac voltage range: 5 mV to 1.2 V. Accuracy: ±0.2% reading, 30 to 9960 Hz. Voltage ratio accuracy, 1-V range between 0.2 and 0.8 V: ±0.015% at 90 and 150 Hz.	Fluke 931B ***Note*** Special measurements are required to ensure voltage ratio accuracy specification.
2.4	Power meter	Frequency: 74 to 335 MHz. Range: -20 to 0 dB mW full scale, selectable 5-dB steps. Accuracy: ±5% full scale. Vswr: <1.3:1	Hewlett-Packard 435A/8482A
2.5 (Cont)	Step attenuator	Frequency: 8 to 108 MHz. Range: 0 to 60 dB in 10-dB steps. Vswr: 1.20 max.	Hewlett-Packard 355D

Table 2. Required Test Equipment (Cont).

ITEM	EQUIPMENT	MINIMUM USE SPECIFICATIONS	REPRESENTATIVE TYPE
2.5 (Cont)		Attenuation accuracy: 8 to 11 MHz, change in attenuation from 0 to 60 dB known within ±0.5 dB. 30 MHz, attenuation change between 10-, 20-, and 30-dB steps known within 0.02 dB. 108 MHz, attenuation change of each step from 0 to 40 dB known within ±0.2 dB.	*Note* Special calibration data required for attenuation accuracy requirements. The 8- to 11-MHz requirements are required only to perform supplemental calibration verification procedures described in paragraph 4.3.2. *Note* 30-MHz calibration data not required if modulation meter (item 2.17) is available.
2.6	Distortion analyzer	Frequency: 30 to 14 kHz. Full-scale ranges: 0.3, 1, 3, and 10%. Accuracy: ±3% full scale. Voltmeter: Used as null indicator at 30 Hz; sensitivity 10 mV.	Hewlett-Packard 331A
2.7	Frequency counter	Frequency: 30 Hz to 345 MHz. Accuracy: ±0.3 ppm, 75 to 345 MHz; ±10 ppm, 30 Hz (33333.33 μs).	Dana 8030B
2.8	Oscilloscope	Frequency: Dc to 100 kHz. Deflection factor: 0.1 V to 5 V/division. Deflection accuracy: ±3%. Calibrator: 300 mV ±1%. Sweep modes: Main, delayed. Horizontal time base: 5 μs to 50 ms/division (selectable in 1, 2, and 5 sequence). Sweep accuracy: ±1%, 5 μs to 5 ms/division; ±2%, 10 to 50 ms/division.	Tektronix 475
2.9	VOR bearing standard	Accuracy: See note in paragraph 4.2.8.3.	Collins 478A-3
2.10	Rf amplifier (two required)	Frequency: 8 to 110 MHz. Gain: 20 dB min. Noise figure: <5 dB. Vswr: <1.7	Hewlett-Packard 8447A

Table 2. Required Test Equipment (Cont).

ITEM	EQUIPMENT	MINIMUM USE SPECIFICATIONS	REPRESENTATIVE TYPE
2.11	Signal generator	Frequency: 30 to 345 MHz. Output level: Variable, +7 to -60 dB mW. Close-in/broadband noise: See second note in paragraph 4.3.2.	Hewlett-Packard 8640B *Note* If modulation meter (item 2.17) is available, rf generator is required only for supplemental tests.
2.12	Attenuator (two required)	Frequency: 30 MHz. Loss: 10 ±0.5 dB. Vswr: <1.05.	Weinschel 1A-10 *Note* Special calibration is required to ensure vswr specification.
2.13	Attenuator	Frequency: 108 MHz. Loss: 3 ±0.5 dB. Vswr: <1.20.	Weinschel 1A-3
2.14	Attenuator	Frequency: 108 MHz. Loss: 6 ±0.5 dB. Vswr: <1.20.	Weinschel 1A-6
2.15	Phasemeter	Frequency: 30 Hz. Absolute accuracy: 0.05° from 0.00 to 359.99°.	Krohn-Hite 6500 *Note* Not required if Collins 478A-3 VOR bearing standard (item 2.9) is available.
2.16	Resistive divider	Input/output voltage ratio: 2/1 Voltage rating: 2 V min. Input resistances: 94 kilohms ±10%.	Constructed using two 47-kilohm, 1/4-watt, 10% resistors.
2.17 (Cont)	Modulation meter	Frequency range: 75 to 335 MHz. Input sensitivity: -6 dB mW. Amplitude modulation accuracy at <10 or >95% AM: ±3% of reading. 10 to 95% AM: ±2% of reading. 20 to 40% AM: ±0.7% of reading.	Boonton 82AD *Note* AM modulation performance exceeds the manufacturer's quoted specification; however, measurement data indicates that the unit will meet these required accurates.

Table 2. Required Test Equipment (Cont).

ITEM	EQUIPMENT	MINIMUM USE SPECIFICATIONS	REPRESENTATIVE TYPE
2.17 (Cont)		Note AM accuracy from 20 to 40% assumes the following conditions: a. Measurement bandwidth: 10 Hz to 15 kHz b. Temperature: 25 ±10 °C c. Rf input level: 100 mV to 1 volt Detected audio distortion: <0.2% for 30% AM; <0.7% for 90% AM.	
2.18	Audio oscillator	Frequency: 150 Hz Output amplitude: 0 to >3 V rms into 600 ohms. Distortion: <0.5%.	Hewlett-Packard 200CD
ADDITIONAL REQUIRED TEST EQUIPMENT FOR SUPPLEMENTAL CALIBRATION VERIFICATION PROCEDURES			
2.19	Computing counter	Capable of measuring within 1 Hz, 960-Hz peak-to-peak deviation of a 9960-Hz signal that is being frequency modulated with a 30-Hz tone.	Hewlett-Packard 5360A/5365A/5375A
2.20	Mixer	Frequency: 75 to 345 MHz. If output: 8 to 12 MHz.	Hewlett-Packard 10514A
2.21	Notch filter	Center frequency: 10.00 MHz. 40-dB notch width: 3 kHz min. 1-dB notch width: ±11 kHz max. Bandpass flatness: ±1 dB from ±11 to ±300 kHz from center frequency.	McCoy Electronics 2B554
2.22	Low-pass filter	Single-pole RC filter. 3-dB cutoff frequency: 23.5 kHz (nominal).	Constructed using 10-kilohm, 1/4-watt, 10% resistor and 680-pF, 50-V dcw, 10% capacitor.
2.23	Tunable notch filter	Frequency: 74.6 to 75.4 MHz, 108.00 to 117.95 MHz, and 329.15 to 335.00 MHz. Notch attenuation: 30 dB. 3-dB bandwidth: 5 MHz nominal.	K and L Microwave 3TNF-50/100-5N 3TNF-100/200-5N 3TNF-200/400-5N

3. PRELIMINARY OPERATIONS

3.1 Introduction

The calibration verification process should be performed under the following environmental conditions: temperature, +10 to +40 °C (+50 to +104 °F); relative humidity, 95 percent maximum.

Environmental conditions must be met in order to obtain the specifications listed in table 1 and the results contained in the calibration verification procedures described in paragraph 4.

Before performance of calibration verification procedures, the technician should become familiar with the procedures that are to be performed.

3.2 Turn-On Operation

Press TI POWER switch to ON. TI display must be in standard VOR mode condition as shown in figure 1.

3.3 Self-Test Operation

a. Press and hold TI SELF TEST switch. TI display must be as shown in figure 2.
b. Release SELF TEST switch. RDL/DDM/MOD display must sequentially count through a memory output (ROM) check.
c. Upon completion of the self-test cycle, the TI display must return to standard VOR mode condition (figure 1).

4. CALIBRATION VERIFICATION PROCESS

4.1 Introduction

The calibration verification procedures contained in this paragraph verify that the 479S-6A is correctly calibrated and within performance specifications. All results obtained during performance of the procedures may be recorded on checklist/data forms in order to maintain a calibration history for the TI, if so desired. Recommended checklist/data forms are shown in table 4. The calibration verification procedures are divided into two parts, periodic and supplemental. The periodic calibration verification procedures should be performed at every calibration interval; they are required to ensure that the TI is operating correctly within the performance specifications. The supplemental calibration verification procedures should be performed only when a problem is suspected in the area the verification procedure checks, or after repair, at the discretion of the using organization.

After performance of the procedures, all incorrect results must be corrected using procedures contained in the maintenance section.

The number in parentheses following the support (test) equipment is the item number of equipment listed in table 2, which specifically identifies the equipment.

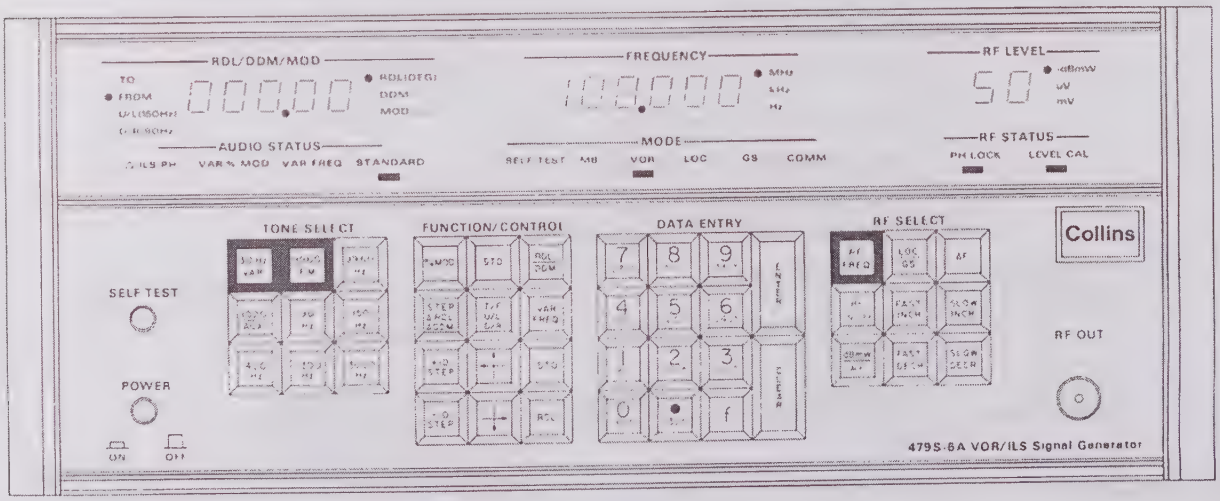

Standard VOR Mode Display
Figure 1

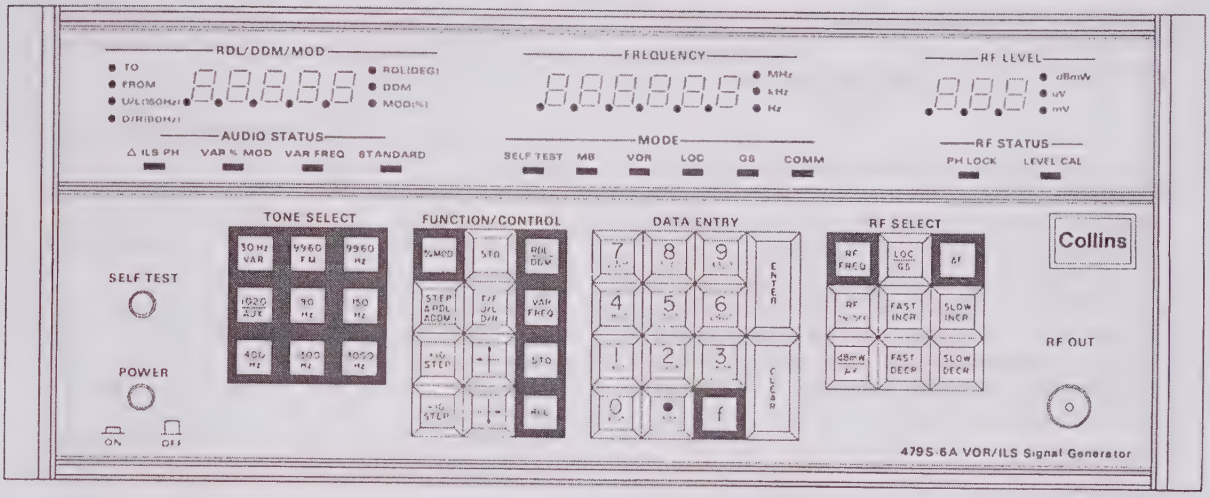

Self-Test Mode Display
Figure 2

4.2 Periodic Calibration Verification Procedures

Note

Performance of the procedures in this paragraph is required at each calibration interval to ensure that the TI is operating within the performance specifications.

4.2.1 Frequency Range

a. Set TI rf output level to -50 dB mW and sequentially select TI frequencies of 74.60, 75.00 (marker beacon), and 75.40 MHz. TI display status must be as follows:

DISPLAY	INDICATION
RDL/DDM/MOD	95.0 MOD(%)
AUDIO STATUS	STANDARD
FREQUENCY	(Frequency selected) MHz
MODE	MB
RF LEVEL	50 -dBmW
RF STATUS	PH LOCK, LEVEL CAL
TONE SELECT	400 Hz
FUNCTION/ CONTROL	No keys lit
DATA ENTRY	No keys lit
RF SELECT	RF FREQ

b. Sequentially select TI VOR frequencies of 108.00, 113.70, and 117.95 MHz. TI display status must be as follows for each selected frequency:

DISPLAY	INDICATION
RDL/DDM/MOD	FROM, 000.00 RDL(DEG)
AUDIO STATUS	STANDARD
FREQUENCY	(Frequency selected) MHz
MODE	VOR
RF LEVEL	50 -dBmW
RF STATUS	PH LOCK, LEVEL CAL

DISPLAY	INDICATION
TONE SELECT	30 Hz VAR, 9960 FM
FUNCTION/ CONTROL	No keys lit
DATA ENTRY	No keys lit
RF SELECT	RF FREQ

c. Sequentially select TI LOC frequencies of 108.10, 110.10, and 111.95 MHz. TI display status must be as follows for each selected frequency:

DISPLAY	INDICATION
RDL/DDM/MOD	U/L(150 Hz), .000 DDM
AUDIO STATUS	STANDARD
FREQUENCY	(Frequency selected) MHz
MODE	LOC
RF LEVEL	50 -dBmW
RF STATUS	PH LOCK, LEVEL CAL
TONE SELECT	90 Hz, 150 Hz
FUNCTION/ CONTROL	No keys lit
DATA ENTRY	No keys lit
RF SELECT	RF FREQ

d. Sequentially select TI GS frequencies of 329.15, 332.15, and 335.00 MHz. TI display must be as described in step c except for MODE status, which will indicate GS.
e. Sequentially select TI LOC frequencies of 108.10, 110.10, and 111.95 MHz and press RF SELECT — LOC/GS key. TI display must change to paired GS frequencies of 334.70, 334.40, and 330.95 MHz, respectively.
f. Sequentially select TI COMM frequencies of 118.000, 134.50, and 151.975 MHz. TI display status must be as follows for each selected frequency:

DISPLAY	INDICATION
RDL/DDM/MOD	30.0 MOD(%)
AUDIO STATUS	STANDARD
FREQUENCY	(Frequency selected) MHz
MODE	COMM
RF LEVEL	50 -dBmW
RF STATUS	PH LOCK, LEVEL CAL
TONE SELECT	1020/AUX
FUNCTION/ CONTROL	No keys lit
DATA ENTRY	No keys lit
RF SELECT	RF FREQ

Note

A 30-minute warmup period from initial turn-on is required before proceeding with calibration verification procedures.

4.2.2 Frequency Accuracy

a. Connect frequency counter (2.7) to TI RF OUT connector.
b. Set TI for an output frequency of 110.00 MHz without modulation (no TONE SELECT keys lit).
c. Set TI rf output level to -6 dB mW.
d. Counter must indicate between 109.999780 and 110.000220 MHz.
e. Disconnect counter from TI.

4.2.3 Frequency Vernier

a. Connect frequency counter (2.7) to TI RF OUT connector.
b. Set TI for an output frequency of 108.000 MHz without modulation (no TONE SELECT keys lit).
c. Set TI rf output level to -6 dB mW and press TI ΔF key for ΔF operation.
d. Counter must indicate between 107.999500 and 108.000500.

e. Press and hold TI SLOW DECR key. TI FREQUENCY indication must decrease. Release key.
f. Press and hold TI FAST DECR key. TI FREQUENCY indication must decrease. Hold FAST DECR key until display counter frequency decreases to at least 107.95 MHz.
g. Press and hold TI SLOW INCR key. TI FREQUENCY indication must increase. Release key.
h. Press and hold TI FAST INCR key. TI FREQUENCY indication must increase. Hold FAST INCR key until display counter frequency increases to at least 108.05 MHz.
i. Set TI for an output frequency of 335.000 MHz without modulation (no TONE SELECT keys lit).
j. Set TI rf output level to -6 dB mW and press TI ΔF key for ΔF operation.
k. TI FREQUENCY display must indicate between 35000.0 and 35001.0.
l. Set the TI for an output frequency of 334.850 MHz.
m. TI FREQUENCY display must indicate between 34850.0 and 35850.2.
n. Counter must indicate between 334.849800 and 334.850200.
o. Disconnect counter from TI.

4.2.4 Harmonics/Spurious Signals

a. Set TI rf output level to -20 dB mW. Connect spectrum analyzer (2.1) to TI RF OUT connector.
b. Set TI to 75.000-MHz marker beacon frequency without modulation (no TONE SELECT keys lit), and observe spectrum analyzer. All harmonic related signals must be greater than 30 dB below carrier level. If any nonharmonic spurious signals are observed, the spurious signals calibration verification procedure described in paragraph 4.3.1 must be performed.
c. Repeat step b for several other VOR, localizer, and glideslope frequencies. Harmonic related signals must be greater than 30 dB below carrier level for VOR/localizer frequencies and greater than 25 dB below carrier level for glideslope frequencies. Refer to table 3 for a list of available frequencies.

Table 3. Standard VOR, ILS (Localizer and Glideslope), and Marker Beacon Frequencies.

VOR FREQUENCIES (MHz)			PAIRED ILS FREQUENCIES		MARKER BEACON AND ADDITIONAL FREQUENCIES (MHz)
			LOCALIZER (MHz)	GLIDESLOPE (MHz)	
108.00	112.70	115.40	108.10	334.70	74.600
108.05	112.75	115.45	108.15	334.55	74.625
108.20	112.80	115.50	108.30	334.10	74.650
108.25	112.85	115.55	108.35	333.95	74.675
108.40	112.90	115.60	108.50	329.90	74.700
108.45	112.95	115.65	108.55	329.75	74.725
108.60	113.00	115.70	108.70	330.50	74.750
108.65	113.05	115.75	108.75	330.35	74.775
108.80	113.10	115.80	108.90	329.30	74.800
108.85	113.15	115.85	108.95	329.15	74.825
109.00	113.20	115.90	109.10	331.40	74.850
109.05	113.25	115.95	109.15	331.25	74.875
109.20	113.30	116.00	109.30	332.00	74.900
109.25	113.35	116.05	109.35	331.85	74.925
109.40	113.40	116.10	109.50	332.60	74.950
109.45	113.45	116.15	109.55	332.45	74.975
109.60	113.50	116.20	109.70	333.20	75.000 (marker beacon)
109.65	113.55	116.25	109.75	333.05	75.025
109.80	113.60	116.30	109.90	333.80	75.050
109.85	113.65	116.35	109.95	333.65	75.075
110.00	113.70	116.40	110.10	334.40	75.100
110.05	113.75	116.45	110.15	334.25	75.125
110.20	113.80	116.50	110.30	335.00	75.150
110.25	113.85	116.55	110.35	334.85	75.175
110.40	113.90	116.60	110.50	329.60	75.200
110.45	113.95	116.65	110.55	329.45	75.225
110.60	114.00	116.70	110.70	330.20	75.250
110.65	114.05	116.75	110.75	330.05	75.275

Table 2. Standard VOR, ILS (Localizer and Glideslope), and Marker Beacon Frequencies (Cont).

VOR FREQUENCIES (MHz)			PAIRED ILS FREQUENCIES		MARKER BEACON AND ADDITIONAL FREQUENCIES (MHz)
			LOCALIZER (MHz)	GLIDESLOPE (MHz)	
110.80	114.10	116.80	110.90	330.80	75.300
110.85	114.15	116.85	110.95	330.65	75.325
111.00	114.20	116.90	111.10	331.70	75.350
111.05	114.25	116.95	111.15	331.55	75.375
111.20	114.30	117.00	111.30	332.30	75.400
111.25	114.35	117.05	111.35	332.15	
111.40	114.40	117.10	111.50	332.90	
111.45	114.45	117.15	111.55	332.75	
111.60	114.50	117.20	111.70	333.50	
111.65	114.55	117.25	111.75	333.35	
111.80	114.60	117.30	111.90	331.10	
111.85	114.65	117.35	111.95	330.95	
112.00	114.70	117.40			
112.05	114.75	117.45			
112.10	114.80	117.50			
112.15	114.85	117.55			
112.20	114.90	117.60			
112.25	114.95	117.65			
112.30	115.00	117.70			
112.35	115.05	117.75			
112.40	115.10	117.80			
112.45	115.15	117.85			
112.50	115.20	117.90			
112.55	115.25	117.95			
112.60	115.30				
112.65	115.35				

4.2.5 RF Output Level

4.2.5.1 Functional Operation

a. Set TI output frequency to 75.000 MHz, and rf output level to -50 dB mW. Delete audio tone.
b. Press TI dBmW/μV key. TI RF LEVEL indication must be 700 μV. Press dBmW/μV key again, and RF LEVEL indication must be 50 -dBmW.
c. Press and hold TI SLOW DECR key. TI RF LEVEL indication must decrease in 1-dB increments.
d. Press and hold TI SLOW INCR key. TI RF LEVEL indication must decrease in 1-dB increments.
e. Press and hold TI FAST DECR key. TI RF LEVEL indication must decrease in 10-dB increments.
f. Press and hold TI FAST INCR key. TI RF LEVEL indication must increase in 10-dB increments.
g. Set TI rf output level to -6 dB mW and press TI RF SELECT — RF ON/OFF key. Observe the following TI displays for proper indication.

DISPLAY	INDICATION
FREQUENCY	------MHz
RF LEVEL	Off
RF STATUS	PH LOCK, LEVEL CAL indicators off

h. Press TI RF SELECT — RF ON/OFF key. Observe the following TI displays for proper indication.

DISPLAY	INDICATION
FREQUENCY	75.000 MHz
RF LEVEL	6 -dBmW
RF STATUS	PH LOCK, LEVEL CAL indicators lit

4.2.5.2 Frequency Response

a. Connect rf power meter (2.4) to TI RF OUT connector.
b. Set TI rf output level to -6 dB mW without modulation (no TONE SELECT keys lit) at frequencies of 74.60, 75.00, 75.40, 108.00, 110.00, 111.95, 114.00, 116.00, 117.95, 329.15, 331.10, 333.50, and 335.00 MHz. Power meter must indicate -6 dB mW within ±0.5 dB at each frequency. Modulation must be removed after each change in frequency. Record power meter indication at 108.00 MHz for later use.

4.2.5.3 Output Attenuator Accuracy

a. Set TI frequency to 108.000 MHz without modulation (no TONE SELECT keys lit).
b. Set TI rf output level to levels listed below. The change in power meter indication from the -6 dB mW level (measured in paragraph 4.2.5.2, step b) must be within limits given.

TI RF LEVEL (dB mW)	CHANGE FROM RDNG AT -6-dB mW SETTING: NOMINAL (dB)	MIN/MAX LIMITS (dB)
-7	-1	0 to -2
-8	-2	-1 to -3
-10	-4	-3 to -5
-14	-8	-7 to -9
-20	-14	-13 to -15 (record measured change for later use)

c. Connect test equipment to TI as shown in figure 3 without rf amplifiers.
d. Make following instrument control settings:

1. TI

CONTROL	SETTING
FREQUENCY	108.00 MHz
RF LEVEL	20 -dBmW
TONE SELECT	No keys lit

2. Step Attenuator (2.5)

CONTROL	SETTING
Attenuation	40 dB

3. Spectrum Analyzer (2.1)

CONTROL	SETTING
Frequency	108.00 MHz
Tuning stabilizer	Off
Bandwidth	10 kHz
Scan width	0.5 MHz
Input attenuation	0 dB
Scan time	10 ms/division
Log reference level	-60 dB mW
Vertical sensitivity	2 dB/division
Video filter	Off
Scan mode	Internal
Scan trigger	Automatic
Display controls	As required

e. Adjust spectrum analyzer frequency control and log reference level attenuators for center screen display of 108.000-MHz signal.
f. Set spectrum analyzer scan width to 200 kHz, tuning stabilizer to on, and adjust frequency control for center screen display.

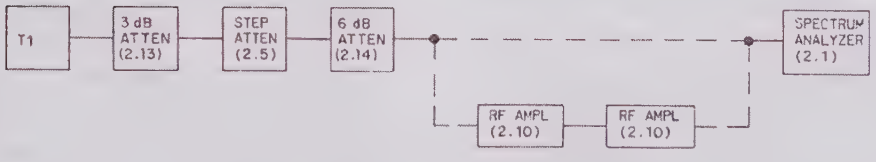

TP5-3313-712

Output Attenuator Accuracy, Equipment Setup
Figure 3

g. Set spectrum analyzer scan width to zero, video filter to 10 kHz, and adjust fine frequency control for maximum vertical trace deflection. Using log reference level attenuators, set reference level for center screen display.

h. Set TI rf output level and step attenuator to the following settings and observe spectrum analyzer display. Record change from reference in + or - values.

TI RF OUTPUT LEVEL (dB mW)	STEP ATTEN (2.5) SETTING (dB)
-30	30
-40	20
-50	10
-60	0

i. Determine if TI attenuator is within following tolerances using following equation:

TI attenuator change = A + B - C

Where:

A = Recorded TI rf output level change from -6 to -20 dB mW as recorded in step b.

B = Change in step attenuator from 40-dB reference setting (derived from special calibration data on step attenuator).

C = Recorded display difference from step h.

For example, if the recorded TI rf output level change from -6 to -20 dB mW is -13.9 dB mW, the change in step attenuator from the 40-dB reference setting is -10.3 dB, and the recorded display difference is -0.5, the TI attenuator change is calculated as follows:

TI attenuator change = -13.9 + (-10.3) - (-0.5)
TI attenuator change = -23.7 dB

TI NOMINAL RF OUTPUT LEVEL (dB mW)	CHANGE FROM RDNG AT -6-dB mW SETTING	
	NOMINAL (dB)	MIN/MAX LIMITS (dB)
-30	-24	-23 to -25
-40	-34	-33 to -35
-50	-44	-43 to -45
-60	-54	-53 to -55 (record TI calculated change for later use)

j. Set step attenuator (2.5) to 40 dB and insert two rf amplifiers (2.10) in measurement system as shown in figure 3.

k. Adjust spectrum analyzer log reference level attenuators for center screen reference level on display. Ensure that spectrum analyzer fine frequency control is adjusted for maximum trace deflection.

l. Set TI rf output level and step attenuator (2.5) to the following settings and record change in spectrum analyzer display. Record change from reference in + or - values.

TI RF OUTPUT LEVEL (dB mW)	STEP ATTEN SETTING (dB)
-70	30
-80	20
-90	10
-100	0

m. Determine if TI attenuator is within following tolerances, using the same equation that is shown in step i except for the following changes:

A = Recorded TI rf output level change from -6 to -60 dB mW as recorded in step i.

B = Recorded display difference from step l.

TI NOMINAL RF OUTPUT LEVEL (dB mW)	CHANGE FROM RDNG AT -6-dB mW SETTING	
	NOMINAL (dB)	MIN/MAX LIMITS (dB)
-70	-64	-62 to -66
-80	-74	-72 to -76
-90	-84	-82 to -86
-100	-94	-92 to -96

n. Disconnect test equipment from TI.

4.2.6 Modulation Tones Frequency Accuracy

Note

Since all of the audio tones are derived from the same reference crystal, only the frequency accuracy of one tone is measured.

a. Connect frequency counter (2.7) to TI AUX output on rear panel.
b. Set TI output frequency to 108.00 MHz and measure period of 30-Hz reference signal. Frequency counter must indicate between 33331.67 and 33335.00 μs (30.0015 and 29.9985 Hz).
c. Disconnect frequency counter from TI.

4.2.7 Modulation Tones Distortion

4.2.7.1 Audio

a. Connect distortion analyzer (2.6) to TI COMP output on rear panel.
b. Set TI for output frequencies and tones listed below and measure their distortion. Measured distortion must be less than limit specified. All tones are available at the TI COMP output except the 30-Hz reference. The 30-Hz reference is available at the TI AUX output whenever any VOR channel is selected.

To obtain all tones except AUX audio:

1. Select listed rf frequency.
2. Press TI TONE SELECT key required to obtain tone to be measured or to delete unwanted tones.
3. Set listed modulation level.

To obtain AUX audio tones:

1. Select listed rf frequency.
2. Delete unwanted tones using TONE SELECT keys.
3. Press TI FUNCTION/CONTROL VAR FREQ key.
4. Press TI TONE SELECT 1020/AUX key.
5. Set listed AUX audio tone frequency.
6. Press % MOD key.
7. Press 1020/AUX key.
8. Set listed modulation level.

RF FREQ (MHz)	TONE (Hz)	LEVEL (% Mod)	MAX DISTN (%)
75.00	3000	95	<1.0
75.00	3000	30	<1.0
108.10	90	20	<0.25
108.10	90	6	<1.0
108.10	150	20	<0.25
108.10	150	6	<1.0
108.10	1020 (ident)	30 (fixed)	<0.5
108.00	30-Hz ref (measured at TI AUX output)	30 (fixed)	<0.25
108.00	30-Hz var	30	<0.25
108.00	30-Hz var	9	<1.0
108.00	9960	30	<0.5
108.00	9960	9	<1.5
108.00	1020 (ident)	30 (fixed)	<0.5
108.00	14000 (AUX audio)	30	<1.0
108.00	14000 (AUX audio)	9	<2.0
108.00	3000 (AUX audio)	9	<2.0

c. Disconnect distortion analyzer from TI.

4.2.8 VOR Tones

4.2.8.1 Functional Operation

a. Set TI frequency to 108.00 MHz.
b. Press T/F U/L D/R key. RDL/DDM/MOD FROM indicator must turn off and TO indicator must turn on.
c. Press STD key. RDL/DDM/MOD TO indicator must turn off and FROM indicator must turn on.
d. Press STEP ΔRDL ΔDDM key. RDL/DDM/MOD indication must increase 30°.
e. Press +10° STEP key. RDL/DDM/MOD indication must increase 10°.

f. Press -10° STEP key. RDL/DDM/MOD indication must decrease 10°.
g. Press and hold ⊣+ key. RDL/DDM/MOD indication must increase. Release key.
h. Press and hold +⊢ key. RDL/DDM/MOD indication must decrease. Release key.
i. Press RDL/DDM key and enter 123.45 on DATA ENTRY keys. Press DATA ENTRY ENTER key. RDL/DDM/MOD display must indicate 123.45°.
j. Press STD key. RDL/DDM/MOD display must indicate 000.00°.
k. Press DATA ENTRY—f key. Key must light.
l. Sequentially press DATA ENTRY 30°, 120°, 210°, and 330° keys. RDL/DDM/MOD display must correspond with selected degree.
m. Press STD key. RDL/DDM/MOD display must indicate 000.00°.

Note

Performance of paragraph 4.2.8.2, 9960-FM deviation functional verification, ensures that the 9960-Hz signal is being frequency modulated ±480 Hz within ±5%. Due to TI VOR digital circuit design, if TI meets the requirements of this test, the 9960-FM deviation will be within the 480 ±2-Hz tolerance. However, if a computing counter is available, it is recommended that the deviation verification procedure described in paragraph 4.3.4 be performed to provide an accurate measurement of the 9960-FM deviation, instead of the function verification described in paragraph 4.2.8.2.

4.2.8.2 9960-FM Deviation, Functional Verification

Note

The procedure outlined in this step uses a scope to view the end of the fifth cycle of the 9960-Hz frequency modulated signal. The width of the jitter at the end of the fifth cycle is proportional to the amount of 9960-Hz FM deviation. The 9960-Hz signal deviating ±480 Hz varies between the two frequencies of 9480 and 10 440 Hz, with periods of 105.485 and 95.785 μs. The time for five cycles of 10 440 Hz is 5 x 95.785 μs (or 478.925 μs) and the time for five cycles of 9480 Hz is 5 x 105.485 μs (or 527.425 μs). The difference between these two time intervals is 48.5 μs (527.425 - 478.925 μs = 48.5 μs). For a 9960-Hz signal with ±480 Hz ±5% FM, the jitter at the end of the fifth cycle would be 48.5 μs ±5% (or ±2.4 μs).

a. Connect oscilloscope (2.8) channel 1 vertical input to TI COMP output on rear panel, and make the following instrument settings:

1. TI

CONTROL	SETTING
FREQUENCY	108.00 MHz
TONE SELECT	9960 FM only (30 Hz VAR off)

2. Oscilloscope (2.8)

CONTROL	SETTING
Vertical mode	Channel 1
Coupling	Ac
Volts/division	1
Horizontal display	A intensified
Time/division A	0.1 ms
Time/division B	5 μs
A trigger mode	Automatic
A coupling	Ac
A source	Channel 1
A trigger slope	+
B coupling	Ac
B source	Start after delay

b. Center oscilloscope trace vertically and adjust A trigger level for trace triggered at zero crossing of displayed signal.
c. Using delay time positioning control, adjust intensified area of trace to cover end of fifth cycle.
d. Depress horizontal display B delayed; jitter at end of fifth cycle should now be displayed on scope. For TI 9960-Hz signal to be deviating ±480 Hz ±5% or better, width of jitter must be between 46.1 and 50.9 μs.
e. Disconnect scope from TI.

4.2.8.3 Radial Accuracy

Note

The TI radial specification for the composite VOR signal (±0.01° before modulation and ±0.05° after demodulation of the rf signal) is referenced to the accuracy of the VOR bearing standard used to calibrate the signal. This specification means the TI will change

not more than this specified amount between calibration intervals with respect to the standard used. The TI absolute radial accuracy, therefore, is ±0.01° (audio) or ±0.05° (demodulated rf audio) plus the accuracy of the VOR bearing standard used for calibration. The TI was set at the factory during manufacture for 0.00° measured radial error at the TI COMP output and verified to measure less than ±0.05° error at the DEMOD output using a Collins 478A-3 Zifor. This VOR standard is specified to be within ±0.01° at VOR zero and to ±0.02° at all other radials referenced to a standard Collins 478A-3 Zifor which is maintained by Rockwell-Collins Avionics Metrology Department as an absolute VOR standard.

A problem occurs in trying to verify the accuracy of the TI at the end of the TI cycle rate period, due to the accuracy of available VOR bearing standards. The following situations exist:

1. If the same VOR standard (same model and serial number) is used, the TI may be expected to agree with the standard within ±0.01° (audio) and ±0.05° (demodulated rf audio).
2. If a like model VOR standard is used, but a different serial number, the TI can be expected to agree only within the accuracy of the standard times 2, plus 0.01° (audio) or 0.05° (demodulated rf audio).
3. If a different model of VOR standard is used, the TI can be expected to agree only within the sum of the tolerances of the two standards, plus 0.01° (audio) or 0.05° (demodulated rf audio).

This procedure was written assuming the same model of standard would be used to verify the TI that was used for initial calibration (Collins 478A-3 Zifor); therefore, the preceding situation 2 applies. If this is not the case, appropriate tolerances may be substituted in the procedure. After verification of the incoming TI status, the procedure gives instructions to set the TI for 0.00° measured VOR error at the discretion of the user. The TI accuracy after calibration will then be that of the user's VOR bearing standard.

a. Connect VOR bearing standard (2.9) to TI COMP output on rear panel.
b. Set TI to 108.00 MHz with radial setting of FROM 000.00° and with both 30 Hz VAR and 9960 FM on.
c. Obtain a reading of 000.00° on VOR bearing standard by stepping TI bearing in + or - 0.01° increments.
d. TI RDL/DDM/MOD radial indication must be within the accuracy of the VOR bearing standard multiplied by 2, plus ±0.01°.
e. Connect VOR bearing standard to TI DEMOD output on rear panel.
f. Obtain a heading of 000.00° on VOR bearing standard by stepping TI reading in + or - 0.01° increments.
g. TI RDL/DDM/MOD radial indication must be within the accuracy of the VOR bearing standard multiplied by 2, plus ±0.05°.

Note

Perform steps h through s only if VOR bearing 0° adjustment is required. This adjustment is at the discretion of the user.

h. Press TI POWER switch, and release to OFF position.
i. Remove two screws from each side and six screws from bottom of signal generator that secure dust cover, and slide dust cover off of signal generator. Refer to figure 1 in the maintenance section for dust cover screw locations.
j. Press TI POWER switch to the ON position.
k. Connect VOR bearing standard to TI COMP output on rear panel, and set TI rf frequency to 108.00 MHz (VOR mode).
l. Obtain a heading of 000.00° on the VOR bearing standard by adjusting TI VOR zero adjustment potentiometer A2A2R8 (identified as R8 on left side of modulator bracket).
m. Connect VOR bearing standard to TI DEMOD output on rear panel.
n. Obtain a heading of 000.00° on VOR bearing standard by stepping TI bearing in + or - 0.01° increments.
o. TI RDL/DDM/MOD radial indication must indicate 0.00° ±0.05°.
p. Press TI POWER switch and release to OFF position.
q. Disconnect VOR bearing standard from TI.
r. Install signal generator dust cover and secure with two screws on each side and six screws on the bottom.
s. Press TI POWER switch to ON position.

Note

If VOR bearing standard used cannot measure tracking, a phase meter may be used to measure phase difference between TI 30-Hz reference and 30-Hz variable VOR tones. This check is limited; it does not check the composite signal. However, because of the method used to generate these signals, it is felt to be adequate. This alternate check begins at step x.

t. Connect VOR bearing standard (2.9) to TI COMP output on rear panel. If TI was not adjusted for 0° (steps h through s), perform step u; if adjustment was made, perform step v.

u. Set the TI to the radial indications listed below. The reading on the VOR bearing standard must be between the limits specified (VOR bearing standard accuracy x 2, plus ±0.01°).

TI RADIAL INDICATION (°)	VOR BEARING STANDARD INDICATION (°)	
	MIN	MAX
030.00	29.95	30.05
060.00	59.95	60.05
090.00	89.95	90.05
120.00	119.95	120.05
150.00	149.95	150.05
180.00	179.95	180.05
210.00	209.95	210.05
240.00	239.95	240.05
270.00	269.95	270.05
300.00	299.95	300.05
330.00	329.95	330.05

Proceed to paragraph 4.2.9.

v. For the radials listed in step u above, the reading on the VOR bearing standard must not exceed ±0.03°.

w. Proceed to paragraph 4.2.9.

x. Connect phasemeter (2.15) reference input to TI COMP output on rear panel, and test input to TI AUX output.

y. Press TI STD key and delete 9960 FM signal.

z. Note phasemeter indication as a reference correction factor for measuring VOR tracking.

aa. Set TI to radial indications listed below and delete 9960 FM signal after each radial change. Algebraically add phasemeter indications and reference correction factor noted in step z. Corrected phasemeter indications must be within limits specified. Subtract the phasemeter correction factor noted in step z from the phasemeter indications.

TI RADIAL INDICATION (°)	VOR BEARING STANDARD INDICATION (°)	
	MIN	MAX
030.00	29.94	30.06
060.00	59.94	60.06
090.00	89.94	90.06
120.00	119.94	120.06
150.00	149.94	150.06
180.00	179.94	180.06
210.00	209.94	210.06
240.00	239.94	240.06
270.00	269.94	270.06
300.00	299.94	300.06
330.00	329.94	330.06

ab. Disconnect test equipment from TI.

4.2.9 Localizer DDM

4.2.9.1 Functional Operation

a. Set TI FREQUENCY to 108.10 MHz.

b. Repeatedly press STEP ΔRDL ΔDDM key. RDL/DDM/MOD indication must increase from 0.000 in following steps: 0.046, 0.093, 0.155, and 0.200.

c. Press and hold ⊣⊢ key. RDL/DDM/MOD indication must decrease. Release key.

d. Press and hold ⊣⊢ key. RDL/DDM/MOD indication must increase. Release key.

e. Press RDL/DDM key and enter 0.400 on DATA ENTRY keys. Press DATA ENTRY ENTER key. RDL/DDM/MOD display must indicate 0.400 DDM.

f. Press T/F U/L D/R key. RDL/DDM/MOD U/L(150 Hz) indicator must turn off and D/R(90 Hz) indicator must turn on.

g. Press STD key. RDL/DDM/MOD D/R(90 Hz) indicator must turn off and U/L(150 Hz) indicator must turn on.

4.2.10 Glideslope DDM

Note

Since the DDM's are generated digitally and do not depend on the accuracy ratio of precision resistors, only the glideslope DDM's are verified.

4.2.10.1 Functional Operation

a. Set TI FREQUENCY to 335.00 MHz.
b. Repeatedly press STEP ΔRDL ΔDDM key. RDL/DDM/MOD indication must increase from 0.000 DDM in following steps: 0.045, 0.091, 0.175, and 0.400.
c. Press and hold ┼ key. RDL/DDM/MOD indication must decrease. Release key.
d. Press and hold ┼ key. RDL/DDM/MOD indication must increase. Release key.
e. Press RDL/DDM key and enter 0.800 on DATA ENTRY keys. Press DATA ENTRY ENTER key. RDL/DDM/MOD display must indicate 0.800 DDM.
f. Press T/F U/L D/R key. RDL/DDM/MOD U/L(150 Hz) indicator must turn off and D/R(90 Hz) indicator must turn on.
g. Press STD key. RDL/DDM/MOD D/R(90 Hz) indicator must turn off and U/L(150 Hz) indicator must turn on.

4.2.10.2 On-Course Accuracy

a. Connect true rms differential voltmeter (2.3) to TI COMP output on rear panel.
b. Measure and record 90- and 150-Hz tone levels for 0.000 DDM setting. Delete undesired tone on TONE SELECT keys. The calculated voltage ratio must be within 0.99975 and 1.00025 (1.00000 nominal).
c. Connect true rms differential voltmeter (2.3) to TI DEMOD output on rear panel.
d. Measure and record 90- and 150-Hz tone levels for 0.000 DDM. Delete undesired tone on TONE SELECT keys. Divide the measured value of one tone by the other to determine voltage ratio. The calculated voltage ratio must be between 0.99745 and 1.00255 (1.00000 nominal).
e. Disconnect true rms differential voltmeter from TI.

4.2.10.3 Off-Course Tracking Accuracy

a. Connect resistive divider (2.16) input to TI COMP output on rear panel.
b. Connect true rms differential voltmeter (2.3) to resistive divider output.
c. Delete 150-Hz tone.
d. Measure and record 90-Hz tone levels for 0.045-, 0.400-, 0.750-, and 0.790-DDM settings.
e. Add 150-Hz tone and delete 90-Hz tone.
f. Measure and record 150-Hz tone levels for 0.045-, 0.400-, 0.750-, and 0.790-DDM settings.
g. Calculate voltage ratio by dividing 150-Hz tone by 90-Hz tone level for each DDM setting. The calculated voltage ratios must be within limits specified below.

DDM (UP/ DOWN)	NOMINAL	LIMITS MIN	LIMITS MAX
0.045	1.11921	1.11864	1.11977
0.400	3.00000	2.99800	3.00200
0.750	31.0000	30.6362	31.3723
0.790	159.00	132.61	198.38

h. Set DDM to 0.045 and press TI FUNCTION/ CONTROL — T/F U/L D/R key.
i. Measure and record 90- and 150-Hz tone levels for 0.045-, 0.400-, 0.750-, and 0.790-DDM settings. Record level for both 90- and 150-Hz tones at each DDM setting before proceeding to next DDM setting. The 90- and 150-Hz tones are added and deleted through TONE SELECT keys.
j. Calculate voltage ratio by dividing 90-Hz tone level by 150-Hz tone level. Voltage ratio must be within limits specified in step g.
k. Disconnect test equipment from TI.

4.2.11 AM Modulation

Note

Two methods are available for measuring the AM modulation of the TI to the required accuracy. The first method, beginning at paragraph 4.2.11.1, uses a modulation meter (2.17) and distortion analyzer (2.6) to measure both amplitude modulation and rf distortion.

In case the modulation meter is unavailable, an alternate procedure using a spectrum analyzer (2.1) is provided. The alternate procedure, however, cannot verify rf distortion levels. This alternate procedure preliminary operation begins at paragraph 4.2.11.2.

4.2.11.1 AM Modulation and RF Distortion Calibration Verification (Using a Modulation Meter)

a. Connect the equipment as shown in figure 4.
b. Make the following instrument settings:

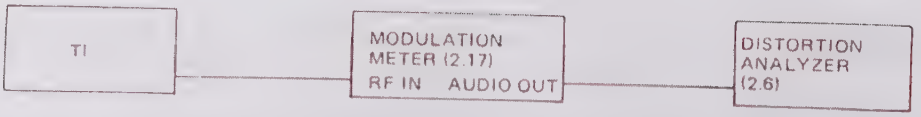

AM Modulation and RF Distortion, Equipment Setup No 1, Using Modulation Meter
Figure 4

1. TI

CONTROL	SETTING
FREQUENCY	113.70 MHz
RF LEVEL	-6 dBmW
TONE SELECT	30 Hz VAR
% MOD	30%

2. Modulation Meter

CONTROL	SETTING
Tuning	Auto
High pass (Hz)	10
Low pass/deemphasis	Out (low pass (kHz))/15
Peak	PK-PK / 2

CONTROL	SETTING
Range	100
Function	% AM
Level control	Fully ccw (in detent)

c. Modulation meter must indicate between 29.3 and 30.7% modulation.

d. Measure distortion of the demodulated rf signal with the distortion analyzer. The measured distortion must be <1.0%.

e. Repeat steps c and d selecting TI rf frequencies, modulating tones, and AM levels listed below. Note the filter settings on the modulation meter. The modulation levels and distortions measured must meet the limits specified.

TI FREQ (MHz)	MODULATING TONE (Hz)	AM MOD (%)	MODULATION METER		MEASURED MODULATION LIMITS (%)		MEASURED DISTORTION (%)
			RANGE	LOW-PASS FILTER (kHz)	MIN	MAX	
113.70	30 Hz VAR	5	10	15	4.75	5.25	<1.5
113.70	9960	30	100	120	29.3	30.7	<1.5
113.70	9960	5	10	120	4.75	5.25	<2.0
113.70	1020 (ident)	30	100	15	29.3	30.7	<1.0
113.70	3000 (AUX audio)	30	100	15	28.5	31.5	<2.0
113.70	14000 (AUX audio)	35	100	120	32.6	37.4	<3.0
110.10	90	20	10	15	19.50	*20.50	<1.0
110.10	90	5	10	15	4.75	5.25	<1.5
110.10	150	20	10	15	19.50	*20.50	<1.0
110.10	150	40	100	15	38.0	42.0	<1.5
110.10	1020 (ident)	30	100	15	29.3	30.7	<1.0
110.10	4000 (AUX audio)	30	100	15	28.5	31.5	<1.5
110.10	4000 (AUX audio)	5	10	15	4.65	5.35	<3.0
332.15	90	40	100	15	39.0	41.0	<1.2
332.15	90	10	10	15	9.50	10.50	<3.0
332.15	150	40	100	15	39.0	41.0	<1.2
332.15	150	80	100	15	76.0	84.0	<3.0
332.15	1000 (AUX audio)	30	100	15	28.5	31.5	<2.0
75.00	400	95	100	15	90.3	99.7	<4.0
75.00	1300	95	100	15	90.3	99.7	<4.0
75.00	3000	95	100	15	90.3	99.7	<4.0
75.00	100 (AUX audio)	97	100	15	90.2	100.0	<4.0
75.00	100 (AUX audio)	15	10	15	13.95	*16.05	<5.0

*Modulation meter range 10%; disregard overrange indication.

f. Connect the equipment as shown in figure 5.
g. Set TI rf frequency to 332.00 MHz and delete the 90-Hz modulating tone.
h. Record the 150-Hz signal level indication on the differential voltmeter.
i. Delete the 150-Hz modulating tone.
j. Connect audio oscillator (2.18) to TI EXT MOD input.
k. Set audio oscillator to produce a 150-Hz signal 2 times the value recorded in step h at the TI DEMOD output as measured on differential voltmeter.
l. Modulation meter must indicate between 75 and 85% AM.
m. Increase audio oscillator level to produce 90% modulation as measured on the modulation meter.
n. Distortion analyzer must indicate <4% distortion.
o. Oscilloscope signal display must not show clipping at positive or negative peaks.
p. Disconnect test equipment from TI. (This completes the periodic calibration verification. Proceed to step 4.3.)

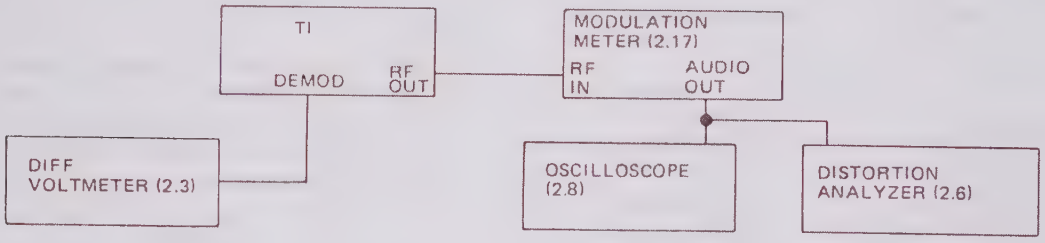

TP5-5478-011

AM Modulation and RF Distortion, Equipment Setup No 2, Using Modulation Meter
Figure 5

4.2.11.2 AM Modulation Calibration Verification Procedure (Using a Spectrum Analyzer)

Note

A spectrum analyzer is used as a linear detector in the zero scan mode to detect the AM modulated marker beacon, VOR, localizer, and glideslope rf signals. The detected ac and dc signals from the spectrum analyzer vertical output are measured with a true rms voltmeter and dc dvm to determine percent of modulation. The spectrum analyzer used must be linear and the vertical output dc offset voltage (V dc) must be known.

Explanation:

Percent modulation calculated from a detected rf signal =

$$\frac{V_{peak}}{V\ dc} \times 100, \text{ or } \frac{1.414\ V_{rms}}{V\ dc} \times 100$$

If V dc = 0.2828, then percent modulation =

$$\frac{1.414\ V_{rms}}{0.282} \times 100, \text{ or } \frac{V_{rms}}{0.2} \times 100$$

For the relationship of percent of modulation $\left(\frac{Vrms}{0.2} \times 100\right)$ to be applicable using the spectrum analyzer, its vertical output dc voltage must be set to -282.8 mV plus its vertical output dc offset voltage.

Performance of the following procedure ensures spectrum analyzer linearity to be adequate and determines its vertical output dc offset voltage for later use in measuring AM modulation.

TP5-3309-C12

Spectrum Analyzer Linearity Check, Equipment Setup
Figure 6

a. Connect equipment as shown in figure 6 and make the following instrument settings:

1. Signal Generator (2.11)

CONTROL	SETTING
Frequency	30.0 MHz
Output level	+7 dB mW
AM	Off
FM	Off

2. Step Attenuator (2.5)

CONTROL	SETTING
Attenuation	20 dB

3. Digital Voltmeter (2.2)

CONTROL	SETTING
Function	Dc volts
Range	2

4. Spectrum Analyzer (2.1)

CONTROL	SETTING
Frequency	30 MHz
Tuning stabilizer	Off
Bandwidth	300 kHz
Scan width	200 kHz/division
Input attenuation	10 dB
Scan time	2 ms/division
Linear sensitivity	2 mV/division
Vertical sensitivity	Linear
Video filter	Off
Scan mode	Internal
Scan trigger	Automatic
Display controls	As required

b. Adjust spectrum analyzer frequency and linear sensitivity controls for center screen display of 30-MHz signal.

c. Set spectrum analyzer tuning stabilizer to on, scan width to zero, and adjust frequency controls for peak amplitude indication (maximum dc voltage indication on dvm). Maintain peaked condition during this procedure.

Note

Record all voltages in steps d, e, and f to the nearest tenth millivolt.

d. Adjust spectrum analyzer sensitivity control for a 200 ±1-mV dc indication on dvm. Record 200 ±1-mV indication as V_1.

e. Set step attenuator (2.5) to 30 dB and record dvm indication as V_2.

f. Set step attenuator (2.5) to 10 dB and record dvm indication as V_3.

g. Calculate $V_{OFF\ 1}$ and $V_{OFF\ 2}$ as follows:

$$V_{OFF\ 1} = \frac{V_1 - R_1V_2}{1 - R_1}$$

$$V_{OFF\ 2} = \frac{V_3 - R_2V_1}{1 - R_2}$$

Where:

$V_{OFF\ 1}$ = Offset voltage no 1

$V_{OFF\ 2}$ = Offset voltage no 2

V_1 = Recorded voltage no 1 (20-dB setting)

V_2 = Recorded voltage no 2 (30-dB setting)

V_3 = Recorded voltage no 3 (10-dB setting)

R_1 = Voltage ratio derived from calibration data on step attenuator from 20- to 30-dB step (voltage ratio = antilog $\frac{dB}{20}$).

R_2 = Voltage ratio derived from calibration data on step attenuator from 10- to 20-dB step (voltage ratio = antilog $\frac{dB}{20}$).

For example:

If V_1 = -200.0 mV

V_2 = -44.9 mV

V_3 = -696.0 mV

R_1 = 3.1623/1 (10.00 dB)

R_2 = 3.1732/1 (10.03 dB)

$$V_{OFF\ 1} = \frac{-200.0 - (3.1623 \times -44.9)}{1 - 3.1623} = 26.8\ mV$$

$$V_{OFF\ 2} = \frac{-696.0 - (3.1732 \times -200.0)}{1 - 3.1732} = 28.2\ mV$$

h. Spectrum analyzer linearity is adequate for amplitude modulation calibration verification procedure and measurements if $V_{OFF\ 1}$ equals $V_{OFF\ 2}$ within ±2 mV.

i. Determine average of $V_{OFF\ 1}$ and $V_{OFF\ 2}$ and record as V_{OFF} for later use. Calculate V_{OFF} using the following equation:

$$V_{OFF} = \frac{V_{OFF\ 1} + V_{OFF\ 2}}{2}$$

For example:

$$V_{OFF} = \frac{26.8 + 28.2}{2} = 27.5\ mV$$

4.2.11.3 AM Modulation Calibration Verification Procedure

a. Connect TI to test equipment as shown in figure 7.

b. Make the following instrument settings:

1. TI

CONTROL	SETTING
FREQUENCY	113.70 MHz
RF LEVEL	23 -dBmW
TONE SELECT	30 Hz VAR (9960 FM off)
% MOD	30%

2. Digital Voltmeter (2.2)

Function	Dc volts
Range	2

3. Spectrum Analyzer (2.1)

CONTROL	SETTING
Frequency	113.7 MHz
Tuning stabilizer	Off
Bandwidth	300 kHz
Scan width	200 kHz/division
Input attenuation	10 dB
Scan time	2 ms/division
Linear sensitivity	2 mV/division
Vertical sensitivity	Linear
Video filter	Off
Scan mode	Internal
Scan trigger	Automatic
Display controls	As required

c. Adjust spectrum analyzer frequency and linear sensitivity controls for center screen display of 113.70-MHz signal.

d. Set spectrum analyzer tuning stabilizer to on, scan width to zero, and adjust frequency controls for

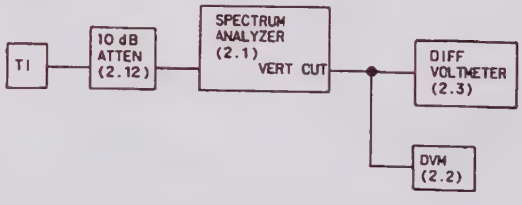

TP5-3310-012

AM Modulation, Equipment Setup No 1, Using Spectrum Analyzer
Figure 7

peak amplitude indication (maximum dc voltage indication on dvm). Maintain peaked condition during remainder of procedure.

e. Adjust spectrum analyzer linear sensitivity control for voltage equal to -282.8 mV + V_{OFF}. Use value for V_{OFF} determined in paragraph 4.2.11.2, step i.

For example:

Spectrum analyzer output voltage (V_{OFF})

= -282.8 mV + V_{OFF}

= -282.8 mV + 27.5 mV

= -255.3 mV

f. Measure ac level with true rms differential voltmeter.

g. TI percent of modulation equals $\frac{\text{V rms}}{0.2}$ x 100.

Measured modulation must be between 29.25 and 30.75%.

h. Repeat steps b through g selecting TI output frequencies, modulating tones, and AM levels listed below. Measured modulation levels must be between limits specified.

TI FREQ (MHz)	MODULATING TONE (Hz)	AM MOD (%)	MEASURED LIMITS (%) MIN	MAX
113.70	9960	30	29.25	30.75
113.70	14000 (AUX audio)	35	32.55	37.45
110.10	90	20	19.50	20.50
110.10	150	20	19.50	20.50
110.10	1020 (ident)	30	29.25	30.75
110.10	4000 (AUX audio)	30	28.50	31.50
332.15	90	40	39.00	41.00
332.15	90	80	76.00	84.00
332.15	150	40	39.00	41.00
332.15	150	80	76.00	84.00
75.00	1300	95	90.25	99.75
75.00	1300	97	91.67	100.00

Note

The modulation level output for the 1020-Hz ident tone is always 30 percent, regardless of the TI modulation display indication.

i. Connect test equipment as shown in figure 8.

j. Set TI rf frequency to 332.00 MHz and delete 90-Hz modulating tone.

k. Record the 150-Hz signal level at the TI DEMOD output indicated on the differential voltmeter.

l. Delete the 150-Hz modulating tone.

m. Connect audio oscillator (2.18) to TI EXT MOD input.

n. Set audio oscillator to produce a 150-Hz signal 2 times the value recorded in step k at the TI DEMOD output as measured on differential voltmeter.

o. Repeat steps b through g. Measured modulation must be between 75 and 85%. Spectrum analyzer must not indicate clipping on the signal peaks.

p. Disconnect test equipment from TI.

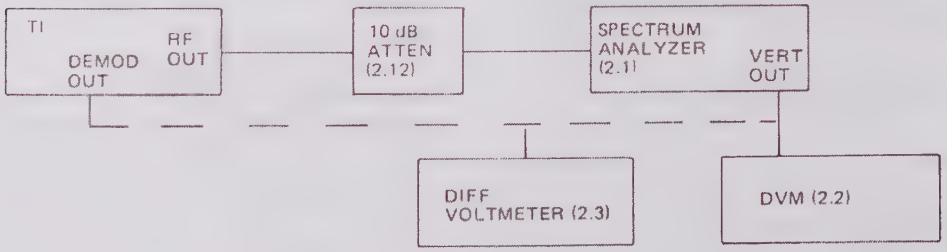

AM Modulation, Equipment Setup No 2, Using Spectrum Analyzer
Figure 8

4.3 Supplemental Calibration Verification Procedures

Note

Performance of these procedures is required only if a problem is suspected, or after repair, at the discretion of the user.

4.3.1 Spurious Signals

a. Set TI rf frequency to 75.00 MHz and output level to -50 dB mW.
b. Select appropriate notch filter (2.23) and connect filter between TI RF OUT connector and spectrum analyzer rf input.
c. Adjust spectrum analyzer to display 75.00-MHz TI signal with notch filter set to any frequency greater than 10 MHz on either side of the 75.00-MHz signal.
d. Set spectrum analyzer display to establish a reference level.
e. Tune notch filter for maximum rejection of 75.00-MHz signal.
f. Set TI rf output level to -10 dB mW.
g. Tune spectrum analyzer across its operating frequency range and observe display. All nonharmonic related signals must be greater than 40 dB below the reference level established in step d. This level equates to greater than 80 dB below the -10-dB mW TI rf output level.
h. Repeat steps a through g for several VOR, localizer, and glideslope frequencies. Refer to table 3 for a list of the available frequencies.
i. Disconnect test equipment from TI.

4.3.2 Broadband Noise (SSB) and Close-In Spurious Signals

Note

The TI broadband noise and close-in spurious signals are measured by using a notch filter to reject the mixed down TI fundamental frequency and pass the TI sideband noise. This technique is used rather than viewing the signal directly on the spectrum analyzer due to the analyzer sideband noise specification not being adequate.

Note

Performance of this test assumes the sideband noise of the local oscillator (2.11) is lower than the TI sideband noise specification. If the sideband noise specification of the signal generator being used as a local oscillator is not known or specified, replace the TI with a signal generator identical to the local oscillator and measure their combined output noise at the stated test frequencies. For the signal generator to be acceptable for use, the measured sideband noise of the two signal generators must be 10 dB less than the TI noise specification. Measurements on the HP 8640B indicate that it is an acceptable signal generator for use as a local oscillator.

a. Make the following instrument settings:

1. TI

CONTROL	SETTING
FREQUENCY	108.000 MHz
RF LEVEL	10 -dBmW
TONE SELECT	No keys lit

2. Signal Generator (2.11)

CONTROL	SETTING
Frequency	118.020 MHz
Output level	+7 dB mW
AM	Off
FM	Off

3. Step Attenuator (2.5)

CONTROL	SETTING
Attenuation	60 dB

4. Spectrum Analyzer (2.5)

CONTROL	SETTING
Frequency	10.0 MHz
Tuning stabilizer	Off
Bandwidth	30 kHz
Scan width	0.5 MHz/division
Input attenuation	0 dB
Scan time	5 ms
Log reference level	-50 dB mW
Vertical sensitivity	10 dB/division
Video filter	Off
Scan mode	Internal
Scan trigger	Automatic
Display controls	As required

b. Connect test equipment as shown in figure 9.
c. Adjust spectrum analyzer frequency control and log reference level attenuators for center screen display of 10.020-MHz if frequency.
d. Make the following spectrum analyzer control settings:

CONTROL	SETTING
Tuning stabilizer	On
Bandwidth	1 kHz/division
Scan width	20 kHz/division
Scan time	10 s/division
Video filter	10 Hz
Scan mode	Manual
Display controls	As required

e. Adjust spectrum analyzer manual scan, frequency tune, and reference log attenuators for full-screen amplitude display one division to right of center screen.
f. Set signal generator (2.11) frequency to 118.00 MHz.
g. Set step attenuator (2.5) to 0 dB.
h. Set spectrum analyzer scan mode switch to single, and press start sweep pushbutton. Adjust analyzer display controls as required.
i. Note the level down from full-screen reference (step e) of highest spurious signal that is greater than ±15 kHz from center screen display, and add 60 dB. Signal level measured must be down more than 80 dB.
j. Note the level down from full-screen reference (step e) of the highest average noise signal that is greater than the following frequencies from center screen display and add 88.3 dB. Noise level measured must be within limits specified.

FREQ FROM CENTER SCREEN (kHz)	MEASURED NOISE LEVEL (dB)
15	>111
30	>117
40	>122

Note

An explanation of the added 88.3-dB correction factor is as follows:

+60 dB — step attenuator value used to establish reference level in step e.

+30 dB — conversion from 1-kHz measurement bandwidth to 1-Hz specification bandwidth (10 log 1000/1).

-1.7 dB — Hewlett-Packard spectrum analyzer correction factor for noise measurements (see Hewlett-Packard Application Note 150-4).

88.3 dB — Total correction.

k. Set spectrum analyzer scan width to 50 kHz/division, and repeat steps h through j.

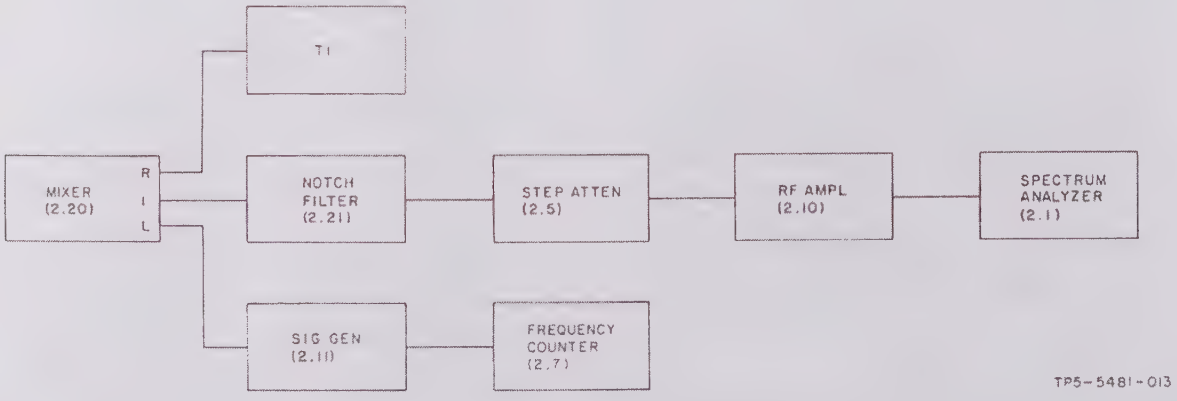

Broadband Noise (SSB) and Close-in Spurious Signals, Equipment Setup
Figure 9

l. Repeat steps a through k, setting signal generator (2.11) for appropriate offset frequencies for TI marker beacon frequency of 75.000 MHz. Noise level measured in step k greater than ±40 kHz from carrier must be down greater than 115 dB.

m. Repeat steps a through k, omitting step j, and setting signal generator (2.11) for appropriate offset frequencies for TI glideslope frequency of 335.000 MHz. Note the level down from full-screen reference of the highest average noise signal that is greater than the following frequencies from center screen display, and add 88.3 dB. Noise level measured must be within limits specified below.

FREQ FROM CENTER SCREEN (kHz)	MEASURED NOISE LEVEL (dB)
50	>112
80	>119
120	>122

n. Disconnect test equipment from TI.

4.3.3 ILS Phase (90/150-Hz Composite Signal

Note

0° phase difference between the 90- and 150-Hz waveforms is defined as the point where both waveforms pass through zero in the same direction at the same time. The TI tolerance is the amount of deviation from the in-phase condition just described, specified in terms of 150-Hz degrees. The TI phase difference between the two tones is normally fixed at 0°, but can be selected to be 60°.

Note

The phase difference between the 90- and 150-Hz signals is verified to be within tolerance at 0 and 60° by measuring amplitude levels at selected points of the composite signal with an oscilloscope. The peak amplitude level of the composite signal at any point in time may be determined from the following formula:

$$A = A_1 SIN(2\pi\ 150 + \phi) + A_2 SIN 2\pi 90t$$

Where:

A_1 = peak amplitude of 150-Hz signal

A_2 = peak amplitude of 90-Hz signal

ϕ = phase difference between the two signals as defined in first note

t = time

An analysis of this equation for various periods of time and signal phase differences shows the following composite waveform amplitude characteristics:

1. The voltage difference between the peaks of the waveforms as shown in figures 11 and 12 to be 0 V if the amplitudes of the two signals are 1-V rms, and if they have 0° phase shift as defined in the first note; 30 mV if the amplitudes of the two signals are 1-V rms, and if the 150-Hz tone leads or lags the 90-Hz tone by 1° rather than 0° as defined in the first note.
2. The voltage peak of the waveform as shown in figure 13 to be between 370 and 418 mV if the amplitudes of the two signals are 1 V rms, and if the 150-Hz tone phase is between 58 and 62° rather than 60° as defined in the first note.

a. Set TI output frequency to 108.3 MHz and delete 90-Hz modulation tone.

b. Connect true rms differential voltmeter (2.3) to TI COMP output on rear panel and measure amplitude of 150-Hz tone. Record amplitude.

c. Add 90-Hz modulation tone and delete 150-Hz modulation tone.

d. Measure amplitude of 90-Hz tone and record amplitude.

e. Compare recorded amplitude of 90-Hz modulation tone with recorded amplitude of 150-Hz modulation tone. Amplitude must be equal within 0.5 mV. Record amplitude of 90-Hz tone (record voltage as a fraction of a volt to the nearest 0.001 V). The recorded voltage will be used later in the procedure as a correction factor.

f. Connect oscilloscope (2.8) to TI COMP output on rear panel.

g. Make the following equipment settings:

1. TI

CONTROL	SETTING
FREQUENCY	108.3 MHz
TONE SELECT	90 Hz, 150 Hz

2. Oscilloscope (2.8)

CONTROL	SETTING
Coupling	Dc
Remainder of controls	As required

h. Obtain oscilloscope trace and note level difference between amplitude of the two waveform peaks as shown in figures 10 and 11.

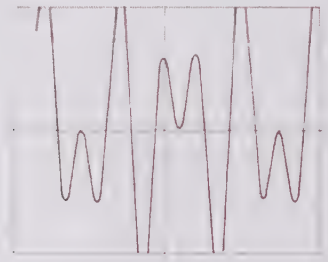

TP5-3312-013

ILS Phase (90/150-Hz Composite Signal), Waveform No 1
Figure 10

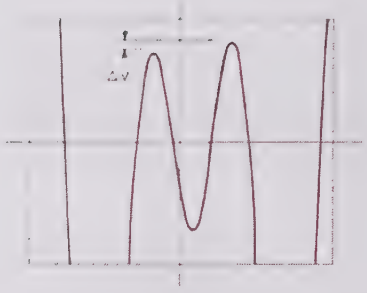

TP5-3311-012

ILS Phase (90/150-Hz Composite Signal), Waveform No 1, Expanded View
Figure 11

i. Multiply 30 mV by correction factor (amplitude of 90-Hz tone) determined in step e. Level difference between the two waveform peaks noted in step h must be less than this calculated value.

j. Press TI DATA ENTRY f key. Key must light. Press TI DATA ENTRY $\frac{0}{60°}$ key.

k. Measure amplitude of waveform peak as shown in figures 12 and 13. Record this value.

l. Disconnect oscilloscope input from TI and connect to oscilloscope calibrator output. Do not change oscilloscope vertical volts/division setting. Note any deflection factor error and correct waveform measurement recorded in step k, if necessary. Record corrected waveform measurement.

m. Connect dvm (2.2) to TI COMP output on rear panel, and measure TI COMP output dc offset voltage. Algebraically subtract this voltage from corrected waveform voltage recorded in step l. Record calculated voltage.

n. Multiply 370 and 418 by the correction factor determined in step e. The product of these calculations determines the waveform voltage limits. The calculated voltage recorded in step m must be between these limits.

o. Disconnect dvm from TI.

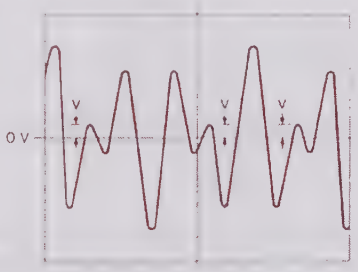

TP5-3306-011

ILS Phase (90/150-Hz Composite Signal), Waveform No 2
Figure 12

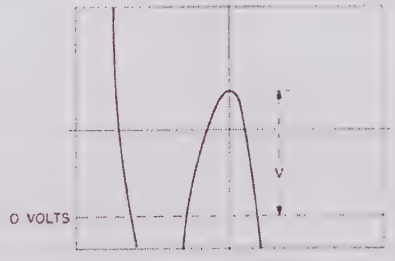

TP5-3307-013

ILS Phase (90/150-Hz Composite Signal), Waveform No 2, Expanded View
Figure 13

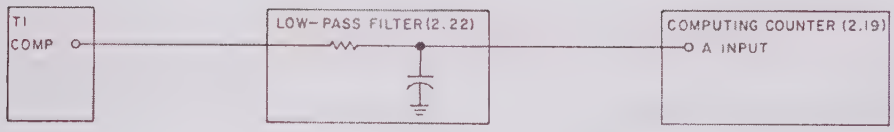

TP5-5482-013

9960-FM Divintion Verification, Equipment Setup
Figure 14

4.3.4 9960-FM Deviation Verification

a. Connect test equipment as shown in figure 14.
b. Make the following instrument settings:

1. TI

CONTROL	SETTING
FREQUENCY	108.00 MHz
TONE SELECT	9960 FM (30 Hz VAR off)

2. HP 5360A Computing Counter (2.17)

CONTROL	SETTING
CYCLE RATE	MAX
DIGITS DISPLAYED	5
EXT	Depressed
PUSHBUTTON MEASUREMENT TIME	3 X 10 μs

3. HP 5365A Input Module

CONTROL	SETTING
FUNCTION	FREQUENCY
INPUT	A
LEVEL	PRESET
SENSITIVITY	X1
COUPLING	AC

4. HP 5375A Keyboard

CONTROL	SETTING
REPEAT LOOP	1K
PAUSE SWITCHES	OFF
MAIN-NORMAL-SUB	NORMAL

c. Depress HP 5375A MANUAL pushbutton.
d. Clear registers a, b, c, z, and y by pressing each of five REGISTER EXCHANGE keys followed by CLEAR x.
e. Enter following program on HP 5375A keyboard:

1. LEARN	10. IF x < b
2. MODULE A	11. b⇄x
3. a⇄x	12. REPEAT
4. a → x → y	13. a → x → y
5. b⇄x	14. b → x → y
6. xFER PROG	15. -(SUBTRACT)
7. MODULE A	16. DISPLAY x
8. IF x > a	17. RUN
9. a⇄x	18. START

f. Counter must indicate peak-to-peak 9960-FM deviation to be between 956 and 964 Hz.
g. Disconnect computing counter from TI.

5. CALIBRATION VERIFICATION CHECKLIST/DATA FORM

Table 4 contains the recommended calibration verification checklist/data form. It is suggested that copies of the form be made so that a calibration verification history can be compiled for each 479S-6A VOR/ILS Signal Generator. The forms in table 4 are to be used as masters for making additional forms and are not to be used for recording calibration verification information.

The form contains the preliminary operation or calibration verification step with the function tested, nominal result, and tolerances for each step requiring a checklist/data form entry.

Table 4. Recommended Calibration/Verification Checklist Data Form.

Collins 479S-6A VOR/ILS Signal Generator — Tested by _____

Serial No _____ — Date _____

PARA	FUNCTION TESTED	LIMITS			MEASURED VALUE
		NOMINAL	MINIMUM	MAXIMUM	
3	PRELIMINARY OPERATIONS				
3.2	Turn-On Operation				_____(✓)
3.3	Self-Test Operation				_____(✓)
4	CALIBRATION VERIFICATION PROCESS				
4.2	Periodic Calibration Verification Procedures				
4.2.1	Frequency Range				
a.	Marker beacon				_____(✓)
b.	VOR				_____(✓)
c.	Localizer				_____(✓)
d.	Glideslope				_____(✓)
e.	Localizer/glideslope paired frequencies				_____(✓)
f.	Communication				_____(✓)
4.2.2	Frequency Accuracy				
	110.000 MHz	110.000000 MHz	109.999780 MHz	110.000220 MHz	_____(✓)
4.2.3	Frequency Vernier				
d.	108.000 MHz	108.000000 MHz	107.999500 MHz	108.000500 MHz	_____(✓)
e.	Slow decrease	Decrease			_____✓
f.	Fast decrease Minimum range	Decrease ≤107.95 MHz			_____(✓) _____MHz
g.	Slow increase	Increase			_____(✓)
h.	Fast increase Maximum range	Increase ≥108.05 MHz			_____(✓) _____MHz
k.	335.000 MHz	35000.0 kHz	35000.0 kHz	35001.0 kHz	_____kHz
m.	334.850 MHz	34850.0 kHz	34850.0 kHz	34850.2 kHz	_____kHz
n.	334.850 MHz	334.850000 MHz	334.849800 MHz	334.850200 MHz	_____MHz

Table 4. Recommended Calibration/Verification Checklist Data Form (Cont).

PARA	FUNCTION TESTED	LIMITS			MEASURED VALUE
		NOMINAL	MINIMUM	MAXIMUM	
4.2.4	Harmonics/Spurious Signals				
b.	Marker beacon frequency				
	Harmonics	>30 dBc			_____dBc
	No nonharmonic spurious signals present. (If present, refer to para 4.3.1 for additional verification procedures.)				_____(✓)
c.	VOR frequencies				
	Harmonics	>30 dBc			_____dBc
	No nonharmonic spurious signals present. (If present, refer to para 4.3.1.)				_____(✓)
	Localizer frequencies				
	Harmonics	>30 dBc			_____dBc
	No nonharmonic spurious signals present. (If present, refer to para 4.3.1.)				_____(✓)
	Glideslope frequencies				
	Harmonics	>25 dBc			_____dBc
	No nonharmonic spurious signals present. (If present, refer to para 4.3.1.)				_____(✓)
4.2.5	RF Output Level				
4.2.5.1	Functional Operation				
b.	RF LEVEL μV indication	700 μV			_____μV
	RF LEVEL -dB mW indication	50 -dB mW			___-dB mW
c.	Slow decrease	1-dB steps			_____(✓)
d.	Slow increase	1-dB steps			_____(✓)
e.	Fast decrease	10-dB steps			_____(✓)
f.	Fast increase	10-dB steps			_____(✓)
g.	Rf off indications correct				_____(✓)
h.	Rf on indications correct				_____(✓)

Table 4. Recommended Calibration/Verification Checklist Data Form (Cont).

PARA	FUNCTION TESTED	LIMITS			MEASURED VALUE
		NOMINAL	MINIMUM	MAXIMUM	
4.2.5.2	Frequency Response				
b.	74.60 MHz	-6 dB mW	-5.5 dB mW	-6.5 dB mW	____dB mW
	75.00 MHz	-6 dB mW	-5.5 dB mW	-6.5 dB mW	____dB mW
	75.40 MHz	-6 dB mW	-5.5 dB mW	-6.5 dB mW	____dB mW
	108.00 MHz	-6 dB mW	-5.5 dB mW	-6.5 dB mW	____dB mW
	110.00 MHz	-6 dB mW	-5.5 dB mW	-6.5 dB mW	____dB mW
	111.95 MHz	-6 dB mW	-5.5 dB mW	-6.5 dB mW	____dB mW
	114.00 MHz	-6 dB mW	-5.5 dB mW	-6.5 dB mW	____dB mW
	116.00 MHz	-6 dB mW	-5.5 dB mW	-6.5 dB mW	____dB mW
	117.95 MHz	-6 dB mW	-5.5 dB mW	-6.5 dB mW	____dB mW
	329.15 MHz	-6 dB mW	-5.5 dB mW	-6.5 dB mW	____dB mW
	331.10 MHz	-6 dB mW	-5.5 dB mW	-6.5 dB mW	____dB mW
	333.50 MHz	-6 dB mW	-5.5 dB mW	-6.5 dB mW	____dB mW
	335.00 MHz	-6 dB mW	-5.5 dB mW	-6.5 dB mW	____dB mW
4.2.5.3	Output Attenuator Accuracy (108.00 MHz)				
b.	Change from reading at -6-dB mW setting				
	-7 dB mW	-1 dB	0 dB	-2 dB	_____ dB
	-8 dB mW	-2 dB	-1 dB	-3 dB	_____ dB
	-10 dB mW	-4 dB	-3 dB	-5 dB	_____ dB
	-14 dB mW	-8 dB	-7 dB	-9 dB	_____ dB
	-20 dB mW	-14 dB	-13 dB	-15 dB	_____ dB
h.	Display difference. Record change from reference in + or - value.				
	-30 dB mW				_____ dB
	-40 dB mW				_____ dB
	-50 dB mW				_____ dB
	-60 dB mW				_____ dB
i.	TI attenuator change from -6 dB mW for -30- to -60-dB mW rf output (TI attenuator change = A + B - C).				
	-30 dB mW	-24 dB	-23 dB	-25 dB	_____ dB
	-40 dB mW	-34 dB	-33 dB	-35 dB	_____ dB
	-50 dB mW	-44 dB	-43 dB	-45 dB	_____ dB
	-60 dB mW	-54 dB	-53 dB	-55 dB	_____ dB
l.	Display difference. Record change from reference in + or - value.				
	-70 dB mW				_____ dB
	-80 dB mW				_____ dB
	-90 dB mW				_____ dB
(Cont)	-100 dB mW				_____ dB

Table 4. Recommended Calibration/Verification Checklist Data Form (Cont).

PARA	FUNCTION TESTED	LIMITS			MEASURED VALUE
		NOMINAL	MINIMUM	MAXIMUM	
4.2.5.3 (Cont)					
m.	TI attenuator change from -6 dB mW for -70- to -100-dB mW rf outputs (TI attenuator change = A + B - C).				
	-70 dB mW	-64 dB	-62 dB	-66 dB	_____ dB
	-80 dB mW	-74 dB	-72 dB	-76 dB	_____ dB
	-90 dB mW	-84 dB	-82 dB	-86 dB	_____ dB
	-100 dB mW	-94 dB	-92 dB	-96 dB	_____ dB
4.2.6	Modulation Tones Frequency Accuracy				
b.	30-Hz reference signal	33333.33 µs (30.0000 Hz)	33331.67 µs (30.0015 Hz)	33335.00 µs (29.9985 Hz)	_____ µs (_____ Hz)
4.2.7	Modulation Tones Distortion				
4.2.7.1	Audio				
b.	Tone distortion				
	75.00 MHz				
	3000 Hz 95% mod	<1.0%			_____ %
	3000 Hz 30% mod	<1.0%			_____ %
	108.10 MHz				
	90 Hz 20% mod	<0.25%			_____ %
	90 Hz 6% mod	<1.0%			_____ %
	150 Hz 20% mod	<0.25%			_____ %
	150 Hz 6% mod	<1.0%			_____ %
	1020 Hz ident	<0.5%			_____ %
	108.00 MHz				
	30 Hz reference	<0.25%			_____ %
	30 Hz variable 30% mod	<0.25%			_____ %
	30 Hz variable 9% mod	<1.0%			_____ %
	9960 Hz 30% mod	<0.5%			_____ %
	9960 Hz 9% mod	<1.5%			_____ %
	1020 Hz ident	<0.5%			_____ %
	14000 Hz AUX audio 30% mod	<1.0%			_____ %
	14000 Hz AUX audio 9% mod	<2.0%			_____ %
	3000 Hz AUX audio 9% mod	<2.0%			_____ %
4.2.8	VOR Tones				
4.2.8.1	Functional Operation				
b.	T/F				
(Cont)	FROM indicator	Off			_____ (✓)
	TO indicator	On			_____ (✓)

Table 4. Recommended Calibration/Verification Checklist Data Form (Cont).

PARA		FUNCTION TESTED	LIMITS			MEASURED VALUE
			NOMINAL	MINIMUM	MAXIMUM	
4.2.8.1 (Cont)						
	c.	STD				
		FROM indicator TO indicator	On Off			_____ (✓) _____ (✓)
	d.	STEP ΔRDL ΔDDM				
		Radial increase	30° step			_____ (✓)
	e.	+10° STEP				
		Radial increase	10° step			_____ (✓)
	f.	-10° STEP				
		Radial decrease	10° step			_____ (✓)
	g.	↑ ← key				
		Radial increase	Increase			_____ (✓)
	h.	→ key				
		Radial decrease	Decrease			_____ (✓)
	i.	RDL/DDM				
		RDL/DDM/MOD display	123.45°			_____ (✓)
	j.	STD				
		RDL/DDM/MOD display	000.00°			_____ (✓)
	l.	DATA ENTRY				
		30° 120° 210° 330°	30.00° 120.00° 210.00° 330.00°			_____ (✓) _____ (✓) _____ (✓) _____ (✓)
	m.	STD				
		RDL/DDM/MOD display	000.00°			_____ (✓)
4.2.8.2		9960-FM Deviation, Functional Verification				
	d.	Deviation	48.5 μs	46.1 μs	50.9 μs	_____ μs

Table 4. Recommended Calibration/Verification Checklist Data Form (Cont).

PARA		FUNCTION TESTED	LIMITS			MEASURED VALUE
			NOMINAL	MINIMUM	MAXIMUM	
4.2.8.3		Radial Accuracy				
	d.	Audio (TI COMP output)	000.00°	±2 (VOR bearing standard accuracy) ±0.01°		_____ °
	g.	Demodulated (TI DEMOD output)	000.00°	±2 (VOR bearing standard accuracy) ±0.05°		_____ °
		Note Record data for steps l and o only if VOR bearing 0° adjustment is made. This adjustment is at the discretion of the user.				
	l.	VOR 000.00° adjusted				_____ (✓)
	o.	Demodulated after adjustment (TI DEMOD output)	000.00°	±2 (VOR bearing standard accuracy) ±0.05°		_____ °
		Note Record data for step u or v only if VOR bearing standard being used can measure tracking accuracy.				
	u.	VOR bearing tracking				
		30°	30.00°	29.95°	30.05°	_____ °
		60°	60.00°	59.95°	60.05°	_____ °
		90°	90.00°	89.95°	90.05°	_____ °
		120°	120.00°	119.95°	120.05°	_____ °
		150°	150.00°	149.95°	150.05°	_____ °
		180°	180.00°	179.95°	180.05°	_____ °
		210°	210.00°	209.95°	210.05°	_____ °
		240°	240.00°	239.95°	240.05°	_____ °
		270°	270.00°	269.95°	270.05°	_____ °
		300°	300.00°	299.95°	300.05°	_____ °
		330°	330.00°	329.95°	330.05°	_____ °
		Note Record data for step v only if VOR bearing 0° adjustment is made. This adjustment is at the discretion of the user.				

Table 4. Recommended Calibration/Verification Checklist Data Form (Cont).

PARA	FUNCTION TESTED	LIMITS			MEASURED VALUE
		NOMINAL	MINIMUM	MAXIMUM	
4.2.8.3 (Cont)					
v.	VOR bearing tracking				
	30°	30.00°	29.97°	30.03°	_____ °
	60°	60.00°	59.97°	60.03°	_____ °
	90°	90.00°	89.97°	90.03°	_____ °
	120°	120.00°	119.97°	120.03°	_____ °
	150°	150.00°	149.97°	150.03°	_____ °
	180°	180.00°	179.97°	180.03°	_____ °
	210°	210.00°	209.97°	210.03°	_____ °
	240°	240.00°	239.97°	240.03°	_____ °
	270°	270.00°	269.97°	270.03°	_____ °
	300°	300.00°	299.97°	300.03°	_____ °
	330°	330.00°	329.97°	330.03°	_____ °
z.	VOR bearing 0° tracking reference	000.00°			_____ °
aa.	VOR bearing tracking				
	30°	30.00°	29.94°	30.06°	_____ °
	60°	60.00°	59.94°	60.06°	_____ °
	90°	90.00°	89.94°	90.06°	_____ °
	120°	120.00°	119.94°	120.06°	_____ °
	150°	150.00°	149.94°	150.06°	_____ °
	180°	180.00°	179.94°	180.06°	_____ °
	210°	210.00°	209.94°	210.06°	_____ °
	240°	240.00°	239.94°	240.06°	_____ °
	270°	270.00°	269.94°	270.06°	_____ °
	300°	300.00°	299.94°	300.06°	_____ °
	330°	330.00°	329.94°	330.06°	_____ °
4.2.9	Localizer DDM				
4.2.9.1	Functional Operation				
b.	STEP ΔRDL ΔDDM (DDM increases)				
	0.000 to 0.046				_____ (✓)
	0.046 to 0.093				_____ (✓)
	0.093 to 0.155				_____ (✓)
	0.155 to 0.200				_____ (✓)
c.	→ (DDM decreases)	Decreases			_____ (✓)
d.	← (DDM increases)	Increases			_____ (✓)
e.	RDL/DDM (.400)	0.400			_____ (✓)
f.	Down/right				
	D/R(90 Hz) indicator	On			_____ (✓)
(Cont)	U/L(150 Hz) indicator	Off			_____ (✓)

Table 4. Recommended Calibration/Verification Checklist Data Form (Cont).

PARA	FUNCTION TESTED	LIMITS			MEASURED VALUE
		NOMINAL	MINIMUM	MAXIMUM	
4.2.9.1 (Cont)					
g.	STD - Up/left				
	D/R(90 Hz) indicator	Off			_____(✓)
	U/L(150 Hz) indicator	On			_____(✓)
4.2.10	Glideslope DDM				
4.2.10.1	Functional Operation				
b.	STEP ΔRDL ΔDDM (DDM increases)				
	0.000 to 0.045				_____(✓)
	0.045 to 0.091				_____(✓)
	0.091 to 0.175				_____(✓)
	0.175 to 0.400				_____(✓)
c.	→ (DDM decreases)	Decreases			_____(✓)
d.	← (DDM increases)	Increases			_____(✓)
e.	RDL/DDM (0.800)	0.800			_____(✓)
f.	Down/right				
	D/R(90 Hz) indicator	On			_____(✓)
	U/L(150 Hz) indicator	Off			_____(✓)
g.	STD - Up/left				
	D/R(90 Hz) indicator	Off			_____(✓)
	U/L(150 Hz) indicator	On			_____(✓)
4.2.10.2	On-Course Accuracy				
b.	Audio (TI COMP output)				
	90-Hz tone level				_____V rms
	150-Hz tone level				_____V rms
	Voltage ratio	1.00000	0.99975	1.00025	_____
d.	Demodulated (TI DEMOD output)				
	90-Hz tone level				_____V rms
	150-Hz tone level				_____V rms
	Voltage ratio	1.00000	0.99745	1.00255	_____

Table 4. Recommended Calibration/Verification Checklist Data Form (Cont).

PARA	FUNCTION TESTED	LIMITS			MEASURED VALUE
		NOMINAL	MINIMUM	MAXIMUM	
4.2.10.3	Off-Course Tracking Accuracy				
d.	90-Hz tone level (up)				
	0.045				_____V rms
	0.400				_____V rms
	0.750				_____V rms
	0.790				_____V rms
f.	150-Hz tone level (up)				
	0.045				_____V rms
	0.400				_____V rms
	0.750				_____V rms
	0.790				_____V rms
g.	Voltage ratio (up – 150 Hz : 90 Hz)				
	0.045	1.11921	1.11864	1.11977	_____
	0.400	3.00000	2.99800	3.00200	_____
	0.750	31.0000	30.6362	31.3723	_____
	0.790	159.00	132.61	198.38	_____
i.	90-Hz tone level (down)				
	0.045				_____V rms
	0.400				_____V rms
	0.750				_____V rms
	0.790				_____V rms
	150-Hz tone level (down)				
	0.045				_____V rms
	0.400				_____V rms
	0.750				_____V rms
	0.790				_____V rms
j.	Voltage ratio (down = 90 Hz + 150 Hz)				
	0.045	1.11921	1.11864	1.11977	_____
	0.400	3.00000	2.99800	3.00200	_____
	0.750	31.0000	30.6362	31.3723	_____
	0.790	159.00	132.61	198.38	_____
4.2.11	AM Modulation *Note* Record data for 4.2.11.1 only if using modulation meter.				
4.2.11.1	AM Modulation and RF Distortion Calibration Verification Using Modulation Meter				
(Cont) c.	30-Hz variable modulation	30.0%	29.3%	30.7%	_____%

Table 4. Recommended Calibration/Verification Checklist Data Form (Cont).

PARA	FUNCTION TESTED	LIMITS			MEASURED VALUE
		NOMINAL	MINIMUM	MAXIMUM	
4.2.11.1 (Cont) d.	30-Hz variable distortion	<1.0%			_____%
e.	113.70 MHz				
	30-Hz VAR				
	Modulation	5.0%	4.75%	5.25%	_____%
	Distortion	<1.5%			_____%
	9960-Hz				
	Modulation	30.0%	29.3%	30.7%	_____%
	Distortion	<1.5%			_____%
	9960-Hz				
	Modulation	5.0%	4.75%	5.25%	_____%
	Distortion	<2.0%			_____%
	1020-Hz				
	Modulation	30.0%	29.3%	30.7%	_____%
	Distortion	<1.0%			_____%
	3000-Hz (AUX audio)				
	Modulation	30.0%	28.5%	31.5%	_____%
	Distortion	< 2.0%			_____%
	14000-Hz (AUX audio)				
	Modulation	35.0%	32.6%	37.4%	_____%
	Distortion	<3.0%			_____%
	110.10 MHz				
	90-Hz				
	Modulation	20.0%	19.50%	20.50%	_____%
	Distortion	<1.0%			_____%
	90-Hz				
	Modulation	5.0%	4.75%	5.25%	_____%
	Distortion	<1.5%			_____%
	150-Hz				
	Modulation	20.0%	19.50%	20.50%	_____%
	Distortion	<1.0%			_____%
	150-Hz				
	Modulation	40.0%	38.0%	42.0%	_____%
	Distortion	<1.5%			_____%
	1020-Hz				
	Modulation	30.0%	29.3%	30.7%	_____%
	Distortion	<1.0%			_____%
	4000-Hz (AUX audio)				
	Modulation	30.0%	28.5%	31.5%	_____%
	Distortion	<1.5%			_____%
	4000-Hz (AUX audio)				
(Cont)	Modulation	5.0%	4.65%	5.35%	_____%
	Distortion	<3.0%			_____%

Table 4. Recommended Calibration/Verification Checklist Data Form (Cont).

PARA	FUNCTION TESTED	LIMITS			MEASURED VALUE
		NOMINAL	MINIMUM	MAXIMUM	
4.2.11.1 (Cont)	332.15 MHz				
	90-Hz				
	Modulation	40.0%	39.0%	41.0%	_____%
	Distortion	< 1.2%			_____%
	90-Hz				
	Modulation	10.0%	9.50%	10.50%	_____%
	Distortion	<3.0%			_____%
	150-Hz				
	Modulation	40.0%	39.0%	41.0%	_____%
	Distortion	<1.2%			_____%
	150-Hz				
	Modulation	80.0%	76.0%	84.0%	_____%
	Distortion	<3.0%			_____%
	1000-Hz (AUX audio)				
	Modulation	30.0%	28.5%	31.5%	_____%
	Distortion	<2.0%			_____%
	75.00 MHz				
	400-Hz				
	Modulation	95.0%	90.3%	99.7%	_____%
	Distortion	<4.0%			_____%
	1300-Hz				
	Modulation	95.0%	90.3%	99.7%	_____%
	Distortion	<4.0%			_____%
	3000-Hz				
	Modulation	95.0%	90.3%	99.7%	_____%
	Distortion	<4.0%			_____%
	100-Hz (AUX audio)				
	Modulation	97.0%	90.2%	100.0%	_____%
	Distortion	<4.0%			_____%
	100-Hz (AUX audio)				
	Modulation	15.0%	13.05%	16.05%	_____%
	Distortion	<5.0%			_____%
l, n.	EXT MOD				
	Modulation	80.0%	75.0%	85.0%	_____%
	Distortion	<4.0%			_____%
o.	EXT MOD				
	No signal clipping				_____(✓)
	Note				
	Record data for paragraph 4.2.11.2 and 4.2.11.3 only if using spectrum analyzer.				

Table 4. Recommended Calibration/Verification Checklist Data Form (Cont).

PARA	FUNCTION TESTED	LIMITS			MEASURED VALUE
		NOMINAL	MINIMUM	MAXIMUM	
4.2.11.2	AM Modulation Verification Procedure Using a Spectrum Analyzer				
d.	V_1 (Record voltage to nearest tenth millivolt.)	200 mV	199 mV	201 mV	_____mV
e.	V_2 (Record voltage to nearest tenth millivolt.)				_____mV
f.	V_3 (Record voltage to nearest tenth millivolt.)				_____mV
g.	$V_{OFF\ 1}$ and $V_{OFF\ 2}$ calculation				
	R_1 (voltage ratio)				_____
	R_2 (voltage ratio)				_____
	$V_{OFF\ 1} = \frac{V_1 - R_1 V_2}{1 - R_1}$				_____mV
	$V_{OFF\ 2} = \frac{V_3 - R_2 V_1}{1 - R_2}$				_____mV
h.	Difference between $V_{OFF\ 1}$ and $V_{OFF\ 2}$	0 mV	-2 mV	+2 mV	_____mV
i.	Calculate V_{OFF}				
	$V_{OFF} = \frac{V_{OFF_1} + V_{OFF_2}}{2}$				
4.2.11.3	AM Modulation Calibration Verification				
e.	Calculate V_{REF}				
	$V_{REF} = -282.8\ mV + V_{OFF}$				_____mV
g, h.	Calculate percent of modulation.				
	Percent modulation = $\frac{V_{rms}}{0.2} \times 100$				
	113.70 MHz				
	30 Hz	30.00%	29.25%	30.75%	_____%
	9960 Hz	30.00%	29.25%	30.75%	_____%
(Cont)	14 000 Hz	35.00%	32.55%	37.45%	_____%

Table 4. Recommended Calibration/Verification Checklist Data Form (Cont).

PARA	FUNCTION TESTED	LIMITS			MEASURED VALUE
		NOMINAL	MINIMUM	MAXIMUM	
4.2.11.3 (Cont)					
	110.10 MHz				
	90 Hz	20.00%	19.50%	20.50%	_____%
	150 Hz	20.00%	19.50%	20.50%	_____%
	1020 Hz	30.00%	29.25%	30.75%	_____%
	4000 Hz AUX audio	30.00%	28.50%	31.50%	_____%
	332.15 MHz				
	90 Hz	40.00%	39.00%	41.00%	_____%
	90 Hz	80.00%	76.00%	84.00%	_____%
	150 Hz	40.00%	39.00%	41.00%	_____%
	150 Hz	80.00%	76.00%	84.00%	_____%
	75.00 MHz				
	1300 Hz	95.00%	90.25%	99.75%	_____%
	1300 Hz	97.00%	91.67%	100.00%	_____%
o.	EXT MOD				
	Modulation	80.00%	75.00%	85.00%	_____%
	No signal clipping				_____(✓)
4.3	Supplemental Calibration Verification Procedures				
4.3.1	Spurious Signals				
g.	Marker beacon nonharmonic related spurious signals	>80 dBc			_____(✓)
h.	VOR nonharmonic related spurious signals	>80 dBc			_____(✓)
	Localizer nonharmonic related spurious signals	>80 dBc			_____(✓)
	Glideslope nonharmonic related spurious signals	>80 dBc			_____(✓)
4.3.2	Broadband Noise (SSB) and Close-in Spurious Signals				
i.	Spurious signals > ±15 kHz from carrier (108.00 MHz)	>80 dBc			_____(✓)
j.	Noise > ±15 kHz from carrier (108.00 MHz)	>111 dBc			_____(✓)
	Noise > ±30 kHz from carrier (108.00 MHz)	>117 dBc			_____(✓)
(Cont)	Noise > ±40 kHz from carrier (108.00 MHz)	>122 dBc			_____(✓)

Table 4. Recommended Calibration/Verification Checklist Data Form (Cont).

PARA		FUNCTION TESTED	LIMITS			MEASURED VALUE
			NOMINAL	MINIMUM	MAXIMUM	
4.3.2 (Cont)						
	k.	Spurious signals > ±15 kHz from carrier (108.00 MHz)	>80 dBc			_____(✓)
		Noise > ±15 kHz from carrier (108.00 MHz)	>111 dBc			_____(✓)
		Noise > ±30 kHz from carrier (108.00 MHz)	>117 dBc			_____(✓)
		Noise > ±40 kHz from carrier (108.00 MHz)	>122 dBc			_____(✓)
	l.	Spurious signals > ±15 kHz from carrier (75.00 MHz)	>80 dBc			_____(✓)
		Noise > ±40 kHz from carrier (75.00 MHz)	>115 dBc			_____(✓)
		Spurious signals > ±15 kHz from carrier (75.00 MHz)	>80 dBc			_____(✓)
		Noise > ±40 kHz from carrier (75.00 MHz)	>115 dBc			_____(✓)
	m.	Spurious signals > ±15 kHz from carrier (335.00 MHz)	>80 dBc			_____(✓)
		Noise ±50 kHz from carrier (335.00 MHz)	>112 dBc			_____(✓)
		Noise > ±80 kHz from carrier (335.00 MHz)	>119 dBc			_____(✓)
		Noise > ±120 kHz from carrier (335.00 MHz)	>122 dBc			_____(✓)
4.3.3		ILS Phase (90/150-Hz Composite Signal)				
	b.	150-Hz tone amplitude				_____V
	d.	90-Hz tone amplitude				_____V
	e.	90- and 150-Hz tone amplitude difference	<0,5 mV			_____mV
		Correction factor (90-Hz tone amplitude) (nearest 0.001 V)				
	h.	Waveform peak amplitude difference				_____V
(Cont)	i.	Calculated reference level (30 mV x correction factor)				_____mV

Table 4. Recommended Calibration/Verification Checklist Data Form (Cont).

PARA	FUNCTION TESTED	LIMITS			MEASURED VALUE
		NOMINAL	MINIMUM	MAXIMUM	
4.3.3 (Cont)					
	Value recorded in step h is less than calculated reference level.				_____
k.	Waveform peak				_____V
l.	Deflection factor error				_____V
	Corrected waveform measurement				_____V
m.	Calculated voltage				_____V
n.	Limit calculations				
	370 x correction factor (step e)				_____mV
	418 x correction factor (step e)				_____mV
	Calculated voltage in step m is within above limits.				_____(✓)
4.3.4	9960-FM Deviation Verification				
f.	9960 deviation	960 Hz	956 Hz	964 Hz	_____Hz

Collins 479S-6A VOR/ILS Signal Generator

Rockwell International

parts list

Printed in USA

Collins Government Avionics Division
523-0769256-002118
2nd Edition, 15 October 1980

list of illustrations

Figure		*Page*
1	479S-6A VOR/ILS Signal Generator	7
2	Front Panel Assembly A1	9
3	Keyboard/Driver Board A1A1	12
4	Display Board Assembly A1A2	18
5	Controller/Audio Assembly A2	21
6	CPU Assembly A2A1	23
7	Analog Board A2A2	29
8	TDM Board A2A3	36
9	RF Modulator Assembly A3	44
10	RF Strip-Line Assembly A3A1	46
11	Demodulator/ALC Assembly A3A2	52
12	Counter I/O Board Assembly A3A3	60
13	Synthesizer Assembly A4	64
14	Regulator/Divider/Filter Assembly A4A1	67
15	Regulator/Divider Board A4A1A1	70
16	Output Amplifier Board A4A2	78
17	Power Supply Assembly A5	80
18	Power Supply Terminal Board Assembly A5A1	83
19	Power Supply PC Board Assembly A5A2	86
20	Heat-Sink Assembly A5A3, A5A4	90
21	Remote Tune Assembly A8	92
22	Store/Recall Assembly A9	95
23	IEEE-488/1978 Bus Interface Assembly A10	99
24	Chassis Assembly A6	102
25	Output Amplifier Board A4A2	104
26	IEEE-488/1978 Bus Interface Assembly A10	107

NOTICE: This section replaces first edition dated 1 October 1978.

List of Effective Pages

*The asterisk indicates pages changed, added, or deleted by the current change.

Page No	Issue
*Title	15 Oct 80
*List of Effective Pages	15 Oct 80
*1 thru 125	15 Oct 80
126 Blank	1 Oct 78
*127 thru 159 Added	15 Oct 80
*160 Blank Added	15 Oct 80

Record of Revisions

RETAIN THIS RECORD IN THE FRONT OF MANUAL.
ON RECEIPT OF REVISIONS, INSERT REVISED PAGES IN THE MANUAL, AND ENTER DATE INSERTED AND INITIALS.

REV NO	REVISION DATE	INSERTION DATE/BY	SB NUMBER INCLUDED	REV NO	REVISION DATE	INSERTION DATE/BY	SB NUMBER INCLUDED
1st Ed	1 Oct 78		None				
2nd Ed	15 Oct 80		SB 1, 2, 3, 5, 6, 7, 8, 9, 10				

1. INTRODUCTION

1.1 General

The purpose of this parts list, prepared by Collins Government Avionics Division of Rockwell International, is for identification, requisition, and issuance of parts.

Parts listed meet critical equipment design specification requirements. Use only part numbers specified in this parts list for replacement of parts.

1.2 Group Assembly Parts List

FIG - ITEM Column — Digits preceding the dash refer to figure numbers. Digits following the dash are item numbers assigned in sequence to correspond with item numbers on the illustrations.

PART NO Column — Listed are MIL standard, vendor, or Collins part numbers. Collins part numbering system consists of 10 digits as follows: a 3-digit family number, a 4-digit serial number, and a 3-digit dash number.

INDENT Column — Items are coded 1, 2, 3, etc, to indicate the relationship to the next higher assembly.

DESCRIPTION Column — Lists the noun name, modifier, descriptive information, federal manufacturer's code, reference designation, attaching part (AP), reference to other figures, and effectivities.

Attaching parts are identified by (AP) following the part or parts they attach.

Effectivities are identified by the following methods: MCN (Manufacturer Control Number) 101 and up; CI (Configuration Identifier) 5-digit number; REV (Revision Identifier) dash (-) denotes original, letter A first change, letter B second change, etc. One of the above identifiers is listed on each chassis and/or replaceable assembly. Service Bulletins are identified by SB 1, SB 2, etc.

USABLE ON CODE Column — Part variations within a group of equipment are indicated by a letter code (A, B, C, etc). Absence of a code indicates part applies to all models.

UNITS PER ASSY Column — Quantities specified are per item number. Letters AR denote the selection of parts as required. Letters RF refer to an assembly completely assembled on a preceding figure and illustration.

Caution

This equipment contains electrostatic discharge sensitive devices, indicated in the description column by (ESDS). Special handling methods and materials must be used to prevent equipment damage. Refer to the maintenance section before assembly/disassembly or repair is performed. All illustrations that contain ESDS devices have the following symbol attached.

1.3 Numerical Index

PART NUMBER Column — Part numbers are listed in alphanumeric sequence.

FIG - ITEM Column — Digits preceding the dash refer to figure numbers. Digits following the dash are item numbers.

TTL REQ Column — Listed is the total quantity of parts or assemblies covered in the Group Assembly Parts List.

1.4 Reference Designation Index

REFERENCE DESIGNATION Column — Reference designations are listed in alphanumeric sequence.

FIG - ITEM Column — Digits preceding the dash refer to figure numbers. Digits following the dash are item numbers.

PART NUMBER Column — Part numbers listed are for items that have reference designations assigned.

1.5 How To Use This Parts List

To locate a part number if the assembly in which the part is used is known, turn to the List of Illustrations and find the page number for the assembly in which the part is used. Locate the part and its index number on the illustration and find the index number on the Group Assembly Parts List page to determine its description and part number.

To locate the illustration for a part if the part number is known, refer to the Numerical Index and find the part number. Turn to the Group Assembly Parts List and find the first figure and index number indicated in the Numerical Index for that part. If this figure shows the part in a section or system of the equipment other than the one desired, refer to the other figure numbers listed in the Numerical Index.

To locate the illustration for a part if the reference designation is known, refer to the Reference Designation Index and find the symbol; turn to the Group Assembly Parts List and find the figure and index number indicated in the index.

1.6 Manufacturer's Code, Name, and Address

CODE	MANUFACTURER'S NAME AND ADDRESS
A1643	DATAMETICS 18065 EUCLID ST. FOUNTAIN VALLEY, CA 92708
A1656	XILOG LOS ALTOS, CA 94022
B0041	SAMLL LOT STAMPING CO. 1540 W. ELIZABETH AVE. LINDEN, NJ 07036
00136	MCCOY ELECTRONICS CO WATTS AND CHESTNUT ST MT HOLLY SPRINGS PA 17065
00779	AMP INC P O BOX 3608 HARRISBURG PA 17105
00853	SANGAMO WESTON INC SANGAMO CAPACITOR DIV SANGAMO RD P O BOX 128 PICKENS SC 29671
01101	WABASH INC 810 N CASS ST P O BOX 708 WABASH IN 46992
01121	ALLEN-BRADLEY CO 1201 SOUTH 2ND ST MILWAUKEE WI 53204
01281	TRW INC TRW SEMICONDUCTOR DIV 14520 AVIATION BLVD LAWNDALE CA 90260
01295	TEXAS INSTRUMENTS INC SEMICONDUCTOR GROUP 13500 N CENTRAL EXPRESSWAY P O BOX 225012 M/S 49 DALLAS TX 75222
02111	SPECTROL ELECTRONICS CORP SUB OF CARRIER CORP 17070 E GALE AVE CITY OF INDUSTRY CA 91745
02114	FERROXCUBE CORP MT MARION RD P O BOX 359 SAUGERTIES NY 12477
02154	ROYSON ENGINEERING CO 100 N PENN ST HATBORO PA 19040
02735	RCA CORP SOLID STATE DIVISION ROUTE 202 SOMERVILLE NJ 08876
03508	GENERAL ELECTRIC CO SEMI-CONDUCTOR PRODUCTS DEPT W GENESEE ST AUBURN NY 13021
03877	TRANSITRON PRECISION CONNECTOR DIV INCON INC 168 ALBION ST WAKEFIELD MA 01880
04713	MOTOROLA INC SEMICONDUCTOR PRODUCTS GROUP 5005 E MCDOWELL RD PHOENIX AZ 85008
04714	USM CORP. ROCKWELL DIV. NEWARK, NJ
05277	WESTINGHOUSE ELECTRIC CORP SEMICONDUCTOR DIV ARMBURST RD YOUNGWOOD PA 15697
05820	WAKEFIELD ENGINEERING INC AUDUBON ROAD WAKEFIELD MA 01880
07263	FAIRCHILD CAMERA AND INSTRUMENT CORP SEMICONDUCTOR DIV 464 ELLIS ST MOUNTAIN VIEW CA 94042
07910	TELEDYNE SEMICONDUCTOR 1300 TERRA BELLA AVE. MOUNTAIN VIEW, CA 94043

CODE	MANUFACTURER'S NAME AND ADDRESS
08289	BLINN DELBERT CO INC THE 1678 E MISSION BLVD P O BOX 2007 POMONA CA 91766
09922	BURNDY CORP RICHARDS AVE NORWALK CT 06852
12040	NATIONAL SEMICONDUCTOR CORP COMMERCE DR P O BOX 443 DANBURY CT 06810
12457	MERRIMAC INDUSTRIES INC 41 FAIRFIELD PLACE WEST CALDWELL NJ 07006
12615	U S TERMINALS INC 7504 CAMARGO ROAD CINCINNATI OH 45243
12954	SIEMENS CORP COMPONENTS GROUP 8700 E THOMAS RD P O BOX 1390 SCOTTSDALE AZ 85252
12998	QUALITY NAME PLATE INC MILL ROAD EAST GLASTONBURY CT 06025
13103	THERMALLOY CO INC 2021 W VALLEY VIEW LANE P O BOX 34829 DALLAS TX 75234
13499	ROCKWELL INTERNATIONAL CORP COLLINS GOVERNMENT AVIONICS DIV AVIONICS AND MISSILES GROUP 400 COLLINS ROAD NE CEDAR RAPIDS IA 52406
14099	SEMTECH CORP 652 MITCHELL ROAD NEWBURY PARK CA 91320
14433	ITT SEMICONDUCTOR DIV WEST PALM BEACH FL
14655	CORNELL-DUBILIER ELECTRONICS DIV OF FEDERAL PACIFIC ELECTRIC CO GOVT CONTRACTS DEPT 150 AVE L NEWARK NJ 07101
14936	GENERAL INSTRUMENT CORP SEMICONDUCTOR PRODUCTS GROUP 600 W JOHN ST P O BOX 600 HICKSVILLE NY 11802
15238	ITT SEMICONDUCTORS A DIVISION OF INTERNATIONAL TELEPHONE AND TELEGRAPH CORP 500 BROADWAY P O BOX 168 LAWRENCE MA 01841
15542	MINI-CIRCUITS LABORATORY DIV OF SCIENTIFIC COMPONENTS CORP 2625 E 14TH ST BROOKLYN NY 11235
15653	KAYNAR MFG CO INC KAYLOCK DIV 800 S STATE COLLEGE BLVD P O BOX 3001 FULLERTON CA 92634
15818	TELEDYNE SEMICONDUCTOR 1300 TERRA BELLA AVE MOUNTAIN VIEW CA 94043
16546	GLOBE-UNION INC USCC/CENTRALAB ELECTRICS DIV 4561 COLORADO LOS ANGELES CA 90039
17856	SILICONIX INC 2201 LAURELWOOD RD SANTA CLARA CA 95054
18324	SIGNETICS CORP 811 E ARQUES SUNNYVALE CA 94086
18796	ERIE TECHNOLOGICAL PRODUCTS INC STATE COLLEGE DIV 1900 W COLLEGE AVE STATE COLLEGE PA 16801
19080	ROBISON ELECTRONICS INC 3580 SACRAMENTO DR SAN LUIS OBISPO CA 93401
21242	AMERICAN ELECTRONIC COMPONENTS CORP 7516 CAMARGO ROAD CINCINNATI OH 45243
23042	TEXSCAN CORP 2446 N SHADELAND AVE INDIANAPOLIS IN 46219
23880	STANFORD APPLIED ENGINEERING INC 340 MARTIN AVE SANTA CLARA CA 95050
24355	ANALOG DEVICES INC RT 1 INDUSTRIAL PK P O BOX 280 NORWOOD MA 02062
24602	EMC TECHNOLOGY INC 1971 OLD CUTHBERT RD CHERRY HILL NJ 08034
27014	NATIONAL SEMICONDUCTOR CORP 2900 SEMICONDUCTOR DR SANTA CLARA CA 95051
27264	MOLEX INC CORPORATE HQ 2222 WELLINGTON COURT LISLE IL 60532
27735	F-DYNE ELECTRONICS 449 HOWARD AVE BRIDGEPORT CT 06605

CODE	MANUFACTURER'S NAME AND ADDRESS
[illegible]	[illegible] [illegible] VIEW CA 94040
28480	HEWLETT-PACKARD CO CORPORATE HQ 1501 PAGE MILL RD PALO ALTO CA 94304
29990	AMERICAN TECHNICAL CERAMICS DIVISION OF PHASE INDUSTRIES 1 NORDEN LANE HUNTINGTON STATION NY 11746
31918	ITT SCHADOW INC 8081 WALLACE RD EDEN PRAIRIE MN 55343
32559	BIVAR INC 1617 E EDINGER AVE SANTA ANA CA 92705
34335	ADVANCED MICRO DEVICES 901 THOMPSON PL SUNNYVALE CA 94086
34371	HARRIS SEMICONDUCTOR DIV OF HARRIS CORP P O BOX 883 MELBOURNE FL 32901
34649	INTEL CORP 3065 BOWERS AVE SANTA CLARA CA 95051
34696	CUSTOM PRODUCTS CO 11626 - 11636 TUXFORD ST P O BOX 699 SUN VALLEY CA 91352
49956	RAYTHEON CO 141 SPRING ST LEXINGTON MA 02173
56289	SPRAGUE ELECTRIC CO NORTH ADAMS MA 01247
56878	SPS TECHNOLOGIES INC HIGHLAND AVE JENKINTOWN PA 19046
57771	STIMPSON EDWIN B CO INC 900 SYLVAN AVE BAYPORT NY 11705
70318	ALLMETAL SCREW PRODUCTS CO INC 821 STEWART AVE GARDEN CITY NY 11530
70485	ATLANTIC INDIA RUBBER WORKS INC 571 W POLK ST CHICAGO IL 60607
71286	REXNORD INC SPECIALTY FASTENER DIV 22 SPRING VALLEY RD P O BOX 98 PARAMUS NJ 07652

CODE	MANUFACTURER'S NAME AND ADDRESS
71400	BUSSMANN MFG DIV MCGRAW-EDISON CO 502 EARTH CITY PLAZA P O BOX 14460 ST LOUIS MO 63178
71468	ITT CANNON ELECTRIC DIV INTERNATIONAL TELEPHONE AND TELEGRAPH CO 666 E DYER RD SANTA ANA CA 92702
71744	CHICAGO MINIATURE/DRAKE 4433 RAVENSWOOD AVE CHICAGO IL 60640
71785	TRW CINCH CONNECTORS 1501 MORSE AVE ELK GROVE VILLAGE IL 60007
72136	ELECTRO MOTIVE CORP SUBSIDIARY OF INTERNATIONAL ELECTRONICS CORP LAUTER AVE P O BOX 7600 FLORENCE SC 29501
72962	ESNA DIV OF AMERACE CORP 2330 VAUXHALL ROAD UNION NJ 07083
72982	ERIE TECHNOLOGICAL PRODUCTS INC 644 W 12TH ST ERIE PA 16512
73386	FREED TRANSFORMER CO INC 1736 WEIRFIELD ST BROOKLYN NY 11227
73899	JFD ELECTRONICS COMPONENTS CORP 15TH AVENUE AND 62ND ST BROOKLYN NY 11219
74921	ITEN FIBRE CO THE 4001 BENEFIT AVE P O BOX 9 ASHTABULA OH 44004
74970	JOHNSON E F CO 299 10TH AVE S W WASECA MN 56093
75543	LAVELLE INDUSTRIES INC 424 N WOOD CHICAGO IL 60622
75915	LITTELFUSE INC 800 E NORTHWEST HWY DES PLAINES IL 60016
77147	PATTON-MACGUYER CO DIV OF AVID CORP 17 VIRGINIA AVE PROVIDENCE RI 02905
77250	PHEOLL MFG CO DIV OF ALLIED PRODUCTS CORP 5700 W ROOSEVELT RD CHICAGO IL 60650

CODE	MANUFACTURER'S NAME AND ADDRESS
78189	ILLINOIS TOOL WORKS INC SHAKEPROOF DIVISION ST CHARLES ROAD ELGIN IL 60120
79807	WROUGHT WASHER MFG INC 2100 S O BAY ST MILWAUKEE WI 53207
79963	ZIERICK MFG CO RADIO CIRCLE MT KISCO NY 10549
80205	NATIONAL AEROSPACE STANDARDS COMMITTEE AEROSPACE INDUSTRIES ASSOCIATION OF AMERICA INC 1725 DE SALES N W WASHINGTON DC 20036
80223	TRW INC TRW UNITED TRANSFORMER DIV 150 VARICK ST NEW YORK NY 10013
81349	MILITARY SPECIFICATION
81483	INTERNATIONAL RECTIFIER 9220 SUNSET BLVD P O BOX 2321 TERMINAL ANNEX LOS ANGELES CA 90054
82389	SWITCHCRAFT INC SUB OF RAYTHEON CO 5555 N ELSTON AVE CHICAGO IL 60630
82877	ROTRON INC 7-9 HASBROUCK LANE WOODSTOCK NY 12498
88044	AERONAUTICAL STANDARDS GROUP DEPARTMENT OF NAVY AND AIR FORCE
88245	LITTON SYSTEMS INC USECO DIV 13536 SATICOY ST VAN NUYS CA 91409
91293	JOHANSON MFG CO P O BOX 329 BOONTON NJ 07005
91836	KINGS ELECTRONICS CO INC 40 MARBLEDALE ROAD TUCKAHOE NY 10707
91886	MALCO A MICRODOT CO 12 PROGRESS DR MONTGOMERYVILLE PA 18936
92825	WHITSO INC 9330 BYRON ST SCHILLER PARK IL 60176
95445	RCA CORP RCA FREQUENCY BUREAU 50 BROAD ST NEW YORK NY 10004
96906	MILITARY STANDARD
96918	KING ELECTRONICS CO., INC. MICRO WAVE DIV. TUCKAHOE, NY
98291	SEALECTRO CORP 225 HOYT MAMARONECK NY 10544
98978	INTERNATIONAL ELECTRONIC RESEARCH CORP 135 W MAGNOLIA BLVD BURBANK CA 91502
99392	MEPCO/ELECTRA INC ROXBORO DIV INDUSTRIAL DR P O BOX 1223 ROXBORO NC 27573
99942	GLOBE-UNION INC CENTRALAB SEMICONDUCTOR CENTRALAB ELECTRONICS DIV 5757 N GREEN BAY RD P O BOX 591 MILWAUKEE WI 53201

1.7 Usable on Codes

The following usable on codes have been assigned in the manual:

USABLE ON CODE	UNIT PART NUMBER	FIG-ITEM
A	622-4127-001	1-
B	622-4127-002	1-
C	622-4127-003	1-
D	629-9950-001	20-
E	629-9951-001	20-
F	622-4127-004	1-

1.8 Reference Designation Prefixes

The following prefixes have been assigned in this manual:

PREFIX	UNIT PART NUMBER	FIG-ITEM
A1	629-9730-002	1-12
A1A1	601-4914-001	2-56
A1A2	601-4913-002	2-55
A2	629-9740-002	1-16
A2A1	638-2470-001	5-2
A2A2	601-4911-001	5-1
A2A3	601-4883-001	5-3
A3	629-9750-002	1-6
A3A1	601-5001-001	9-5
A3A2	601-4915-002	9-4

Parts No. 523-0769256

CODE	MANUFACTURER'S NAME AND ADDRESS
[illegible]	[illegible]
	[illegible]
28480	HEWLETT-PACKARD CO CORPORATE HQ 1501 PAGE MILL RD PALO ALTO CA 94304
29990	AMERICAN TECHNICAL CERAMICS DIVISION OF PHASE INDUSTRIES 1 NORDEN LANE HUNTINGTON STATION NY 11746
31918	ITT SCHADOW INC 8081 WALLACE RD EDEN PRAIRIE MN 55343
32559	BIVAR INC 1617 E EDINGER AVE SANTA ANA CA 92705
34335	ADVANCED MICRO DEVICES 901 THOMPSON PL SUNNYVALE CA 94086
34371	HARRIS SEMICONDUCTOR DIV OF HARRIS CORP P O BOX 883 MELBOURNE FL 32901
34649	INTEL CORP 3065 BOWERS AVE SANTA CLARA CA 95051
34696	CUSTOM PRODUCTS CO 11626 - 11636 TUXFORD ST P O BOX 699 SUN VALLEY CA 91352
49956	RAYTHEON CO 141 SPRING ST LEXINGTON MA 02173
56289	SPRAGUE ELECTRIC CO NORTH ADAMS MA 01247
56878	SPS TECHNOLOGIES INC HIGHLAND AVE JENKINTOWN PA 19046
57771	STIMPSON EDWIN B CO INC 900 SYLVAN AVE BAYPORT NY 11705
70318	ALLMETAL SCREW PRODUCTS CO INC 821 STEWART AVE GARDEN CITY NY 11530
70485	ATLANTIC INDIA RUBBER WORKS INC 571 W POLK ST CHICAGO IL 60607
71286	REXNORD INC SPECIALTY FASTENER DIV 22 SPRING VALLEY RD P O BOX 98 PARAMUS NJ 07652

CODE	MANUFACTURER'S NAME AND ADDRESS
71400	BUSSMANN MFG DIV MCGRAW-EDISON CO 502 EARTH CITY PLAZA P O BOX 14460 ST LOUIS MO 63178
71468	ITT CANNON ELECTRIC DIV INTERNATIONAL TELEPHONE AND TELEGRAPH CO 666 E DYER RD SANTA ANA CA 92702
71744	CHICAGO MINIATURE/DRAKE 4433 RAVENSWOOD AVE CHICAGO IL 60640
71785	TRW CINCH CONNECTORS 1501 MORSE AVE ELK GROVE VILLAGE IL 60007
72136	ELECTRO MOTIVE CORP SUBSIDIARY OF INTERNATIONAL ELECTRONICS CORP LAUTER AVE P O BOX 7600 FLORENCE SC 29501
72962	ESNA DIV OF AMERACE CORP 2330 VAUXHALL ROAD UNION NJ 07083
72982	ERIE TECHNOLOGICAL PRODUCTS INC 644 W 12TH ST ERIE PA 16512
73386	FREED TRANSFORMER CO INC 1736 WEIRFIELD ST BROOKLYN NY 11227
73899	JFD ELECTRONICS COMPONENTS CORP 15TH AVENUE AND 62ND ST BROOKLYN NY 11219
74921	ITEN FIBRE CO THE 4001 BENEFIT AVE P O BOX 9 ASHTABULA OH 44004
74970	JOHNSON E F CO 299 10TH AVE S W WASECA MN 56093
75543	LAVELLE INDUSTRIES INC 424 N WOOD CHICAGO IL 60622
75915	LITTELFUSE INC 800 E NORTHWEST HWY DES PLAINES IL 60016
77147	PATTON-MACGUYER CO DIV OF AVID CORP 17 VIRGINIA AVE PROVIDENCE RI 02905
77250	PHEOLL MFG CO DIV OF ALLIED PRODUCTS CORP 5700 W ROOSEVELT RD CHICAGO IL 60650

CODE	MANUFACTURER'S NAME AND ADDRESS
78189	ILLINOIS TOOL WORKS INC SHAKEPROOF DIVISION ST CHARLES ROAD ELGIN IL 60120
79807	WROUGHT WASHER MFG INC 2100 S O BAY ST MILWAUKEE WI 53207
79963	ZIERICK MFG CO RADIO CIRCLE MT KISCO NY 10549
80205	NATIONAL AEROSPACE STANDARDS COMMITTEE AEROSPACE INDUSTRIES ASSOCIATION OF AMERICA INC 1725 DE SALES N W WASHINGTON DC 20036
80223	TRW INC TRW UNITED TRANSFORMER DIV 150 VARICK ST NEW YORK NY 10013
81349	MILITARY SPECIFICATION
81483	INTERNATIONAL RECTIFIER 9220 SUNSET BLVD P O BOX 2321 TERMINAL ANNEX LOS ANGELES CA 90054
82389	SWITCHCRAFT INC SUB OF RAYTHEON CO 5555 N ELSTON AVE CHICAGO IL 60630
82877	ROTRON INC 7-9 HASBROUCK LANE WOODSTOCK NY 12498
88044	AERONAUTICAL STANDARDS GROUP DEPARTMENT OF NAVY AND AIR FORCE
88245	LITTON SYSTEMS INC USECO DIV 13536 SATICOY ST VAN NUYS CA 91409
91293	JOHANSON MFG CO P O BOX 329 BOONTON NJ 07005
91836	KINGS ELECTRONICS CO INC 40 MARBLEDALE ROAD TUCKAHOE NY 10707
91886	MALCO A MICRODOT CO 12 PROGRESS DR MONTGOMERYVILLE PA 18936
92825	WHITSO INC 9330 BYRON ST SCHILLER PARK IL 60176
95445	RCA CORP RCA FREQUENCY BUREAU 50 BROAD ST NEW YORK NY 10004
96906	MILITARY STANDARD
96918	KING ELECTRONICS CO., INC. MICRO WAVE DIV. TUCKAHOE, NY
98291	SEALECTRO CORP 225 HOYT MAMARONECK NY 10544
98978	INTERNATIONAL ELECTRONIC RESEARCH CORP 135 W MAGNOLIA BLVD BURBANK CA 91502
99392	MEPCO/ELECTRA INC ROXBORO DIV INDUSTRIAL DR P O BOX 1223 ROXBORO NC 27573
99942	GLOBE-UNION INC CENTRALAB SEMICONDUCTOR CENTRALAB ELECTRONICS DIV 5757 N GREEN BAY RD P O BOX 591 MILWAUKEE WI 53201

1.7 Usable on Codes

The following usable on codes have been assigned in the manual:

USABLE ON CODE	UNIT PART NUMBER	FIG-ITEM
A	622-4127-001	1-
B	622-4127-002	1-
C	622-4127-003	1-
D	629-9950-001	20-
E	629-9951-001	20-
F	622-4127-004	1-

1.8 Reference Designation Prefixes

The following prefixes have been assigned in this manual:

PREFIX	UNIT PART NUMBER	FIG-ITEM
A1	629-9730-002	1-12
A1A1	601-4914-001	2-56
A1A2	601-4913-002	2-55
A2	629-9740-002	1-16
A2A1	638-2470-001	5-2
A2A2	601-4911-001	5-1
A2A3	601-4883-001	5-3
A3	629-9750-002	1-6
A3A1	601-5001-001	9-5
A3A2	601-4915-002	9-4

PREFIX	UNIT PART NUMBER	FIG-ITEM
A3A3	601-5261-001	9-3
A4	629-9760-001	1-7
A4A1	635-8516-001	13-27
A4A1A1	637-2720-001	14-30
A4A2	637-2718-001	13-18
A4A2	634-9681-001	13-18
A4A3	635-8517-001	13-16
A4A4	277-0442-020	13-4
A5	629-9770-002	1-5
A5A1	629-9889-002	17-5
A5A2	601-5221-001	17-35
A5A3	629-9950-001	17-19
A5A4	629-9951-001	17-16
A6	629-9780-002	1-8
A7	601-5938-001	24-15
A8	601-5881-001	1-4
A9	601-5882-001	1-17
A10	601-5883-001	1-3
A10	601-2309-001	1-3

CI/ REV LTR	UNIT PART NUMBER	FIG-ITEM
B	629-9950-001	20-
B	629-9951-001	20-
K	629-9780-002	24-
C	601-5938-001	24-15
D	601-5881-001	21-
E	601-5882-001	22-
F	601-5883-001	23-
B	634-9681-001	25-
	601-2309-001	26-

1.9 Configuration Identifiers

The following CI's/REV LTR's were used in compiling data for this manual:

CI/ REV LTR	UNIT PART NUMBER	FIG-ITEM
T	622-4127-003	1-
T	622-4127-002	1-
T	622-4127-001	1-
T	622-4127-004	1-
G	629-9730-002	2-
H	601-4914-001	3-
E	601-4913-002	4-
G	629-9740-002	5-
J	638-2470-001	6-
C	601-2099-001	6-10
L	601-4911-001	7-
R	601-4883-001	8-
G	629-9750-002	9-
P	601-5001-001	10-
Y	601-4915-002	11-
H	601-5261-001	12-
T	629-9760-001	13-
G	635-8516-001	14-
P	637-2720-001	15-
E	637-2718-001	16-
C	635-8517-001	13-16
L	629-9770-002	17-
F	629-9889-002	18-
C	601-5221-001	19-

2. GROUP ASSEMBLY PARTS LIST

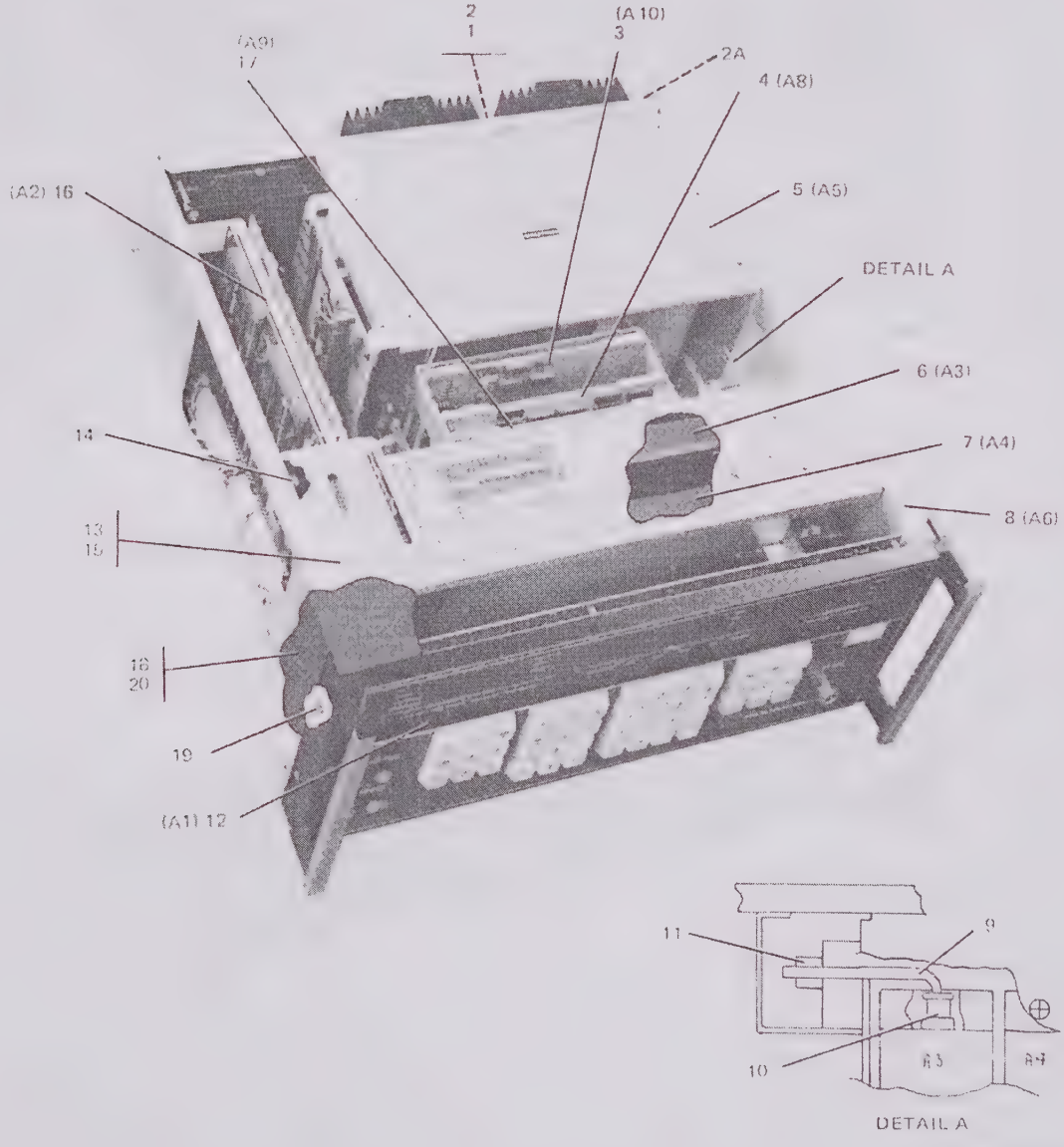

479S-6A VOR/ILS Signal Generator
Figure 1

GROUP ASSEMBLY PARTS LIST

FIG-ITEM	PART NO	INDENT	DESCRIPTION	UNITS PER ASSY	USABLE ON CODE
1-	622-4127-001	1	VOR/ILS SIGNAL GENERATOR 479S-6A	REF	A
	622-4127-002	1	VOR/ILS SIGNAL GENERATOR 479S-6A	REF	B
	622-4127-003	1	VOR/ILS SIGNAL GENERATOR 479S-6A	REF	C
	622-4127-004	1	VOR/ILS SIGNAL GENERATOR 479S-6A	REF	F
1	635-2283-000	2	PLATE, IDENT	1	
	MS51957-2	2	SCREW,MACH SST, 2-56 X 3/16 (96906) 343-0123-000 (AP)	2	
2	609-3929-001	2	PLATE, MODIFICATION	1	
2A	KC89-93	2	COVER,CONN (96918) 357-0093-010 (EFF REV LTR F)	1	
	MS51957-28	2	SCREW,MACH SST, 6-32 X 3/8 (96906) 343-0169-000 (AP) (EFF REV LTR F)	1	
3	601-5383-001	2	IEEE-488/1978 BUS INTERFACE ASSEMBLY (ESDS) A10 (SEE FIG 23)(EFF TO REV LTR T)(SS10)	1	C,F
3	601-2309-001	2	IEEE-488/1978 BUS INTERFACE ASSEMBLY (ESDS) A10 (SEE FIG 26)(EFF REV LTR T)(SS10)	1	C,F
4	601-5381-001	2	REMOTE TUNE ASSEMBLY (ESDS) A8 (SEE FIG 21)	1	
5	629-9770-002	2	POWER SUPPLY ASSY A5 (SEE FIG 17)	1	
	MS51957-27	2	SCREW,MACH SST, 6-32 X 5/16 (96906) 343-0168-000 (AP)	7	
	MS51959-27	2	SCREW,MACH SST, 6-32 X 5/16 (96906) 342-0061-000 (AP)	6	
6	629-9750-002	2	RF MODULATOR ASSEMBLY (ESDS) A3 (SEE FIG 9)	1	
	MS51957-28	2	SCREW,MACH SST, 6-32 X 3/8 (96906) 343-0169-000 (AP)	2	
7	629-9760-001	2	SYNTHESIZER ASSY (ESDS) A4 (SEE FIG 13)	1	
	MS51957-52	2	SCREW,MACH SST, 6-32 X 1-3/4 (96906) 343-0197-000 (AP)	4	
	MS35338-137	2	WASHER,LOCK SST, 0.168 ID X 0.295 OD (96906) 310-0072-000 (AP)	4	
	310-0048-000	2	WASHER,FLAT SST, 0.172 ID X 0.437 OD (79807) (AP)	4	
8	629-9780-002	2	CHASSIS ASSY A6 (SEE FIG 24)	1	
9	629-9782-001	2	CABLE ASSY	1	
10	52-309-9702	3	CONNECTOR,PLUG ELEC (98291) 357-7207-290	1	
11	MS9012-79-3005	3	CONNECTOR,PLUG ELEC (81349) 357-7541-010	1	
12	629-9730-002	2	FRONT PANEL ASSY (ESDS) A1 (SEE FIG 2)	1	
	MS51958-63	2	SCREW,MACH SST, 10-32 X 1/2 (96906) 343-0228-000 (AP)	4	
	MS35338-138	2	WASHER,LOCK SST, 0.194 ID X 0.334 OD (96906) 310-0084-000 (AP)	4	
13	629-9738-001	2	BRACKET, MODULE (EFF TO REV LTR E)	1	
13	629-9738-003	2	BRACKET, MODULE (EFF REV LTR E)	1	
	MS51957-27	2	SCREW,MACH SST, 6-32 X 5/16 (96906) 343-0168-000 (AP)	4	
	MS51957-28	2	SCREW,MACH SST, 6-32 X 3/8 (96906) 343-0169-000 (AP)	2	
14	F12NCFMA2-62	3	NUT,SLFLKG CD PL STL, 6-32 (72962) 333-0842-000	4	
15	629-9739-002	3	BRACKET, MODULE (EFF TO REV LTR E)	1	
15	629-9738-004	3	BRACKET, MODULE (EFF REV LTR E)	1	
16	629-9740-002	2	CONTROLLER/AUDIO ASSY (ESDS) A2 (SEE FIG 5)	1	
17	601-5390-001	2	STORE/RECALL ASSEMBLY (ESDS) A9 (SEE FIG 22)	1	B,C
18	629-9747-001	2	COVER	1	
	MS51959-27	2	SCREW,MACH SST, 6-32 X 5/16 (96906) 342-0061-000 (AP)	6	
	B330-4058-030	2	SCREW,MACH SST, 6-32 X 3/8 (77250) 330-4058-030 (AP) (EFF REV LTR K)	4	
19	F12NCFMA2-62	3	NUT,SLFLKG CD PL STL, 6-32 (72962) 333-0842-000	4	
20	629-9747-002	3	COVER	1	

GROUP ASSEMBLY PARTS LIST

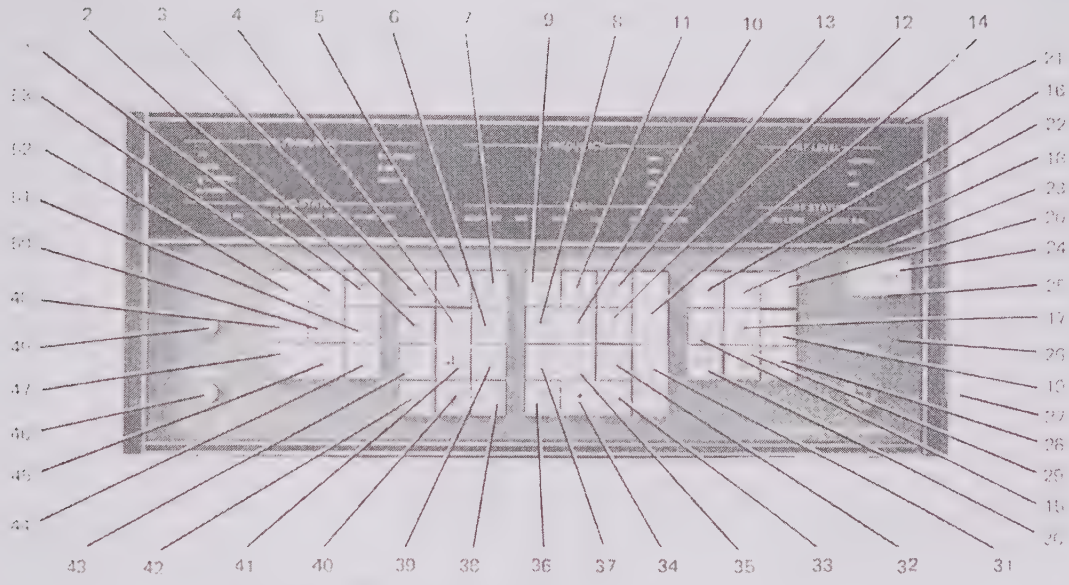

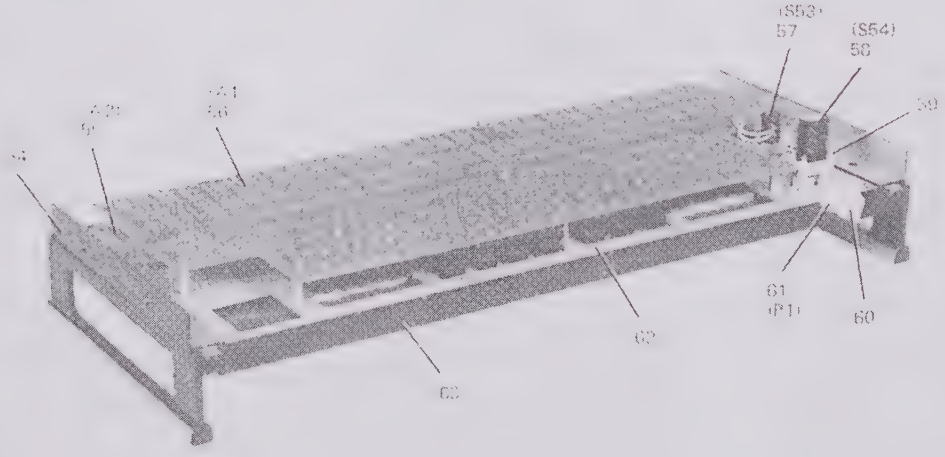

Front Panel Assembly A1
Figure 2

GROUP ASSEMBLY PARTS LIST

FIG-ITEM	PART NO	INDENT	DESCRIPTION	UNITS PER ASSY	USABLE ON CODE
2-	629-9730-002	1	FRONT PANEL ASSY (ESDS) A1 (SEE FIG 1-12 FOR NHA)	REF	
1	629-9745-028	2	LENS, SWITCH- MODIFIED	1	
2	629-9745-014	2	LENS, SWITCH- MODIFIED	1	
3	629-9745-011	2	LENS, SWITCH- MODIFIED	1	
4	629-9745-015	2	LENS, SWITCH- MODIFIED	1	
5	629-9745-012	2	LENS, SWITCH- MODIFIED	1	
6	629-9745-010	2	LENS, SWITCH- MODIFIED	1	
7	629-9745-013	2	LENS, SWITCH- MODIFIED	1	
8	629-9978-015	2	LENS, SWITCH- MODIFIED	1	
9	629-9978-018	2	LENS, SWITCH- MODIFIED	1	
10	629-9978-016	2	LENS, SWITCH- MODIFIED	1	
11	629-9978-019	2	LENS, SWITCH- MODIFIED	1	
12	629-9978-017	2	LENS, SWITCH- MODIFIED	1	
13	629-9978-020	2	LENS, SWITCH- MODIFIED	1	
14	629-9768-001	2	LENS, SWITCH- MODIFIED	1	
15	629-9745-004	2	LENS, SWITCH- MODIFIED	1	
16	629-9745-001	2	LENS, SWITCH- MODIFIED	1	
17	629-9745-005	2	LENS, SWITCH- MODIFIED	1	
18	629-9745-002	2	LENS, SWITCH- MODIFIED	1	
19	629-9745-006	2	LENS, SWITCH- MODIFIED	1	
20	629-9745-003	2	LENS, SWITCH- MODIFIED	1	
21	629-9734-001	2	EDGE, BAR	2	
22	629-9675-002	2	WINDOW	1	
23	635-9615-001	2	SUPPORT, PANEL	1	
24	623-9022-002	2	LOGO	1	
25	632-5203-001	2	HOLDER, IDENT	1	
	P330-2290-000	2	SCREW,MACH SST, 4-40 X 1/4 (77250) 330-2290-000 (AP)	2	
	P313-0132-000	2	NUT,PLAIN,HEX SST, 4-40 (77250) 313-0132-000 (AP)	2	
	MS35338-135	2	WASHER,LOCK SST, 0.115 ID X 0.209 OD (96906) 310-0279-000 (AP)	2	
26	629-9742-002	2	PLATE, OVERLAY	1	
27	629-9731-004	2	FLANGE, CHASSIS	2	
28	629-9745-009	2	LENS, SWITCH- MODIFIED	1	
29	629-9745-008	2	LENS, SWITCH- MODIFIED	1	
30	629-9745-007	2	LENS, SWITCH- MODIFIED	1	
31	629-9768-002	2	LENS, SWITCH- MODIFIED	1	
32	629-9978-014	2	LENS, SWITCH- MODIFIED	1	
33	629-9745-033	2	LENS, SWITCH- MODIFIED	1	
34	629-9978-031	2	LENS, SWITCH- MODIFIED	1	
35	629-9978-013	2	LENS, SWITCH- MODIFIED	1	
36	629-9978-011	2	LENS, SWITCH- MODIFIED	1	
37	629-9978-012	2	LENS, SWITCH- MODIFIED	1	
38	629-9745-021	2	LENS, SWITCH- MODIFIED	1	
39	629-9745-019	2	LENS, SWITCH- MODIFIED	1	
40	629-9745-018	2	LENS, SWITCH- MODIFIED	1	
41	629-9745-016	2	LENS, SWITCH- MODIFIED	1	
42	629-9745-020	2	LENS, SWITCH- MODIFIED	1	
43	629-9745-017	2	LENS, SWITCH- MODIFIED	1	
44	629-9745-022	2	LENS, SWITCH- MODIFIED	1	
45	629-9745-023	2	LENS, SWITCH- MODIFIED	1	
46	F1-12H4	2	BUTTON,PUSH (31918) 266-7508-260	1	
47	629-9745-024	2	LENS, SWITCH- MODIFIED	1	
48	629-9745-032	2	LENS, SWITCH- MODIFIED	1	
49	F1-12H4	2	BUTTON,PUSH (31918) 266-7508-260	1	
50	629-9745-026	2	LENS, SWITCH- MODIFIED	1	
51	629-9745-025	2	LENS, SWITCH- MODIFIED	1	
52	629-9745-030	2	LENS, SWITCH- MODIFIED	1	
53	629-9745-029	2	LENS, SWITCH- MODIFIED	1	
54	629-9733-004	2	BRACKET, ANGLE	2	
	MS51959-27	2	SCREW,MACH SST, 6-32 X 5/16 (96906) 342-0061-000 (AP)	2	
55	601-4913-002	2	DISPLAY BOARD ASSEMBLY A1A2 (SEE FIG 4)	1	
	330-1716-030	2	SCREW,SLFLKG SST, 2-56 X 1/4 (56878) (AP)	3	
56	601-4914-001	2	KEYBOARD/DRIVER BOARD (ESDS) A1A1 (SEE FIG 3)	1	

GROUP ASSEMBLY PARTS LIST

FIG-ITEM	PART NO	INDENT	DESCRIPTION	UNITS PER ASSY	USABLE ON CODE
2-	P313-0132-000	2	NUT,PLAIN,HEX SST, 4-40 (77250) 313-0132-000 (AP)	8	
	330-1716-030	2	SCREW,SLFLKG SST, 2-56 X 1/4 (56878) (AP)	8	
	768-3177-022	2	POST (AP)	8	
57	266-7508-090	2	SWITCH,PUSH A1S53	1	
	MS51957-2	2	SCREW,MACH SST, 2-56 X 3/16 (96906) 343-0123-000 (AP)	4	
	MS35338-134	2	WASHER,LOCK SST, 0.088 ID X 0.172 OD (96906) 310-0275-000 (AP)	4	
	540-9002-003	2	POST (AP)	2	
58	NE15F01-0003-00	2	SWITCH,PUSH (31918) 266-7524-010 A1S54	1	
	MS51957-2	2	SCREW,MACH SST, 2-56 X 3/16 (96906) 343-0123-000 (AP)	4	
	MS35338-134	2	WASHER,LOCK SST, 0.088 ID X 0.172 OD (96906) 310-0275-000 (AP)	4	
	540-9002-003	2	POST (AP)	2	
59	01-0003-00	2	SWITCH,PUSH (31918) 266-7508-120	1	
60	1560TL	2	PIN CONTACT (27264) 372-5909-030	4	
61	1625-6P1	2	CONNECTOR,PLUG ELEC (27264) 372-5909-230 A1P1	1	
62	629-9737-001	2	PLATE, BASE	1	
	MS51957-13	2	SCREW,MACH STL, 4-40 X 1/4 (96906) 343-0133-000 (AP)	10	
	MS35338-135	2	WASHER,LOCK SST, 0.115 ID X 0.209 OD (96906) 310-0279-000 (AP)	10	
63	629-9613-001	2	BRACKET, ANGLE	1	
	MS51957-14	2	SCREW,MACH SST, 4-40 X 5/16 (96906) 343-0134-000 (AP)	2	
	MS35338-135	2	WASHER,LOCK SST, 0.115 ID X 0.209 OD (96906) 310-0279-000 (AP)	2	

GROUP ASSEMBLY PARTS LIST

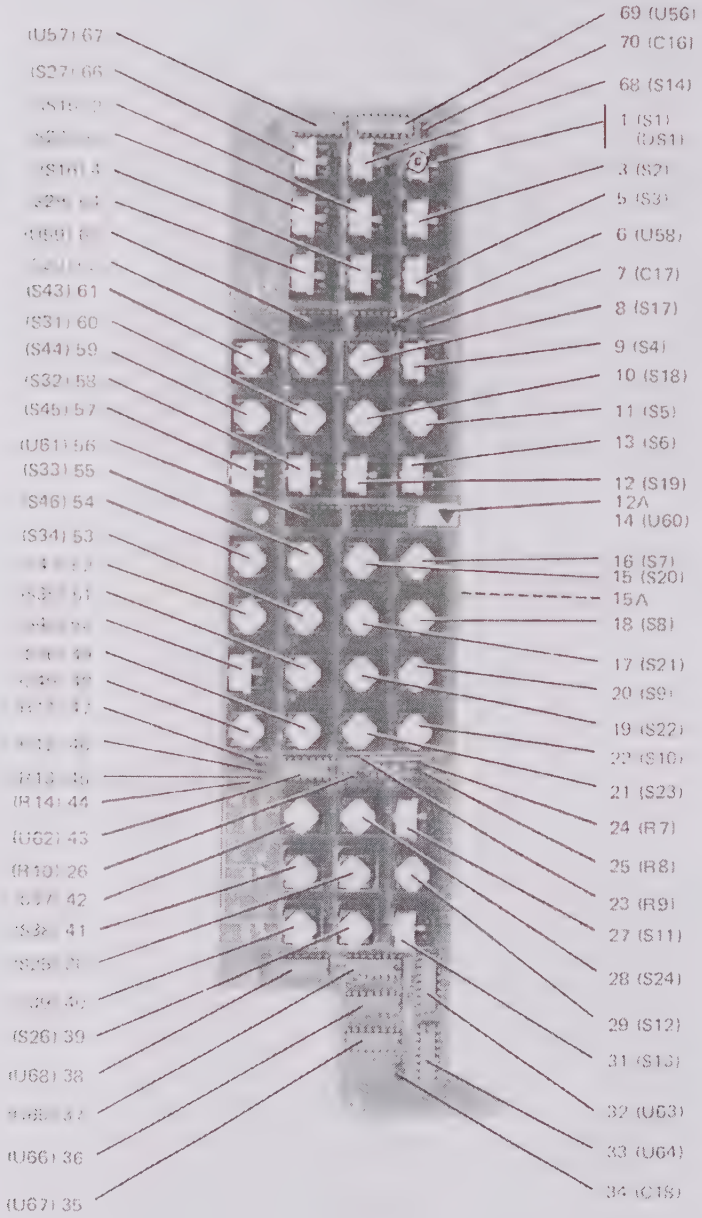

TP5-5378-027

Keyboard/Driver Board A1A1
Figure 3 (Sheet 1 of 2)

GROUP ASSEMBLY PARTS LIST

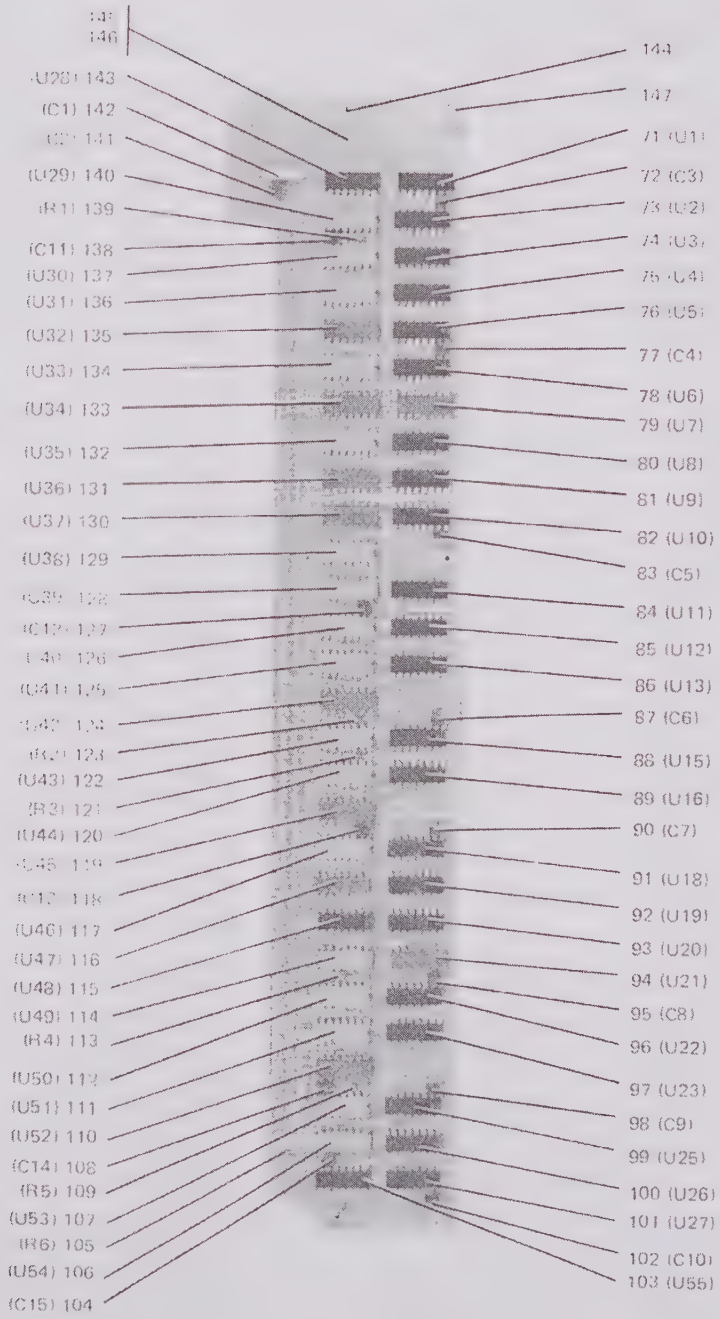

TP5-5378-027

Keyboard/Driver Board A1A1
Figure 2 (Sheet 2)

GROUP ASSEMBLY PARTS LIST

FIG-ITEM	PART NO	INDENT	DESCRIPTION	UNITS PER ASSY	USABLE ON CODE
3-	601-4914-001	1	KEYBOARD/DRIVER BOARD (ESDS) A1A1 (SEE FIG 2-56 FOR NHA)	REF	
1	DC51-64	2	SWITCH,PUSH (A1643) 266-7532-020 A1A1S1	1	
	CM7219	3	LAMP,INCAND (71744) 262-2730-000 (P/O A1A1S1)	1	
2	DC51-64	2	SWITCH,PUSH (A1643) 266-7532-020 A1A1S15	1	
	CM7219	3	LAMP,INCAND (71744) 262-2730-000 (P/O A1A1S15)	1	
3	DC51-64	2	SWITCH,PUSH (A1643) 266-7532-020 A1A1S2	1	
	CM7219	3	LAMP,INCAND (71744) 262-2730-000 (P/O A1A1S2)	1	
4	DC51-64	2	SWITCH,PUSH (A1643) 266-7532-020 A1A1S16	1	
	CM7219	3	LAMP,INCAND (71744) 262-2730-000 (P/O A1A1S16)	1	
5	DC51-64	2	SWITCH,PUSH (A1643) 266-7532-020 A1A1S3	1	
	CM7219	3	LAMP,INCAND (71744) 262-2730-000 (P/O A1A1S3)	1	
6	SN74LS174N	2	INTEGRATED CIRCUIT (34335) 351-1529-040 A1A1U58	1	
7	CK05BX103K	2	CAPACITOR,FXD CER DIEL, 0.01UF, PORM10%, 100V (81349) 913-5019-200 A1A1C17	1	
8	DC51-01	2	SWITCH,PUSH (A1643) 266-7532-010 A1A1S17	1	
9	DC51-64	2	SWITCH,PUSH (A1643) 266-7532-020 A1A1S4	1	
	CM7219	3	LAMP,INCAND (71744) 262-2730-000 (P/O A1A1S4)	1	
10	DC51-01	2	SWITCH,PUSH (A1643) 266-7532-010 A1A1S18	1	
11	DC51-01	2	SWITCH,PUSH (A1643) 266-7532-010 A1A1S5	1	
12	DC51-64	2	SWITCH,PUSH (A1643) 266-7532-020 A1A1S19	1	
	CM7219	2	LAMP,INCAND (71744) 262-2730-000 (P/O A1A1S19)	1	
12A	280-2745-010	2	LABEL,PRESS SENS (12998) (EFF REV LTR H)	1	
13	DC51-64	2	SWITCH,PUSH (A1643) 266-7532-020 A1A1S6	1	
	CM7219	3	LAMP,INCAND (71744) 262-2730-000 (P/O A1A1S6)	1	
14	SN74LS174N	2	INTEGRATED CIRCUIT (34335) 351-1529-040 A1A1U60	1	
15	DC51-01	2	SWITCH,PUSH (A1643) 266-7532-010 A1A1S20	1	
15A	280-2745-010	2	LABEL,PRESS SENS (12998) (EFF REV LTR H)	1	
16	DC51-01	2	SWITCH,PUSH (A1643) 266-7532-010 A1A1S7	1	
17	DC51-01	2	SWITCH,PUSH (A1643) 266-7532-010 A1A1S21	1	
18	DC51-01	2	SWITCH,PUSH (A1643) 266-7532-010 A1A1S8	1	
19	DC51-01	2	SWITCH,PUSH (A1643) 266-7532-010 A1A1S22	1	
20	DC51-01	2	SWITCH,PUSH (A1643) 266-7532-010 A1A1S9	1	
21	DC51-01	2	SWITCH,PUSH (A1643) 266-7532-010 A1A1S23	1	
22	DC51-01	2	SWITCH,PUSH (A1643) 266-7532-010 A1A1S10	1	
23	RCR05G102KS	2	RESISTOR,FXD CMPSN, 1K, 10%, 1/8W (81349) 745-2341-000 A1A1R9	1	
24	RCR05G102KS	2	RESISTOR,FXD CMPSN, 1K, 10%, 1/8W (81349) 745-2341-000 A1A1R7	1	
25	RCR05G102KS	2	RESISTOR,FXD CMPSN, 1K, 10%, 1/8W (81349) 745-2341-000 A1A1R8	1	
26	RCR05G102KS	2	RESISTOR,FXD CMPSN, 1K, 10%, 1/8W (81349) 745-2341-000 A1A1R10	1	
27	DC51-64	2	SWITCH,PUSH (A1643) 266-7532-020 A1A1S11	1	
	CM7219	3	LAMP,INCAND (71744) 262-2730-000 (P/O A1A1S11)	1	
28	DC51-01	2	SWITCH,PUSH (A1643) 266-7532-010 A1A1S24	1	
29	DC51-01	2	SWITCH,PUSH (A1643) 266-7532-010 A1A1S12	1	
30	DC51-01	2	SWITCH,PUSH (A1643) 266-7532-010 A1A1S25	1	
31	DC51-64	2	SWITCH,PUSH (A1643) 266-7532-020 A1A1S13	1	
	CM7219	3	LAMP,INCAND (71744) 262-2730-000 (P/O A1A1S13)	1	
32	N8T97N	2	INTEGRATED CIRCUIT (18324) 351-1267-020 A1A1U63	1	
33	SN74LS74AN	2	INTEGRATED CIRCUIT FLIP FLOP (04713) 351-1525-040 A1A1U64	1	
34	CK05BX103K	2	CAPACITOR,FXD CER DIEL, 0.01UF, PORM10%, 100V (81349) 913-5019-200 A1A1C18	1	
35	N8T97N	2	INTEGRATED CIRCUIT (18324) 351-1267-020 A1A1U67	1	
36	N8T97N	2	INTEGRATED CIRCUIT (18324) 351-1267-020 A1A1U66	1	
37	SN74LS174N	2	INTEGRATED CIRCUIT (34335) 351-1529-040 A1A1U65	1	
38	ULN2003A	2	INTEGRATED CIRCUIT (56289) 351-0196-010 A1A1U68	1	
39	DC51-01	2	SWITCH,PUSH (A1643) 266-7532-010 A1A1S26	1	
40	DC51-01	2	SWITCH,PUSH (A1643) 266-7532-010 A1A1S39	1	
41	DC51-01	2	SWITCH,PUSH (A1643) 266-7532-010 A1A1S38	1	
42	DC51-01	2	SWITCH,PUSH (A1643) 266-7532-010 A1A1S37	1	

GROUP ASSEMBLY PARTS LIST

FIG-ITEM	PART NO	INDENT	DESCRIPTION	UNITS PER ASSY	USABLE ON CODE
3-43	SN74LS174N	2	INTEGRATED CIRCUIT (34335) 351-1529-040 A1A1U62	1	
44	RCR05G102KS	2	RESISTOR,FXD CMPSN, 1K, 10%, 1/8W (81349) 745-2341-000 A1A1P14	1	
45	RCR05G102KS	2	RESISTOR,FXD CMPSN, 1K, 10%, 1/8W (81349) 745-2341-000 A1A1R13	1	
46	RCR05G102KS	2	RESISTOR,FXD CMPSN, 1K, 10%, 1/8W (81349) 745-2341-000 A1A1P12	1	
47	RCR05G102KS	2	RESISTOR,FXD CMPSN, 1K, 10%, 1/8W (81349) 745-2341-000 A1A1P11	1	
48	DC51-01	2	SWITCH,PUSH (A1643) 266-7532-010 A1A1S49	1	
49	DC51-01	2	SWITCH,PUSH (A1643) 266-7532-010 A1A1S36	1	
50	DC51-64	2	SWITCH,PUSH (A1643) 266-7532-020 A1A1S48	1	
	CM7219	3	LAMP,INCAND (71744) 262-2730-000 (P/O A1A1S48)	1	
51	DC51-01	2	SWITCH,PUSH (A1643) 266-7532-010 A1A1S35	1	
52	DC51-01	2	SWITCH,PUSH (A1643) 266-7532-010 A1A1S47	1	
53	DC51-01	2	SWITCH,PUSH (A1643) 266-7532-010 A1A1S34	1	
54	DC51-01	2	SWITCH,PUSH (A1643) 266-7532-010 A1A1S46	1	
55	DC51-01	2	SWITCH,PUSH (A1643) 266-7532-010 A1A1S33	1	
56	ULN2003A	2	INTEGRATED CIRCUIT (56289) 351-0196-010 A1A1U61	1	
57	DC51-64	2	SWITCH,PUSH (A1643) 266-7532-020 A1A1S45	1	
	CM7219	3	LAMP,INCAND (71744) 262-2730-000 (P/O A1A1S45)	1	
58	DC51-64	2	SWITCH,PUSH (A1643) 266-7532-020 A1A1S32	1	
	CM7219	3	LAMP,INCAND (71744) 262-2730-000 (P/O A1AS32)	1	
59	DC51-01	2	SWITCH,PUSH (A1643) 266-7532-010 A1A1S44	1	
60	DC51-01	2	SWITCH,PUSH (A1643) 266-7532-010 A1A1S31	1	
61	DC51-01	2	SWITCH,PUSH (A1643) 266-7532-010 A1A1S43	1	
62	DC51-01	2	SWITCH,PUSH (A1643) 266-7532-010 A1A1S30	1	
63	ULN2003A	2	INTEGRATED CIRCUIT (56289) 351-0196-010 A1A1U59	1	
64	DC51-64	2	SWITCH,PUSH (A1643) 266-7532-020 A1A1S29	1	
	CM7219	3	LAMP,INCAND (71744) 262-2730-000 (P/O A1A1S29)	1	
65	DC51-64	2	SWITCH,PUSH (A1643) 266-7532-020 A1A1S28	1	
	CM7219	3	LAMP,INCAND (71744) 262-2730-000 (P/O A1A1S28)	1	
66	DC51-64	2	SWITCH,PUSH (A1643) 266-7532-020 A1A1S27	1	
	CM7219	3	LAMP,INCAND (71744) 262-2730-000 (P/O A1A1S27)	1	
67	ULN2003A	2	INTEGRATED CIRCUIT (56289) 351-0196-010 A1A1U57	1	
68	DC51-64	2	SWITCH,PUSH (A1643) 266-7532-020 A1A1S14	1	
	CM7219	3	LAMP,INCAND (71744) 262-2730-000 (P/O A1A1S14)	1	
69	SN74LS174N	2	INTEGRATED CIRCUIT (34335) 351-1529-040 A1A1U56	1	
70	CK05BX103K	2	CAPACITOR,FXD CER DIEL, 0.01UF, PORM10%, 100V (81349) 913-5019-200 A1A1C16	1	
71	N74LS00N	2	INTEGRATED CIRCUIT LOGIC GATE (18324) 351-1523-110 A1A1U1	1	
72	CK05BX103K	2	CAPACITOR,FXD CER DIEL, 0.01UF, PORM10%, 100V (81349) 913-5019-200 A1A1C3	1	
73	SN74LS174N	2	INTEGRATED CIRCUIT (34335) 351-1529-040 A1A1U2	1	
74	SN74LS174N	2	INTEGRATED CIRCUIT (34335) 351-1529-040 A1A1U3	1	
75	SN74LS174N	2	INTEGRATED CIRCUIT (34335) 351-1529-040 A1A1U4	1	
76	SN74LS133N	2	INTEGRATED CIRCUIT (04713) 351-1526-030 A1A1U5	1	
77	CK05BX103K	2	CAPACITOR,FXD CER DIEL, 0.01UF, PORM10%, 100V (81349) 913-5019-200 A1A1C4	1	
78	SN74LS174N	2	INTEGRATED CIRCUIT (34335) 351-1529-040 A1A1U6	1	
79	SN7406N	2	INTEGRATED CIRCUIT (01295) 351-7632-010 A1A1U7	1	
80	SN74LS174N	2	INTEGRATED CIRCUIT (34335) 351-1529-040 A1A1U8	1	
81	SN74LS174N	2	INTEGRATED CIRCUIT (34335) 351-1529-040 A1A1U9	1	
82	SN74LS174N	2	INTEGRATED CIRCUIT (34335) 351-1529-040 A1A1U10	1	
83	CK05BX103K	2	CAPACITOR,FXD CER DIEL, 0.01UF, PORM10%, 100V (81349) 913-5019-200 A1A1C5	1	
84	SN74LS174N	2	INTEGRATED CIRCUIT (34335) 351-1529-040 A1A1U11	1	
85	SN74LS174N	2	INTEGRATED CIRCUIT (34335) 351-1529-040 A1A1U12	1	
86	SN74LS174N	2	INTEGRATED CIRCUIT (34335) 351-1529-040 A1A1U13	1	
87	CK05BX103K	2	CAPACITOR,FXD CER DIEL, 0.01UF, PORM10%, 100V (81349) 913-5019-200 A1A1C6	1	
88	SN74LS174N	2	INTEGRATED CIRCUIT (34335) 351-1529-040 A1A1U15	1	

GROUP ASSEMBLY PARTS LIST

FIG-ITEM	PART NO	INDENT	DESCRIPTION	UNITS PER ASSY	USABLE ON CODE
3-89	SN74LS174N	2	INTEGRATED CIRCUIT (34335) 351-1529-040 A1A1U16	1	
90	CK05BX103K	2	CAPACITOR,FXD CER DIEL, 0.01UF, PCRM10%, 100V (81349) 913-5019-200 A1A1C7	1	
91	SN74LS174N	2	INTEGRATED CIRCUIT (34335) 351-1529-040 A1A1U18	1	
92	SN74LS138N	2	INTEGRATED CIRCUIT (04713) 351-1526-030 A1A1U19	1	
93	SN74LS174N	2	INTEGRATED CIRCUIT (34335) 351-1529-040 A1A1U20	1	
94	SN7406N	2	INTEGRATED CIRCUIT (01295) 351-7632-010 A1A1U21	1	
95	CK05BX103K	2	CAPACITOR,FXD CER DIEL, 0.01UF, PCRM10%, 100V (81349) 913-5019-200 A1A1C8	1	
96	SN74LS174N	2	INTEGRATED CIRCUIT (34335) 351-1529-040 A1A1U22	1	
97	SN74LS174N	2	INTEGRATED CIRCUIT (34335) 351-1529-040 A1A1U23	1	
98	CK05BX103K	2	CAPACITOR,FXD CER DIEL, 0.01UF, PCRM10%, 100V (81349) 913-5019-200 A1A1C9	1	
99	SN74LS174N	2	INTEGRATED CIRCUIT (34335) 351-1529-040 A1A1U25	1	
100	SN74LS174N	2	INTEGRATED CIRCUIT (34335) 351-1529-040 A1A1U26	1	
101	NST97N	2	INTEGRATED CIRCUIT (18324) 351-1267-020 A1A1U27	1	
102	CK05BX103K	2	CAPACITOR,FXD CER DIEL, 0.01UF, PCRM10%, 100V (81349) 913-5019-200 A1A1C10	1	
103	N74LS32N	2	INTEGRATED CIRCUIT LOGIC GATE (18324) 351-1523-260 A1A1U55	1	
104	CK05BX103K	2	CAPACITOR,FXD CER DIEL, 0.01UF, PCRM10%, 100V (81349) 913-5019-200 A1A1C15	1	
105	RCR05G102KS	2	RESISTOR,FXD CMPSN, 1K, 10%, 1/8W (81349) 745-2341-000 A1A1R6	1	
106	SN7406N	2	INTEGRATED CIRCUIT (01295) 351-7632-010 A1A1U54	1	
107	DM7447AN	2	INTEGRATED CIRCUIT (27014) 351-7544-020 A1A1U53	1	
108	CK05BX103K	2	CAPACITOR,FXD CER DIEL, 0.01UF, PCRM10%, 100V (81349) 913-5019-200 A1A1C14	1	
109	RCR05G102KS	2	RESISTOR,FXD CMPSN, 1K, 10%, 1/8W (81349) 745-2341-000 A1A1R5	1	
110	SN7406N	2	INTEGRATED CIRCUIT (01295) 351-7632-010 A1A1U52	1	
111	DM7447AN	2	INTEGRATED CIRCUIT (27014) 351-7544-020 A1A1U51	1	
112	DM7447AN	2	INTEGRATED CIRCUIT (27014) 351-7544-020 A1A1U50	1	
113	RCR05G102KS	2	RESISTOR,FXD CMPSN, 1K, 10%, 1/8W (81349) 745-2341-000 A1A1R4	1	
114	SN7406N	2	INTEGRATED CIRCUIT (01295) 351-7632-010 A1A1U49	1	
115	DM74LS02N	2	INTEGRATED CIRCUIT LOGIC GATE (27014) 351-1523-220 A1A1U48	1	
116	SN74LS138N	2	INTEGRATED CIRCUIT (04713) 351-1526-030 A1A1U47	1	
117	DM7447AN	2	INTEGRATED CIRCUIT (27014) 351-7544-020 A1A1U46	1	
118	CK05BX103K	2	CAPACITOR,FXD CER DIEL, 0.01UF, PCRM10%, 100V (81349) 913-5019-200 A1A1C13	1	
119	SN7406N	2	INTEGRATED CIRCUIT (01295) 351-7632-010 A1A1U45	1	
120	DM7447AN	2	INTEGRATED CIRCUIT (27014) 351-7544-020 A1A1U44	1	
121	RCR05G102KS	2	RESISTOR,FXD CMPSN, 1K, 10%, 1/8W (81349) 745-2341-000 A1A1R3	1	
122	DM7447AN	2	INTEGRATED CIRCUIT (27014) 351-7544-020 A1A1U43	1	
123	RCR05G102KS	2	RESISTOR,FXD CMPSN, 1K, 10%, 1/8W (81349) 745-2341-000 A1A1R2	1	
124	SN7406N	2	INTEGRATED CIRCUIT (01295) 351-7632-010 A1A1U42	1	
125	DM7447AN	2	INTEGRATED CIRCUIT (27014) 351-7544-020 A1A1U41	1	
126	DM7447AN	2	INTEGRATED CIRCUIT (27014) 351-7544-020 A1A1U40	1	
127	CK05BX103K	2	CAPACITOR,FXD CER DIEL, 0.01UF, PCRM10%, 100V (81349) 913-5019-200 A1A1C12	1	
128	SN7406N	2	INTEGRATED CIRCUIT (01295) 351-7632-010 A1A1U39	1	
129	DM7447AN	2	INTEGRATED CIRCUIT (27014) 351-7544-020 A1A1U38	1	
130	SN7406N	2	INTEGRATED CIRCUIT (01295) 351-7632-010 A1A1U37	1	
131	SN7406N	2	INTEGRATED CIRCUIT (01295) 351-7632-010 A1A1U36	1	
132	DM7447AN	2	INTEGRATED CIRCUIT (27014) 351-7544-020 A1A1U35	1	
133	SN7406N	2	INTEGRATED CIRCUIT (01295) 351-7632-010 A1A1U34	1	
134	DM7447AN	2	INTEGRATED CIRCUIT (27014) 351-7544-020 A1A1U33	1	
135	SN7406N	2	INTEGRATED CIRCUIT (01295) 351-7632-010 A1A1U32	1	
136	DM7447AN	2	INTEGRATED CIRCUIT (27014) 351-7544-020 A1A1U31	1	

GROUP ASSEMBLY PARTS LIST

FIG-ITEM	PART NO	INDENT	DESCRIPTION	UNITS PER ASSY	USABLE ON CODE
3-137	DM7447AN	2	INTEGRATED CIRCUIT (27014) 351-7544-020 A1A1U30	1	
138	CK05BX103K	2	CAPACITOR,FXD CER DIEL, 0.01UF, PORM10%, 100V (81349) 913-5019-200 A1A1C11	1	
139	RCR05G102KS	2	RESISTOR,FXD CMPSN, 1K, 10%, 1/8W (81349) 745-2341-000 A1A1R1	1	
140	DM7447AN	2	INTEGRATED CIRCUIT (27014) 351-7544-020 A1A1U29	1	
141	CK05BX103K	2	CAPACITOR,FXD CER DIEL, 0.01UF, PORM10%, 100V (81349) 913-5019-200 A1A1C2	1	
142	M39003-01-2257	2	CAPACITOR,FXD ELCTLT, 33UF, 10%, 10V (81349) 184-9086-170 A1A1C1	1	
143	DM74LS10N	2	INTEGRATED CIRCUIT LOGIC GATE (27014) 351-1523-230 A1A1U28	1	
144	768-3177-004	2	POST	3	
	P313-0132-000	2	NUT,PLAIN,HEX SST, 4-40 (77250) 313-0132-000 (AP)	3	
145	372-2601-045	2	CONTACT,ELEC	190	
146	768-5919-003	2	PIN, INDEX	2	
147	778-9422-023	2	SPACER, SLEEVE	8	

GROUP ASSEMBLY PARTS LIST

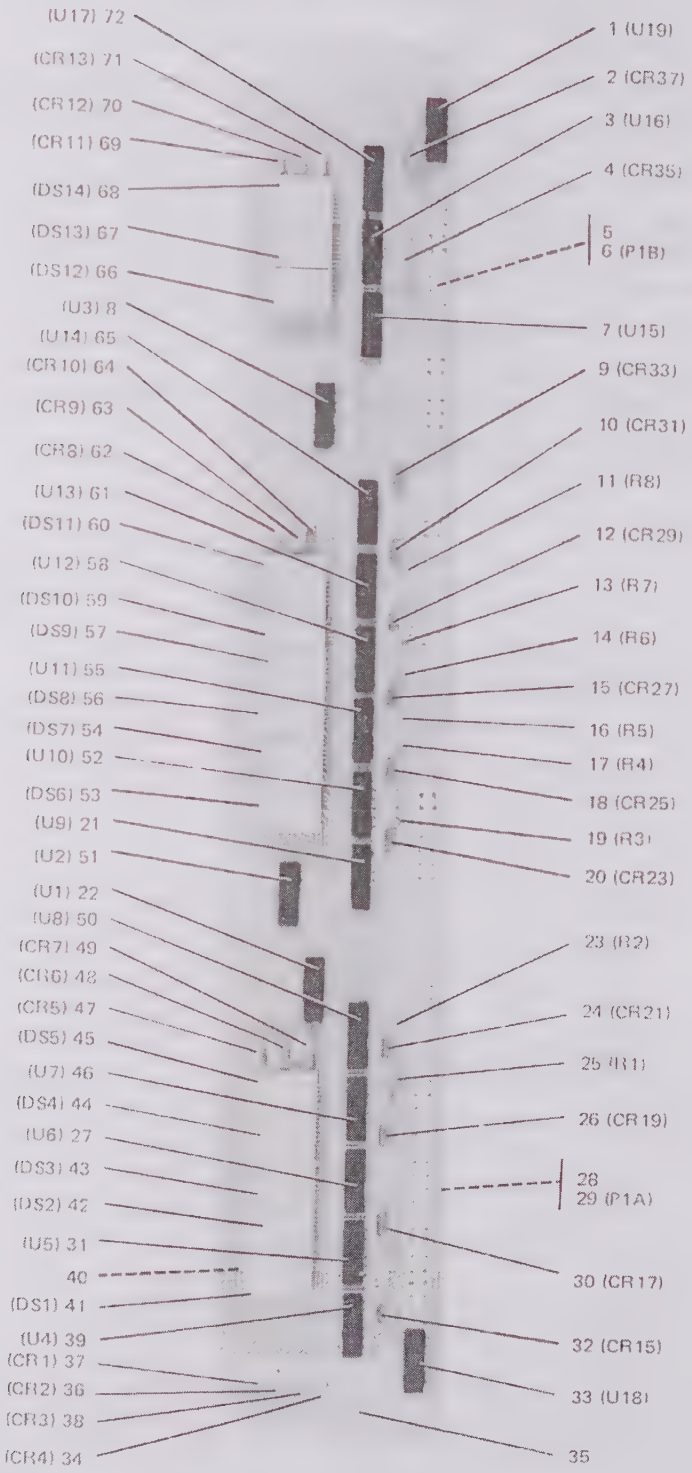

TP5-5376-017

Display Board Assembly A1A2
Figure 4

GROUP ASSEMBLY PARTS LIST

FIG-ITEM	PART NO	INDENT	DESCRIPTION	UNITS PER ASSY	USABLE ON CODE
4-	601-4913-002	1	DISPLAY BOARD ASSEMBLY A1A2 (SEE FIG 2-55 FOR NHA)	REF	
1	314B151	2	RESISTOR NTWK DUAL-IN-LINE, 150 OHMS, 2%, 125V (01121) 350-4027-010 A1A2U19	1	
2	5082-4670	2	LAMP,LED (28480) 353-0311-010 A1A2CR37	1	
3	314B151	2	RESISTOR NTWK DUAL-IN-LINE, 150 OHMS, 2%, 125V (01121) 350-4027-010 A1A2U16	1	
4	5082-4670	2	LAMP,LED (28480) 353-0311-010 A1A2CR35	1	
5	372-2252-010	2	CONTACT,ELEC	74	
6	372-2624-047	2	HOUSING,CONN A1A2P1B	1	
7	314B151	2	RESISTOR NTWK DUAL-IN-LINE, 150 OHMS, 2%, 125V (01121) 350-4027-010 A1A2U15	1	
8	314B151	2	RESISTOR NTWK DUAL-IN-LINE, 150 OHMS, 2%, 125V (01121) 350-4027-010 A1A2U3	1	
9	5082-4670	2	LAMP,LED (28480) 353-0311-010 A1A2CR33	1	
10	5082-4670	2	LAMP,LED (28480) 353-0311-010 A1A2CR31	1	
11	RCR05G151KS	2	RESISTOR,FXD CMPSN, 150 OHMS, 10%, 1/8W (81349) 745-2311-000 A1A2R8	1	
12	5082-4670	2	LAMP,LED (28480) 353-0311-010 A1A2CR29	1	
13	RCR05G151KS	2	RESISTOR,FXD CMPSN, 150 OHMS, 10%, 1/8W (81349) 745-2311-000 A1A2R7	1	
14	RCR05G151KS	2	RESISTOR,FXD CMPSN, 150 OHMS, 10%, 1/8W (81349) 745-2311-000 A1A2R6	1	
15	5082-4670	2	LAMP,LED (28480) 353-0311-010 A1A2CR27	1	
16	RCR05G151KS	2	RESISTOR,FXD CMPSN, 150 OHMS, 10%, 1/8W (81349) 745-2311-000 A1A2R5	1	
17	RCR05G151KS	2	RESISTOR,FXD CMPSN, 150 OHMS, 10%, 1/8W (81349) 745-2311-000 A1A2R4	1	
18	5082-4670	2	LAMP,LED (28480) 353-0311-010 A1A2CR25	1	
19	RCR05G151KS	2	RESISTOR,FXD CMPSN, 150 OHMS, 10%, 1/8W (81349) 745-2311-000 A1A2R3	1	
20	5082-4670	2	LAMP,LED (28480) 353-0311-010 A1A2CR23	1	
21	314B151	2	RESISTOR NTWK DUAL-IN-LINE, 150 OHMS, 2%, 125V (01121) 350-4027-010 A1A2U9	1	
22	314B151	2	RESISTOR NTWK DUAL-IN-LINE, 150 OHMS, 2%, 125V (01121) 350-4027-010 A1A2U1	1	
23	RCR05G151KS	2	RESISTOR,FXD CMPSN, 150 OHMS, 10%, 1/8W (81349) 745-2311-000 A1A2R2	1	
24	5082-4670	2	LAMP,LED (28480) 353-0311-010 A1A2CR21	1	
25	RCR05G151KS	2	RESISTOR,FXD CMPSN, 150 OHMS, 10%, 1/8W (81349) 745-2311-000 A1A2R1	1	
26	5082-4670	2	LAMP,LED (28480) 353-0311-010 A1A2CR19	1	
27	314B151	2	RESISTOR NTWK DUAL-IN-LINE, 150 OHMS, 2%, 125V (01121) 350-4027-010 A1A2U6	1	
28	372-2252-010	2	CONTACT,ELEC	84	
29	372-2624-052	2	HOUSING,CONN A1A2P1A	1	
30	5082-4670	2	LAMP,LED (28480) 353-0311-010 A1A2CR17	1	
31	314B151	2	RESISTOR NTWK DUAL-IN-LINE, 150 OHMS, 2%, 125V (01121) 350-4027-010 A1A2U5	1	
32	5082-4670	2	LAMP,LED (28480) 353-0311-010 A1A2CR15	1	
33	314B151	2	RESISTOR NTWK DUAL-IN-LINE, 150 OHMS, 2%, 125V (01121) 350-4027-010 A1A2U18	1	
34	5082-4670	2	LAMP,LED (28480) 353-0311-010 A1A2CR4	1	
35	778-9422-001	2	SLEEVE, SPACER	3	
36	5082-4670	2	LAMP,LED (28480) 353-0311-010 A1A2CR2	1	
37	5082-4670	2	LAMP,LED (28480) 353-0311-010 A1A2CR1	1	
38	5082-4670	2	LAMP,LED (28480) 353-0311-010 A1A2CR3	1	
39	314B151	2	RESISTOR NTWK DUAL-IN-LINE, 150 OHMS, 2%, 125V (01121) 350-4027-010 A1A2U4	1	
40	TSW3800-14BW	2	SOCKET,IC (23980) 220-0075-020 A1A2XDS1 A1A2XDS10 A1A2XDS11 A1A2XDS12 A1A2XDS13 A1A2XDS14 A1A2XDS2 A1A2XDS3 A1A2XDS4 A1A2XDS5 A1A2XDS6 A1A2XDS7 A1A2XDS8 A1A2XDS9	14	
41	5082-7650	2	LED DISPLAY (28480) 262-1463-010 A1A2DS1	1	

GROUP ASSEMBLY PARTS LIST

FIG-ITEM	PART NO	INDENT	DESCRIPTION	UNITS PER ASSY	USABLE ON CODE
4-42	5082-7650	2	LED DISPLAY (28480) 262-1463-010 A1A2DS2	1	
43	5082-7650	2	LED DISPLAY (28480) 262-1463-010 A1A2DS3	1	
44	5082-7650	2	LED DISPLAY (28480) 262-1463-010 A1A2DS4	1	
45	5082-7650	2	LED DISPLAY (28480) 262-1463-010 A1A2DS5	1	
46	314B151	2	RESISTOR NTWK DUAL-IN-LINE, 150 OHMS, 2%, 125V (01121) 350-4027-010 A1A2U7	1	
47	5082-4670	2	LAMP,LED (28480) 353-0311-010 A1A2CR5	1	
48	5082-4670	2	LAMP,LED (28480) 353-0311-010 A1A2CR6	1	
49	5082-4670	2	LAMP,LED (28480) 353-0311-010 A1A2CR7	1	
50	314B151	2	RESISTOR NTWK DUAL-IN-LINE, 150 OHMS, 2%, 125V (01121) 350-4027-010 A1A2U8	1	
51	314B151	2	RESISTOR NTWK DUAL-IN-LINE, 150 OHMS, 2%, 125V (01121) 350-4027-010 A1A2U9	1	
52	314B151	2	RESISTOR NTWK DUAL-IN-LINE, 150 OHMS, 2%, 125V (01121) 350-4027-010 A1A2U10	1	
53	5082-7650	2	LED DISPLAY (28480) 262-1463-010 A1A2DS6	1	
54	5082-7650	2	LED DISPLAY (28480) 262-1463-010 A1A2DS7	1	
55	314B151	2	RESISTOR NTWK DUAL-IN-LINE, 150 OHMS, 2%, 125V (01121) 350-4027-010 A1A2U11	1	
56	5082-7650	2	LED DISPLAY (28480) 262-1463-010 A1A2DS8	1	
57	5082-7650	2	LED DISPLAY (28480) 262-1463-010 A1A2DS9	1	
58	314B151	2	RESISTOR NTWK DUAL-IN-LINE, 150 OHMS, 2%, 125V (01121) 350-4027-010 A1A2U12	1	
59	5082-7650	2	LED DISPLAY (28480) 262-1463-010 A1A2DS10	1	
60	5082-7650	2	LED DISPLAY (28480) 262-1463-010 A1A2DS11	1	
61	314B151	2	RESISTOR NTWK DUAL-IN-LINE, 150 OHMS, 2%, 125V (01121) 350-4027-010 A1A2U13	1	
62	5082-4670	2	LAMP,LED (28480) 353-0311-010 A1A2CR8	1	
63	5082-4670	2	LAMP,LED (28480) 353-0311-010 A1A2CR9	1	
64	5082-4670	2	LAMP,LED (28480) 353-0311-010 A1A2CR10	1	
65	314B151	2	RESISTOR NTWK DUAL-IN-LINE, 150 OHMS, 2%, 125V (01121) 350-4027-010 A1A2U14	1	
66	5082-7650	2	LED DISPLAY (28480) 262-1463-010 A1A2DS12	1	
67	5082-7650	2	LED DISPLAY (28480) 262-1463-010 A1A2DS13	1	
68	5082-7650	2	LED DISPLAY (28480) 262-1463-010 A1A2DS14	1	
69	5082-4670	2	LAMP,LED (28480) 353-0311-010 A1A2CR11	1	
70	5082-4670	2	LAMP,LED (28480) 353-0311-010 A1A2CR12	1	
71	5082-4670	2	LAMP,LED (28480) 353-0311-010 A1A2CR13	1	
72	314B151	2	RESISTOR NTWK DUAL-IN-LINE, 150 OHMS, 2%, 125V (01121) 350-4027-010 A1A2U17	1	

GROUP ASSEMBLY PARTS LIST

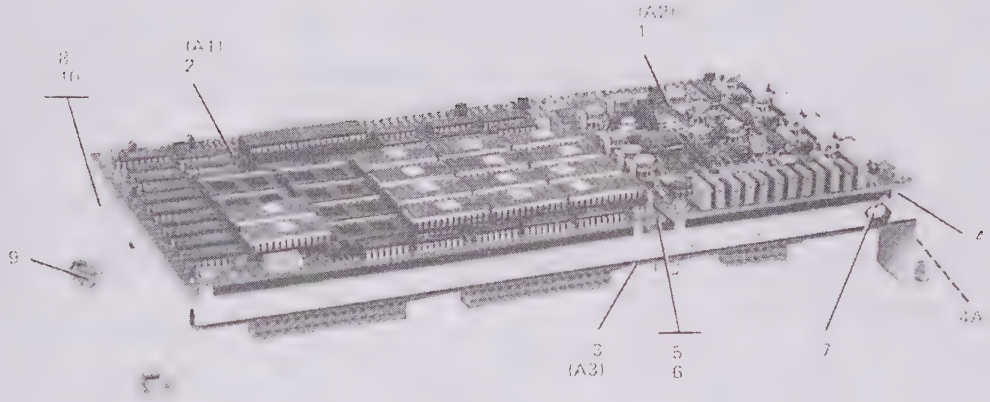

TP5-5348-017

Controller/Audio Assembly A2
Figure 5

FIG-ITEM	PART NO	INDENT	DESCRIPTION	UNITS PER ASSY	USABLE ON CODE
5-	629-9740-002	1	CONTROLLER/AUDIO ASSY (ESDS) A2 (SEE FIG 1-16 FOR NHA)	REF	
1	601-4911-001	2	ANALOG BOARD (ESDS) A2A2 (SEE FIG 7)	1	
	MS51957-13	2	SCREW,MACH STL, 4-40 X 1/4 (96906) 343-0133-000 (AP)	2	
	MS35338-135	2	WASHER,LOCK SST, 0.115 ID X 0.209 OD (96906) 310-0279-000 (AP)	2	
	MS15795-803	2	WASHER,FLAT CRES, 0.125ID X 0.250 OD (96906) 310-0779-030 (AP)	2	
2	638-2470-001	2	CPU ASSEMBLY (ESDS) A2A1 (SEE FIG 6)	1	
	MS51957-13	2	SCREW,MACH STL, 4-40 X 1/4 (96906) 343-0133-000 (AP)	4	
	MS35338-135	2	WASHER,LOCK SST, 0.115 ID X 0.209 OD (96906) 310-0279-000 (AP)	4	
	MS15795-803	2	WASHER,FLAT CRES, 0.125ID X 0.250 OD (96906) 310-0779-030 (AP)	4	
3	601-4883-001	2	TDM BOARD ASSEMBLY (ESDS) A2A3 (SEE FIG 8)	1	
	330-1716-030	2	SCREW,SLFLKG SST, 2-56 X 1/4 (56878) (AP)	6	
4	540-9033-003	2	POST	6	
4A	280-2745-010	2	LABEL,PRESS SENS (12998) (EFF REV LTR G)	1	
5	638-2230-001	2	DIVIDER,SHIELD	1	

GROUP ASSEMBLY PARTS LIST

FIG-ITEM	PART NO	INDENT	DESCRIPTION	UNITS PER ASSY	USABLE ON CODE
6	540-9031-003	2	POST	2	
	6BNM40	2	NUT,SLFLKG,HEX AL, 4-40 (72962) 333-0347-000 (AP FOR 5-6)	2	
	MS35338-135	2	WASHER,LOCK SST, 0.115 ID X 0.209 OD (96906) 310-0279-000 (AP FOR 5-6)(EFF TO REV LTR F)	2	
	MS15795-803	2	WASHER,FLAT CRES, 0.125ID X 0.250 OD (96906) 310-0779-030 (AP FOR 5-6)	2	
	MS51957-18	2	SCREW,MACH STL, 4-40 X 5/8 (96906) 343-0138-000 (AP FOR 5-6)	2	
7	768-3177-004	2	POST	6	
8	629-9749-001	2	BRACKET ASSEMBLY	1	
9	5R2-1	3	RECEPTACLE,TURN (71286) 010-2786-000	4	
	MS20426AD3-3	3	RIVET,SOLID AL, 3/32 DIA X 3/16 (96906) 305-1361-000 (AP)	8	
10	629-9749-002	3	BRACKET	1	

GROUP ASSEMBLY PARTS LIST

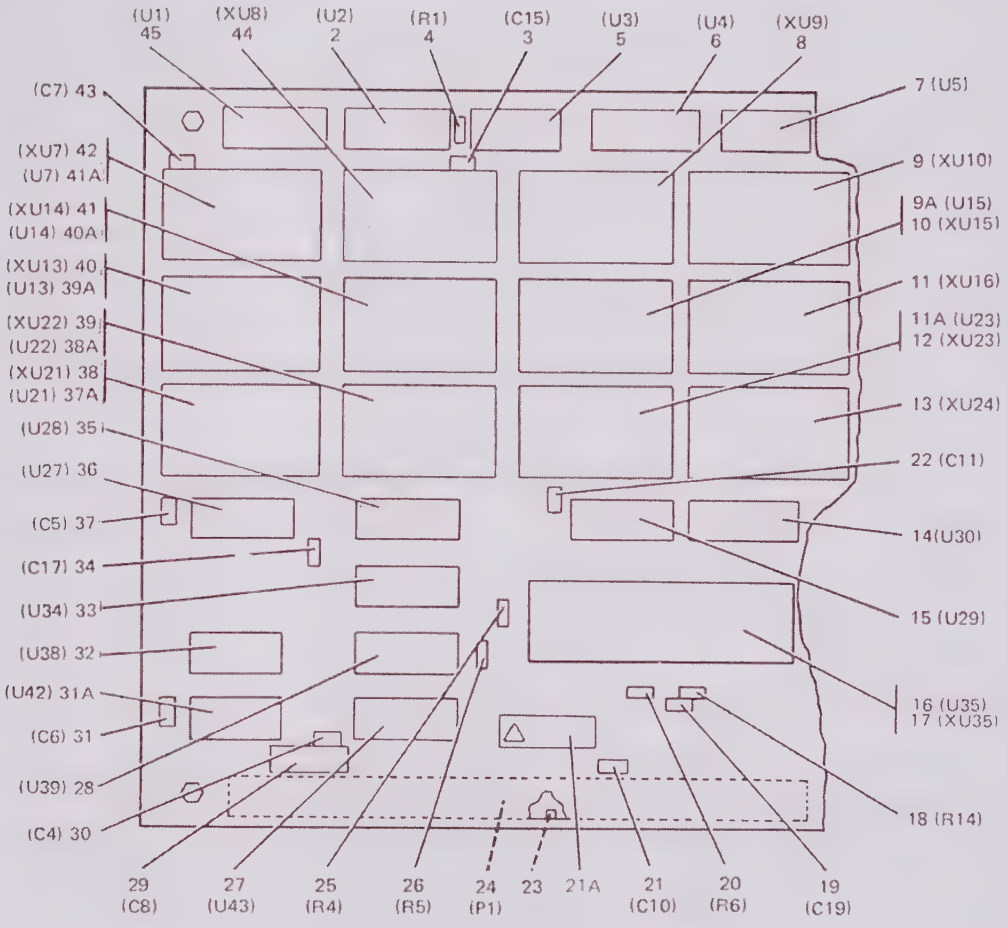

TP5-5494-029

CPU Assembly A2A1
Figure 6 (Sheet 1 of 2)

GROUP ASSEMBLY PARTS LIST

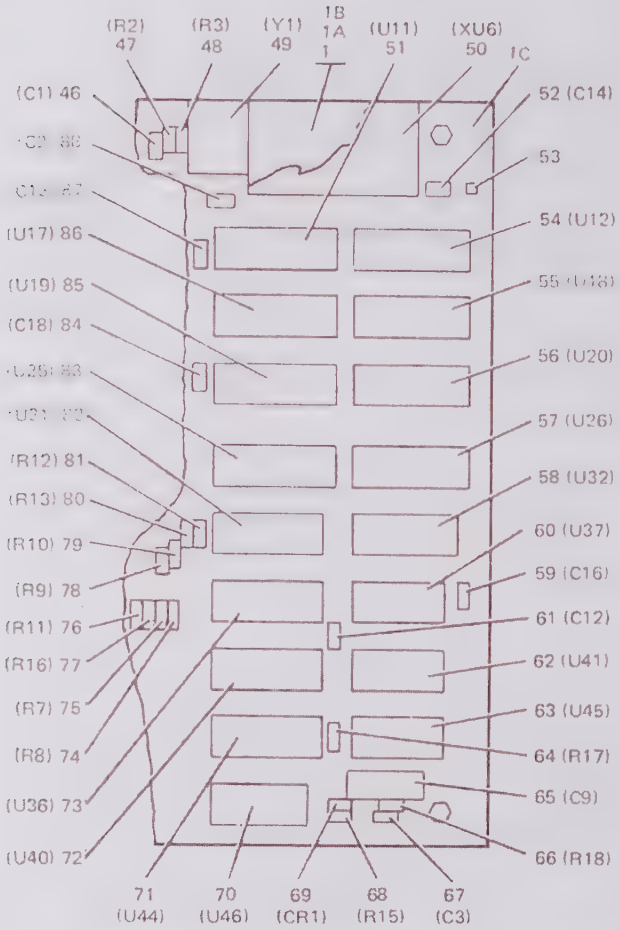

TP5-5494-029

CPU Assembly A2A1
Figure 6 (Sheet 2)

GROUP ASSEMBLY PARTS LIST

FIG-ITEM	PART NO	INDENT	DESCRIPTION	UNITS PER ASSY	USABLE ON CODE
6-	638-2470-001	1	CPU ASSEMBLY (ESDS) A2A1 (SEE FIG 5-2 FOR NHA)	REF	
1	638-2480-001	2	PLATE ASSEMBLY STATUS (EFF REV LTR B)	1	
1A	638-2481-001	3	PLATE STATUS	1	
1B	TSW3800-24BW	3	SOCKET,IC (23880) 220-0075-050	1	
1C	601-2099-001	2	CPU ASSEMBLY A2A1	1	
2	4040BPC	3	INTEGRATED CIRCUIT (ESDS) (07263) 351-8159-240 A2A1U2	1	
3	CK05BX104K	3	CAPACITOR,FXD CER DIEL, 0.1UF, PORM10%, 50V (81349) 913-5019-320 A2A1C15	1	
4	RCR05G102KS	3	RESISTOR,FXD CMPSN, 1K, 10%, 1/8W (81349) 745-2341-000 A2A1R1	1	
5	SN74LS74AN	3	INTEGRATED CIRCUIT FLIP FLOP (04713) 351-1525-040 A2A1U3	1	
6	SN74LS191N	3	INTEGRATED CIRCUIT (ESDS) (34335) 351-1527-030 A2A1U4	1	
7	MC7404P	3	INTEGRATED CIRCUIT (04713) 351-7630-010 A2A1U5	1	
8	TSW3800-24BW	3	SOCKET,IC (23880) 220-0075-050 A2A1XU9	1	
9	TSW3800-24BW	3	SOCKET,IC (23880) 220-0075-050 A2A1XU10	1	
9A	638-2476-001	2	INTEGRATED CKT, MODIFIED A2A1U15 (EFF TO REV LTR C)	1	
9A	638-2476-002	2	INTEGRATED CKT, MODIFIED A2A1U15 (EFF REV LTR C TO REV LTR F)	1	
9A	638-2476-003	2	INTEGRATED CKT, MODIFIED A2A1U15 (EFF REV LTR F TO REV LTR H) (SB2)	1	
9A	638-2476-004	2	INTEGRATED CKT, MODIFIED A2A1U15 (EFF REV LTR H TO REV LTR J)	1	
9A	638-2476-005	2	INTEGRATED CKT, MODIFIED A2A1U15 (EFF REV LTR J) (SB10)	1	
10	TSW3800-24BW	3	SOCKET,IC (23880) 220-0075-050 A2A1XU15	1	
11	TSW3800-24BW	3	SOCKET,IC (23880) 220-0075-050 A2A1XU16	1	
11A	638-2473-001	2	INTEGRATED CKT, MODIFIED A2A1U23 (EFF TO REV LTR C)	1	
11A	638-2473-002	2	INTEGRATED CKT, MODIFIED A2A1U23 (EFF REV LTR C TO REV LTR F)	1	
11A	638-2473-003	2	INTEGRATED CKT, MODIFIED A2A1U23 (EFF REV LTR F TO REV LTR J) (SB2)	1	
11A	638-2473-004	2	INTEGRATED CKT, MODIFIED A2A1U23 (EFF REV LTR J) (SB10)	1	
12	TSW3800-24BW	3	SOCKET,IC (23880) 220-0075-050 A2A1XU23	1	
13	TSW3800-24BW	3	SOCKET,IC (23880) 220-0075-050 A2A1XU24	1	
14	N8T97N	3	INTEGRATED CIRCUIT (18324) 351-1267-020 A2A1U30	1	
15	N8T97N	3	INTEGRATED CIRCUIT (18324) 351-1267-020 A2A1U29	1	
16	Z80	3	MICROCIRCUIT (ESDS) (A1656) 351-8453-010 A2A1U35	1	
17	D1LBZ40P1	3	SOCKET,INT CKT (09922) 220-0044-010 A2A1XU35	1	
18	RCR05G102KS	3	RESISTOR,FXD CMPSN, 1K, 10%, 1/8W (81349) 745-2341-000 A2A1R14	1	
19	CK05BX104K	3	CAPACITOR,FXD CER DIEL, 0.1UF, PORM10%, 50V (81349) 913-5019-320 A2A1C19	1	
20	RCR05G102KS	3	RESISTOR,FXD CMPSN, 1K, 10%, 1/8W (81349) 745-2341-000 A2A1R6	1	
21	CK05BX104K	3	CAPACITOR,FXD CER DIEL, 0.1UF, PORM10%, 50V (81349) 913-5019-320 A2A1C10	1	
21A	280-2745-010	3	LABEL,PRESS SENS (12998) (EFF REV LTR C)	1	
22	CK05BX104K	3	CAPACITOR,FXD CER DIEL, 0.1UF, PORM10%, 50V (81349) 913-5019-320 A2A1C11	1	
23	372-3392-016	3	CONTACT,ELEC	57	
24	372-2624-038	3	HOUSING,CONN A2A1P1	1	
25	RCR05G391KS	3	RESISTOR,FXD CMPSN, 390 OHMS, 10%, 1/8W (81349) 745-2326-000 A2A1R4	1	
26	RCR05G102KS	3	RESISTOR,FXD CMPSN, 1K, 10%, 1/8W (81349) 745-2341-000 A2A1R5	1	
27	N8T97N	3	INTEGRATED CIRCUIT (18324) 351-1267-020 A2A1U43	1	
28	N8T97N	3	INTEGRATED CIRCUIT (18324) 351-1267-020 A2A1U39	1	
29	M39003-01-2289	3	CAPACITOR,FXD ELCTLT, 15UF, 10%, 20V (81349) 184-9086-490 A2A1C8	1	
30	CK05BX104K	3	CAPACITOR,FXD CER DIEL, 0.1UF, PORM10%, 50V (81349) 913-5019-320 A2A1C4	1	

GROUP ASSEMBLY PARTS LIST

FIG-ITEM	PART NO	INDENT	DESCRIPTION	UNITS PER ASSY	USABLE ON CODE
6-31	CK05BX104K	3	CAPACITOR,FXD CER DIEL, 0.1UF, PERM10%, 50V (81349) 913-5019-320 A2A1C6	1	
31A	N74LS32N	3	INTEGRATED CIRCUIT LOGIC GATE (18324) 351-1523-260 A2A1U42	1	
32	N74LS00N	3	INTEGRATED CIRCUIT LOGIC GATE (18324) 351-1523-110 A2A1U38	1	
33	N8T97N	3	INTEGRATED CIRCUIT (18324) 351-1267-020 A2A1U34	1	
34	CK05BX104K	3	CAPACITOR,FXD CER DIEL, 0.1UF, PERM10%, 50V (81349) 913-5019-320 A2A1C17	1	
35	N8T97N	3	INTEGRATED CIRCUIT (18324) 351-1267-020 A2A1U28	1	
36	SN74LS138N	3	INTEGRATED CIRCUIT (04713) 351-1526-030 A2A1U27	1	
37	CK05BX104K	3	CAPACITOR,FXD CER DIEL, 0.1UF, PERM10%, 50V (81349) 913-5019-320 A2A1C5	1	
37A	638-2471-001	2	INTEGRATED CKT, MODIFIED A2A1U21 (EFF TO REV LTR C)	1	
37A	638-2471-002	2	INTEGRATED CKT, MODIFIED A2A1U21 (EFF REV LTR C TO REV LTR E)	1	
37A	638-2471-003	2	INTEGRATED CKT, MODIFIED A2A1U21 (EFF REV LTR E TO REV LTR F)	1	
37A	638-2471-004	2	INTEGRATED CKT, MODIFIED A2A1U21 (EFF REV LTR F TO REV LTR G)	1	
37A	638-2471-005	2	INTEGRATED CKT, MODIFIED A2A1U21 (EFF REV LTR G TO REV LTR H) (SB2)	1	
37A	638-2471-006	2	INTEGRATED CKT, MODIFIED A2A1U21 (EFF REV LTR H TO REV LTR J)	1	
37A	638-2471-007	2	INTEGRATED CKT, MODIFIED A2A1U21 (EFF REV LTR J) (SB10)	1	
38	TSW3800-24BW	3	SOCKET,IC (23880) 220-0075-050 A2A1XU21	1	
38A	638-2472-001	2	INTEGRATED CKT, MODIFIED A2A1U22 (EFF TO REV LTR C)	1	
38A	638-2472-002	2	INTEGRATED CKT, MODIFIED A2A1U22 (EFF REV LTR C TO REV LTR F)	1	
38A	638-2472-003	2	INTEGRATED CKT, MODIFIED A2A1U22 (EFF REV LTR F TO REV LTR J) (SB2)	1	
38A	638-2472-004	2	INTEGRATED CKT, MODIFIED A2A1U22 (EFF REV LTR J) (SB10)	1	
39	TSW3800-24BW	3	SOCKET,IC (23880) 220-0075-050 A2A1XU22	1	
39A	638-2474-001	2	INTEGRATED CKT, MODIFIED A2A1U13 (EFF TO REV LTR C)	1	
39A	638-2474-002	2	INTEGRATED CKT, MODIFIED A2A1U13 (EFF REV LTR C TO REV LTR D)	1	
39A	638-2474-003	2	INTEGRATED CKT, MODIFIED A2A1U13 (EFF REV LTR D TO REV LTR E)	1	
39A	638-2474-004	2	INTEGRATED CKT, MODIFIED A2A1U13 (EFF REV LTR E TO REV LTR F)	1	
39A	638-2474-005	2	INTEGRATED CKT, MODIFIED A2A1U13 (EFF REV LTR F TO REV LTR H) (SB2)	1	
39A	638-2474-006	2	INTEGRATED CKT, MODIFIED A2A1U13 (EFF REV LTR H TO REV LTR J)	1	
39A	638-2474-007	2	INTEGRATED CKT, MODIFIED A2A1U13 (EFF REV LTR J) (SB10)	1	
40	TSW3800-24BW	3	SOCKET,IC (23880) 220-0075-050 A2A1XU13	1	
40A	638-2475-001	2	INTEGRATED CKT, MODIFIED A2A1U14 (EFF TO REV LTR C)	1	
40A	638-2475-002	2	INTEGRATED CKT, MODIFIED A2A1U14 (EFF REV LTR C TO REV LTR F)	1	
40A	638-2475-003	2	INTEGRATED CKT, MODIFIED A2A1U14 (EFF REV LTR F TO REV LTR J) (SB2)	1	
40A	638-2475-004	2	INTEGRATED CKT, MODIFIED A2A1U14 (EFF REV LTR J) (SB10)	1	
41	TSW3800-24BW	3	SOCKET,IC (23880) 220-0075-050 A2A1XU14	1	
41A	638-2477-001	2	INTEGRATED CKT, MODIFIED A2A1U7 (EFF TO REV LTR C)	1	
41A	638-2477-002	2	INTEGRATED CKT, MODIFIED A2A1U7 (EFF REV LTR C TO REV LTR D)	1	
41A	638-2477-003	2	INTEGRATED CKT, MODIFIED A2A1U7 (EFF REV LTR D TO REV LTR E)	1	

GROUP ASSEMBLY PARTS LIST

FIG-ITEM	PART NO	INDENT	DESCRIPTION	UNITS PER ASSY	USABLE ON CODE
6-41A	638-2477-004	2	INTEGRATED CKT, MODIFIED A2A1U7 (EFF REV LTR E TO REV LTR F)	1	
41A	638-2477-005	2	INTEGRATED CKT, MODIFIED A2A1U7 (EFF REV LTR F TO REV LTR H) (SB2)	1	
41A	638-2477-006	2	INTEGRATED CKT, MODIFIED A2A1U7 (EFF REV LTR H TO REV LTR J)	1	
41A	638-2477-007	2	INTEGRATED CKT, MODIFIED A2A1U7 (EFF REV LTR J) (SB10)	1	
42	TSW3800-24BW	3	SOCKET,IC (23880) 220-0075-050 A2A1XU7	1	
43	CK05BX104K	3	CAPACITOR,FXD CER DIEL, 0.1UF, PORM10%, 50V (81349) 913-5019-320 A2A1C7	1	
44	TSW3800-24BW	3	SOCKET,IC (23880) 220-0075-050 A2A1XU8	1	
45	F4049BPC	3	INTEGRATED CIRCUIT (ESDS) (07263) 351-8159-210 A2A1U1	1	
46	CK05BX103K	3	CAPACITOR,FXD CER DIEL, 0.01UF, PORM10%, 100V (81349) 913-5019-200 A2A1C1	1	
47	RCR05G471KS	3	RESISTOR,FXD CMPSN, 470 OHMS, 10%, 1/8W (81349) 745-2329-000 A2A1R2	1	
48	RCR05G471KS	3	RESISTOR,FXD CMPSN, 470 OHMS, 10%, 1/8W (81349) 745-2329-000 A2A1R3	1	
49	CR64AU16-0000MHZ	3	CRYSTAL UNIT,QTZ 16.00000MHZ (81349) 289-7082-010 A2A1Y1	1	
50	TSW3800-24BW	3	SOCKET,IC (23880) 220-0075-050 A2A1XU6	1	
51	AM9111BPC	3	INTEGRATED CIRCUIT (ESDS) (34335) 351-8410-020 A2A1U11	1	
52	CK05BX104K	3	CAPACITOR,FXD CER DIEL, 0.1UF, PORM10%, 50V (81349) 913-5019-320 A2A1C14	1	
53	372-2601-045	3	CONTACT,ELEC	25	
54	AM9111BPC	3	INTEGRATED CIRCUIT (ESDS) (34335) 351-8410-020 A2A1U12	1	
55	AM9111BPC	3	INTEGRATED CIRCUIT (ESDS) (34335) 351-8410-020 A2A1U18	1	
56	AM9111BPC	3	INTEGRATED CIRCUIT (ESDS) (34335) 351-8410-020 A2A1U20	1	
57	AM9111BPC	3	INTEGRATED CIRCUIT (ESDS) (34335) 351-8410-020 A2A1U26	1	
58	N8T97N	3	INTEGRATED CIRCUIT (18324) 351-1267-020 A2A1U32	1	
59	CK05BX104K	3	CAPACITOR,FXD CER DIEL, 0.1UF, PORM10%, 50V (81349) 913-5019-320 A2A1C16	1	
60	N74LS32N	3	INTEGRATED CIRCUIT LOGIC GATE (18324) 351-1523-260 A2A1U37	1	
61	CK05BX104K	3	CAPACITOR,FXD CER DIEL, 0.1UF, PORM10%, 50V (81349) 913-5019-320 A2A1C12	1	
62	N74LS04N	3	INTEGRATED CIRCUIT LOGIC GATE (18324) 351-1523-090 A2A1U41	1	
63	SN74LS74AN	3	INTEGRATED CIRCUIT FLIP FLOP (04713) 351-1525-040 A2A1U45	1	
64	RCR05G102KS	3	RESISTOR,FXD CMPSN, 1K, 10%, 1/8W (81349) 745-2341-000 A2A1R17	1	
65	M39003-01-2289	3	CAPACITOR,FXD ELCTLT, 15UF, 10%, 20V (81349) 184-9086-490 A2A1C9	1	
66	RCR05G102KS	3	RESISTOR,FXD CMPSN, 1K, 10%, 1/8W (81349) 745-2341-000 A2A1R18	1	
67	CK05BX104K	3	CAPACITOR,FXD CER DIEL, 0.1UF, PORM10%, 50V (81349) 913-5019-320 A2A1C3	1	
68	RCR05G104KS	3	RESISTOR,FXD CMPSN, 100K, 10%, 1/8W (81349) 745-2413-000 A2A1R15	1	
69	1N4454GE	3	SEMICOND DEVICE (03508) 353-3644-010 A2A1CR1	1	
70	N74LS32N	3	INTEGRATED CIRCUIT LOGIC GATE (18324) 351-1523-260 A2A1U46	1	
71	N8T97N	3	INTEGRATED CIRCUIT (18324) 351-1267-020 A2A1U44	1	
72	N8T97N	3	INTEGRATED CIRCUIT (18324) 351-1267-020 A2A1U40	1	
73	SN74LS139N	3	INTEGRATED CIRCUIT (04713) 351-1526-040 A2A1U36	1	

GROUP ASSEMBLY PARTS LIST

FIG-ITEM	PART NO	INDENT	DESCRIPTION	UNITS PER ASSY	USABLE ON CODE
6-74	RCR05G102KS	3	RESISTOR,FXD CMPSN, 1K, 10%, 1/8W (81349) 745-2341-000 A2A1R8	1	
75	RCR05G102KS	3	RESISTOR,FXD CMPSN, 1K, 10%, 1/8W (81349) 745-2341-000 A2A1R7	1	
76	RCR05G102KS	3	RESISTOR,FXD CMPSN, 1K, 10%, 1/8W (81349) 745-2341-000 A2A1R11	1	
77	RCR05G102KS	3	RESISTOR,FXD CMPSN, 1K, 10%, 1/8W (81349) 745-2341-000 A2A1R16	1	
78	RCR05G102KS	3	RESISTOR,FXD CMPSN, 1K, 10%, 1/8W (81349) 745-2341-000 A2A1R9	1	
79	RCR05G102KS	3	RESISTOR,FXD CMPSN, 1K, 10%, 1/8W (81349) 745-2341-000 A2A1R10	1	
80	RCR05G102KS	3	RESISTOR,FXD CMPSN, 1K, 10%, 1/8W (81349) 745-2341-000 A2A1R13	1	
81	RCR05G102KS	3	RESISTOR,FXD CMPSN, 1K, 10%, 1/8W (81349) 745-2341-000 A2A1R12	1	
82	NOT USED	3	INTEGRATED CIRCUIT (18324) 351-1267-020 A2A1U31	1	
83	AM9111BPC	3	INTEGRATED CIRCUIT (ESDS) (34335) 351-8410-020 A2A1U25	1	
84	CK05BX104K	3	CAPACITOR,FXD CER DIEL, 0.1UF, PORM10%, 50V (81349) 913-5019-320 A2A1C18	1	
85	AM9111BPC	3	INTEGRATED CIRCUIT (ESDS) (34335) 351-8410-020 A2A1U19	1	
86	AM9111BPC	3	INTEGRATED CIRCUIT (ESDS) (34335) 351-8410-020 A2A1U17	1	
87	CK05BX104K	3	CAPACITOR,FXD CER DIEL, 0.1UF, PORM10%, 50V (81349) 913-5019-320 A2A1C13	1	
88	CK05BX270K	3	CAPACITOR,FXD CER DIEL, 27PF, PORM10%, 200V (81349) 913-5019-060 A2A1C2	1	

GROUP ASSEMBLY PARTS LIST

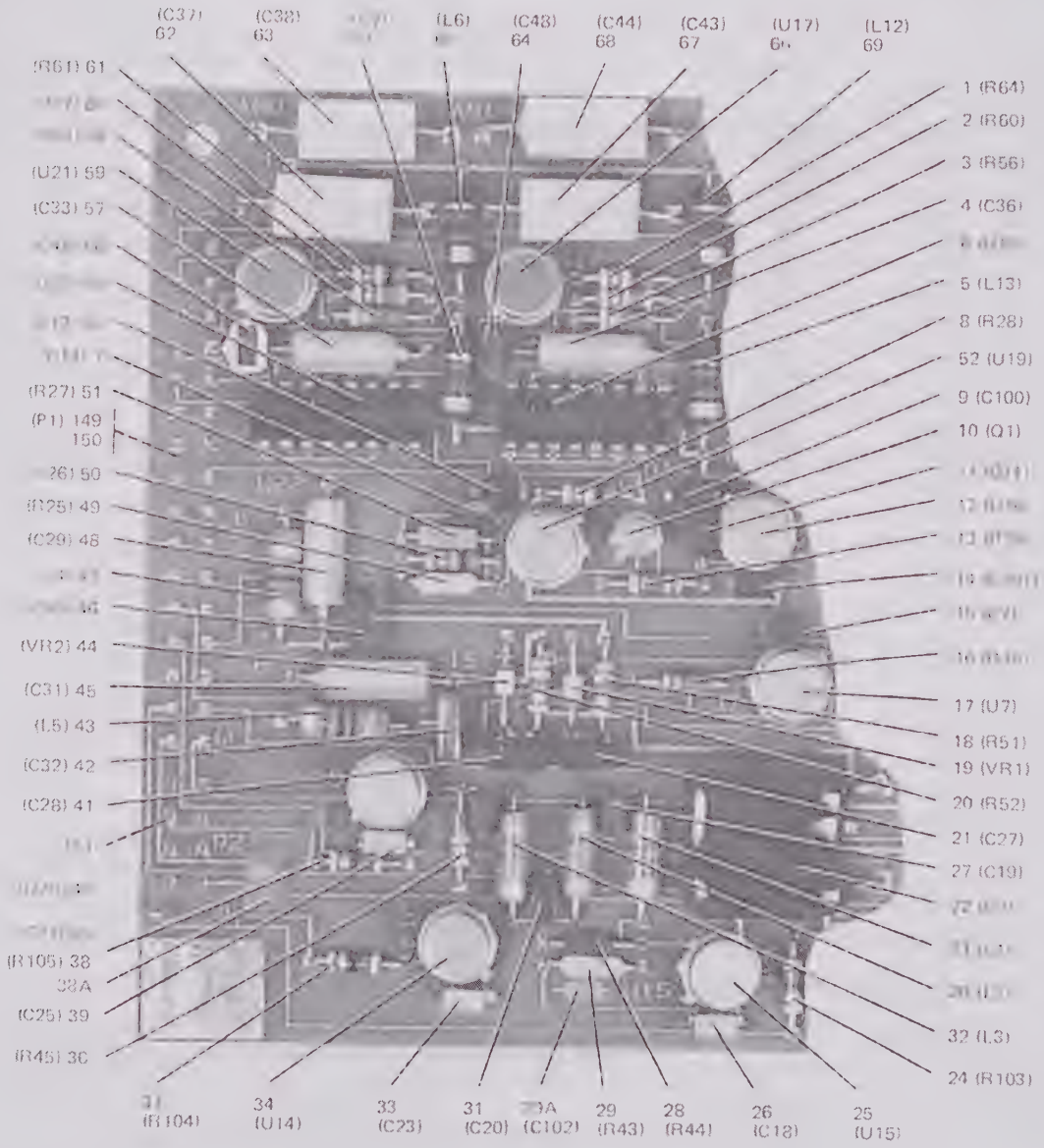

TP5-5389-027

Analog Board A2A2
Figure 7 (Sheet 1 of 2)

GROUP ASSEMBLY PARTS LIST

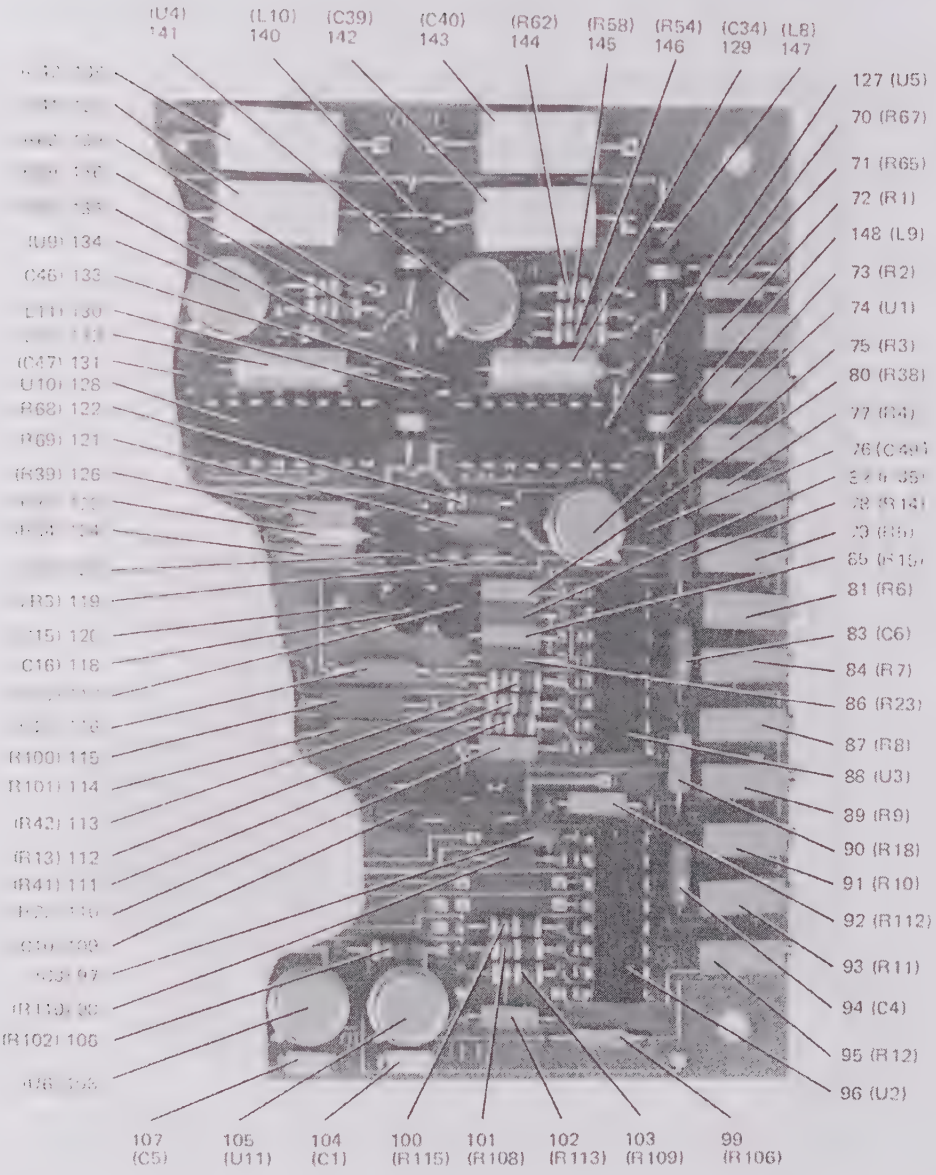

TP5-5389-027

Analog Board A2A2
Figure 7 (Sheet 2)

GROUP ASSEMBLY PARTS LIST

FIG-ITEM	PART NO	INDENT	DESCRIPTION	UNITS PER ASSY	USABLE ON CODE
7-	601-4911-001	1	ANALOG BOARD (ESDS) A2A2 (SEE FIG 5-1 FOR NHA)	REF	
1	RCR07G104KS	2	RESISTOR,FXD CMPSN, 0.10MEGO, 10%, 1/4W (81349) 745-0821-000 A2A2R64	1	
2	RCR07G473KS	2	RESISTOR,FXD CMPSN, 47K, 10%, 1/4W (81349) 745-0809-000 A2A2R60	1	
3	RCR07G152KS	2	RESISTOR,FXD CMPSN, 1.5K, 10%, 1/4W (81349) 745-0755-000 A2A2R56	1	
4	M39003-01-2286	2	CAPACITOR,FXD ELCTLT, 10UF, 10%, 20V (81349) 184-9086-460 A2A2C36	1	
5	MS75089-11	2	COIL,RF 100UH (96906) 240-2715-370 A2A2L13	1	
6	F40498PC	2	INTEGRATED CIRCUIT (ESDS) (07263) 351-8159-210 A2A2U18	1	
7	CK05BX101K	2	CAPACITOR,FXD CER DIEL, 100PF, 10%, 200V (81349) 913-4006-000 A2A2C13	1	
8	RCR07G104KS	2	RESISTOR,FXD CMPSN, 0.10MEGO, 10%, 1/4W (81349) 745-0821-000 A2A2R28	1	
9	CK05BX102K	2	CAPACITOR,FXD CER DIEL, 1000PF, 10%, 200V (81349) 913-4018-000 A2A2C100	1	
10	2N4416	2	TRANSISTOR (ESDS) (17856) 352-0756-010 A2A2Q1	1	
11	CK05BX102K	2	CAPACITOR,FXD CER DIEL, 1000PF, 10%, 200V (81349) 913-4018-000 A2A2C11	1	
12	LM318H	2	INTEGRATED CIRCUIT (34335) 351-1153-010 A2A2U16	1	
13	RCR07G331KS	2	RESISTOR,FXD CMPSN, 330 OHMS, 10%, 1/4W (81349) 745-0731-000 A2A2R29	1	
14	CK05BX102K	2	CAPACITOR,FXD CER DIEL, 1000PF, 10%, 200V (81349) 913-4018-000 A2A2C101	1	
15	CK05BX101K	2	CAPACITOR,FXD CER DIEL, 100PF, 10%, 200V (81349) 913-4006-000 A2A2C7	1	
16	RCR07G272KS	2	RESISTOR,FXD CMPSN, 2.7K, 10%, 1/4W (81349) 745-0764-000 A2A2R16	1	
17	LM101AH	2	INTEGRATED CIRCUIT (27014) 351-1040-020 A2A2U7	1	
18	RCR07G391KS	2	RESISTOR,FXD CMPSN, 390 OHMS, 10%, 1/4W (81349) 745-0734-000 A2A2R51	1	
19	1N752A	2	SEMICOND DEVICE (12954) 353-2712-000 A2A2VR1	1	
20	RCR07G391KS	2	RESISTOR,FXD CMPSN, 390 OHMS, 10%, 1/4W (81349) 745-0734-000 A2A2R52	1	
21	CK06BX104K	2	CAPACITOR,FXD CER DIEL, 0.1UF, PORM10%, 100V (81349) 913-5019-440 A2A2C27	1	
22	CM07FD103J03	2	CAPACITOR,FXD MICA DIEL, 10000PF, 5%, 500V (81349) 912-2735-000 A2A2C9	1	
23	MS75089-12	2	COIL,RF 120UH (96906) 240-2715-380 A2A2L1	1	
24	RCR07G470KS	2	RESISTOR,FXD CMPSN, 47 OHMS, 10%, 1/4W (81349) 745-0701-000 A2A2R103	1	
25	LM101AH	2	INTEGRATED CIRCUIT (27014) 351-1040-020 A2A2U15	1	
26	CK05BX150K	2	CAPACITOR,FXD CER DIEL, 15PF, PORM10%, 200V (81349) 913-5019-030 A2A2C18 (EFF TO REV LTR G)	1	
26	CK05BX270K	2	CAPACITOR,FXD CER DIEL, 27PF, PORM10%, 200V (81349) 913-5019-060 A2A2C18 (EFF REV LTR G)	1	
27	CK05BX102K	2	CAPACITOR,FXD CER DIEL, 1000PF, 10%, 200V (81349) 913-4018-000 A2A2C19	1	
28	RN55D3320F	2	RESISTOR,FXD FILM, 332 OHMS, 1%, 1/8W (81349) 705-0973-000 A2A2R44	1	
29	RN55E5112B	2	RESISTOR,FXD FILM, 51.1K, 0.1%, 1/10W (81349) 705-5976-840 A2A2R43	1	
29A	CK05BX560K	2	CAPACITOR,FXD CER DIEL, 56PF, 10%, 200V (81349) 913-4003-000 A2A2C102 (EFF REV LTR H TO REV LTR J)	1	
29A	CK05BX470K	2	CAPACITOR,FXD CER DIEL, 47PF, 10%, 200V (81349) 913-4002-000 A2A2C102 (EFF REV LTR J)	1	
30	MS75089-20	2	COIL,RF 560UH (96906) 240-2715-460 A2A2L2	1	
31	CK05BX222K	2	CAPACITOR,FXD CER DIEL, 2200PF, PORM10%, 100V (81349) 913-5019-120 A2A2C20	1	
32	MS75089-22	2	COIL,RF 820UH (96906) 240-2715-480 A2A2L3	1	

GROUP ASSEMBLY PARTS LIST

FIG-ITEM	PART NO	INDENT	DESCRIPTION	UNITS PER ASSY	USABLE ON CODE
7-33	CK05BX150K	2	CAPACITOR,FXD CER DIEL, 15PF, PORM10%, 200V (81349) 913-5019-030 A2A2C23	1	
34	LM101AH	2	INTEGRATED CIRCUIT (27014) 351-1040-020 A2A2U14	1	
35	CK05BX222K	2	CAPACITOR,FXD CER DIEL, 2200PF, PORM10%, 100V (81349) 913-5019-120 A2A2C21	1	
36	RCR07G223KS	2	RESISTOR,FXD CMPSN, 22K, 10%, 1/4W (81349) 745-0797-000 A2A2R45 (EFF TO REV LTR K)	1	
36	RCR07G102KS	2	RESISTOR,FXD CMPSN, 1K, 10%, 1/4W (81349) 745-0749-000 A2A2R45 (EFF REV LTR K)	1	
37	RCR07G470KS	2	RESISTOR,FXD CMPSN, 47 OHMS, 10%, 1/4W (81349) 745-0701-000 A2A2R104	1	
38	RCR07G470KS	2	RESISTOR,FXD CMPSN, 47 OHMS, 10%, 1/4W (81349) 745-0701-000 A2A2R105	1	
38A	2E0-2745-010	2	LABEL,PRESS SENS (12998) (EFF REV LTR L)	1	
39	CK05BX150K	2	CAPACITOR,FXD CER DIEL, 15PF, PORM10%, 200V (81349) 913-5019-030 A2A2C25	1	
40	LM101AH	2	INTEGRATED CIRCUIT (27014) 351-1040-020 A2A2U20	1	
41	CK06BX104K	2	CAPACITOR,FXD CER DIEL, 0.1UF, PORM10%, 100V (81349) 913-5019-440 A2A2C28	1	
42	CK06BX104K	2	CAPACITOR,FXD CER DIEL, 0.1UF, PORM10%, 100V (81349) 913-5019-440 A2A2C32	1	
43	MS75089-13	2	COIL,RF 10UH (96906) 240-2715-250 A2A2L5	1	
44	1N750A	2	SEMICOND DEVICE (12954) 353-2712-000 A2A2VR2	1	
45	M39003-01-2289	2	CAPACITOR,FXD ELCTLT, 15UF, 10%, 20V (81349) 184-9086-490 A2A2C31	1	
46	CK06BX104K	2	CAPACITOR,FXD CER DIEL, 0.1UF, PORM10%, 100V (81349) 913-5019-440 A2A2C30	1	
47	MS75089-13	2	COIL,RF 10UH (96906) 240-2715-250 A2A2L4	1	
48	M39003-01-2289	2	CAPACITOR,FXD ELCTLT, 15UF, 10%, 20V (81349) 184-9086-490 A2A2C29	1	
49	RN55E5491B	2	RESISTOR,FXD FILM, 5.49K, 0.1%, 1/10W (81349) 705-5974-960 A2A2R25	1	
50	RCR07G103KS	2	RESISTOR,FXD CMPSN, 10K, 10%, 1/4W (81349) 745-0765-000 A2A2R26	1	
51	RN55D1212F	2	RESISTOR,FXD FILM, 12.1K, 1%, 1/8W (81349) 705-1048-000 A2A2R27	1	
52	LM318H	2	INTEGRATED CIRCUIT (34335) 351-1153-010 A2A2U19	1	
53	CK05BX332K	2	CAPACITOR,FXD CER DIEL, 3300PF, PORM10%, 100V (81349) 913-5019-140 A2A2C12	1	
54	F4049BPC	2	INTEGRATED CIRCUIT (ESDS) (07263) 351-8159-210 A2A2U22	1	
55	MS75089-11	2	COIL,RF 100UH (96906) 240-2715-370 A2A2L7	1	
56	CK05BX101K	2	CAPACITOR,FXD CER DIEL, 100PF, 10%, 200V (81349) 913-4006-000 A2A2C45	1	
57	M39003-01-2286	2	CAPACITOR,FXD ELCTLT, 10UF, 10%, 20V (81349) 184-9086-460 A2A2C33	1	
58	RCR07G152KS	2	RESISTOR,FXD CMPSN, 1.5K, 10%, 1/4W (81349) 745-0755-000 A2A2R53	1	
59	LM108H	2	INTEGRATED CIRCUIT (27014) 351-1079-020 A2A2U21	1	
60	RCR07G473KS	2	RESISTOR,FXD CMPSN, 47K, 10%, 1/4W (81349) 745-0809-000 A2A2R57	1	
61	RCR07G104KS	2	RESISTOR,FXD CMPSN, 0.10MEGO, 10%, 1/4W (81349) 745-0821-000 A2A2R61	1	
62	PE1S0-1-80-10	2	CAPACITOR,FXD PLSTC DIEL, 0.1UF, 10%, 80V (27735) 933-1039-230 A2A2C37	1	
63	PE1S0-1-80-10	2	CAPACITOR,FXD PLSTC DIEL, 0.1UF, 10%, 80V (27735) 933-1039-230 A2A2C38	1	
64	CK05BX101K	2	CAPACITOR,FXD CER DIEL, 100PF, 10%, 200V (81349) 913-4006-000 A2A2C48	1	
65	MS75089-11	2	COIL,RF 100UH (96906) 240-2715-370 A2A2L6	1	
66	LM108H	2	INTEGRATED CIRCUIT (27014) 351-1079-020 A2A2U17	1	
67	PE1S0-1-80-10	2	CAPACITOR,FXD PLSTC DIEL, 0.1UF, 10%, 80V (27735) 933-1039-230 A2A2C43	1	

GROUP ASSEMBLY PARTS LIST

FIG-ITEM	PART NO	INDENT	DESCRIPTION	UNITS PER ASSY	USABLE ON CODE
7-68	PE1S0-1-80-10	2	CAPACITOR,FXD PLSTC DIEL, 0.1UF, 10%, 80V (27735) 933-1039-230 A2A2C44	1	
69	MS75089-11	2	COIL,RF 100UH (96906) 240-2715-370 A2A2L12	1	
70	RN55E3831B	2	RESISTOR,FXD FILM, 3.83K, 0.1%, 1/10W (81349) 705-5974-660 A2A2R67	1	
71	RN55E4641B	2	RESISTOR,FXD FILM, 4.64K, 0.1%, 1/10W (81349) 705-5974-820 A2A2R65	1	
72	RT24C2X102	2	RESISTOR,VAR 1K, 5%, 3/4W (81349) 381-1853-270 A2A2R1	1	
73	RT24C2X102	2	RESISTOR,VAR 1K, 5%, 3/4W (81349) 381-1853-270 A2A2R2	1	
74	LM101AH	2	INTEGRATED CIRCUIT (27014) 351-1040-020 A2A2U1	1	
75	RT24C2X502	2	RESISTOR,VAR 5K, 5%, 3/4W (81349) 381-1853-290 A2A2R3	1	
76	CK05BX101K	2	CAPACITOR,FXD CER DIEL, 100PF, 10%, 200V (81349) 913-4006-000 A2A2C49	1	
77	RT24C2X502	2	RESISTOR,VAR 5K, 5%, 3/4W (81349) 381-1853-290 A2A2R4	1	
78	RN55E1542B	2	RESISTOR,FXD FILM, 15.4K, 0.1%, 1/10W (81349) 705-5975-830 A2A2R14	1	
79	RT24C2X103	2	RESISTOR,VAR 10K, 5%, 3/4W (81349) 381-1853-300 A2A2R5	1	
80	RN55E7872B	2	RESISTOR,FXD FILM, 78.7K, 0.1%, 1/10W (81349) 705-5977-210 A2A2R38	1	
81	RT24C2X502	2	RESISTOR,VAR 5K, 5%, 3/4W (81349) 381-1853-290 A2A2R6	1	
82	RN55E6812B	2	RESISTOR,FXD FILM, 68.1K, 0.1%, 1/10W (81349) 705-5977-090 A2A2R35	1	
83	8141M100C0G682J	2	CAPACITOR,FXD CER DIEL, 6800PF, PORM5%, 100V (18796) 913-3281-390 A2A2C6	1	
84	RT24C2X502	2	RESISTOR,VAR 5K, 5%, 3/4W (81349) 381-1853-290 A2A2R7	1	
85	RN55E1002B	2	RESISTOR,FXD FILM, 10K, 0.1%, 1/10W (81349) 705-5975-470 A2A2R15	1	
86	RN55E6812B	2	RESISTOR,FXD FILM, 68.1K, 0.1%, 1/10W (81349) 705-5977-090 A2A2R23	1	
87	RT24C2X502	2	RESISTOR,VAR 5K, 5%, 3/4W (81349) 381-1853-290 A2A2R8	1	
88	CD4053BE	2	INTEGRATED CIRCUIT (ESDS) (02735) 351-8236-020 A2A2U3	1	
89	RT24C2X103	2	RESISTOR,VAR 10K, 5%, 3/4W (81349) 381-1853-300 A2A2R9	1	
90	RN55E1543B	2	RESISTOR,FXD FILM, 154K, 0.1%, 1/10W (81349) 705-5977-770 A2A2R18	1	
91	RT24C2X502	2	RESISTOR,VAR 5K, 5%, 3/4W (81349) 381-1853-290 A2A2R10	1	
92	RN55E2432B	2	RESISTOR,FXD FILM, 24.3K, 0.1%, 1/10W (81349) 705-5976-220 A2A2R112	1	
93	RT24C2X502	2	RESISTOR,VAR 5K, 5%, 3/4W (81349) 381-1853-290 A2A2R11	1	
94	8141M100C0G682J	2	CAPACITOR,FXD CER DIEL, 6800PF, PORM5%, 100V (18796) 913-3281-390 A2A2C4	1	
95	RT24C2X502	2	RESISTOR,VAR 5K, 5%, 3/4W (81349) 381-1853-290 A2A2R12	1	
96	CD4053BE	2	INTEGRATED CIRCUIT (ESDS) (02735) 351-8236-020 A2A2U2	1	
97	2CC0G681X5100C4	2	CAPACITOR,FXD CER DIEL, 0.00068UF, 5%, 100V (56289) 913-3117-090 A2A2C3	1	
98	RN55E2552B	2	RESISTOR,FXD FILM, 25.5K, 0.1%, 1/10W (81349) 705-5976-260 A2A2R110	1	
99	RN55D7870F	2	RESISTOR,FXD FILM, 787 OHMS, 1%, 1/8W (81349) 705-0991-000 A2A2R106	1	
100	RCR07G474KS	2	RESISTOR,FXD CMPSN, 0.47MEGO, 10%, 1/4W (81349) 745-0845-000 A2A2R115	1	
101	RCR07G474KS	2	RESISTOR,FXD CMPSN, 0.47MEGO, 10%, 1/4W (81349) 745-0845-000 A2A2R108	1	
102	RN55E1402B	2	RESISTOR,FXD FILM, 14K, 0.1%, 1/10W (81349) 705-5975-750 A2A2R113	1	
103	RCR07G474KS	2	RESISTOR,FXD CMPSN, 0.47MEGO, 10%, 1/4W (81349) 745-0845-000 A2A2R109	1	
104	CK05BX330K	2	CAPACITOR,FXD CER DIEL, 33PF, PORM10%, 200V (81349) 913-5019-070 A2A2C1	1	

GROUP ASSEMBLY PARTS LIST

FIG-ITEM	PART NO	INDENT	DESCRIPTION	UNITS PER ASSY	USABLE ON CODE
7-105	LM101AH	2	INTEGRATED CIRCUIT (27014) 351-1040-020 A2A2U11	1	
106	RCR07G152KS	2	RESISTOR,FXD CMPSN, 1.5K, 10%, 1/4W (81349) 745-0755-000 A2A2R102	1	
107	CK05BX150K	2	CAPACITOR,FXD CER DIEL, 15PF, PORM10%, 200V (81349) 913-5019-030 A2A2C5	1	
108	LM101AH	2	INTEGRATED CIRCUIT (27014) 351-1040-020 A2A2U6	1	
109	DM20FD222J04CR	2	CAPACITOR,FXD MICA DIEL, 2200PF, 5%, 500V (14655) 912-3339-000 A2A2C10	1	
110	RN55E1502B	2	RESISTOR,FXD FILM, 15K, 0.1%, 1/10W (81349) 705-5975-810 A2A2R22	1	
111	RCR07G474KS	2	RESISTOR,FXD CMPSN, 0.47MEGO, 10%, 1/4W (81349) 745-0845-000 A2A2R41	1	
112	RCR07G474KS	2	RESISTOR,FXD CMPSN, 0.47MEGO, 10%, 1/4W (81349) 745-0845-000 A2A2R13	1	
113	RCR07G474KS	2	RESISTOR,FXD CMPSN, 0.47MEGO, 10%, 1/4W (81349) 745-0845-000 A2A2R42	1	
114	RN60D8063F	2	RESISTOR,FXD FILM, 806K, 1%, 1/4W (81349) 705-3601-420 A2A2R101	1	
115	RN60D8063F	2	RESISTOR,FXD FILM, 806K, 1%, 1/4W (81349) 705-3601-420 A2A2R100	1	
116	RN55E1742B	2	RESISTOR,FXD FILM, 17.4K, 0.1%, 1/10W (81349) 705-5975-930 A2A2R20	1	
117	DM5F221J050WV	2	CAPACITOR,FXD MICA DIEL, 220PF, 5%, 50V (72136) 912-4141-450 A2A2C17	1	
118	DM5F401J050WV	2	CAPACITOR,FXD MICA DIEL, 400PF, 5%, 50V (72136) 912-4141-520 A2A2C16	1	
119	1N825A	2	SEMICOND DEVICE (12954) 353-3262-000 A2A2VR3	1	
120	1CC0X381X5100C4	2	CAPACITOR,FXD CER DIEL, 0.00033UF, 5%, 100V (56289) 913-3117-070 A2A2C15	1	
121	RN55D7500F	2	RESISTOR,FXD FILM, 750 OHMS, 1%, 1/8W (81349) 705-0990-000 A2A2R69	1	
122	RCR07G222KS	2	RESISTOR,FXD CMPSN, 2.2K, 10%, 1/4W (81349) 745-0761-000 A2A2R68	1	
123	CK06BX104K	2	CAPACITOR,FXD CER DIEL, 0.1UF, PORM10%, 100V (81349) 913-5019-440 A2A2C50	1	
124	RN55E6042B	2	RESISTOR,FXD FILM, 60.4K, 0.1%, 1/10W (81349) 705-5976-930 A2A2R34	1	
125	RN55E4872B	2	RESISTOR,FXD FILM, 48.7K, 0.1%, 1/10W (81349) 705-5976-800 A2A2R33	1	
126	RN55E5362B	2	RESISTOR,FXD FILM, 53.6K, 0.1%, 1/10W (81349) 705-5976-880 A2A2R39	1	
127	F4049EFC	2	INTEGRATED CIRCUIT (ESDS) (07263) 351-8159-210 A2A2U5	1	
128	F4049BFC	2	INTEGRATED CIRCUIT (ESDS) (07263) 351-8159-210 A2A2U10	1	
129	M39003-01-2286	2	CAPACITOR,FXD ELCTLT, 10UF, 10%, 20V (81349) 184-9086-460 A2A2C34	1	
130	MS75089-11	2	COIL,RF 100UH (96906) 240-2715-370 A2A2L11	1	
131	CK05BX101K	2	CAPACITOR,FXD CER DIEL, 100PF, 10%, 200V (81349) 913-4006-000 A2A2C47	1	
132	M39003-01-2286	2	CAPACITOR,FXD ELCTLT, 10UF, 10%, 20V (81349) 184-9086-460 A2A2C35	1	
133	CK05BX101K	2	CAPACITOR,FXD CER DIEL, 100PF, 10%, 200V (81349) 913-4006-000 A2A2C46	1	
134	LM108H	2	INTEGRATED CIRCUIT (27014) 351-1079-020 A2A2U9	1	
135	RCR07G152KS	2	RESISTOR,FXD CMPSN, 1.5K, 10%, 1/4W (81349) 745-0755-000 A2A2R55	1	
136	RCR07G473KS	2	RESISTOR,FXD CMPSN, 47K, 10%, 1/4W (81349) 745-0809-000 A2A2R59	1	
137	PE1S0-1-80-10	2	CAPACITOR,FXD PLSTC DIEL, 0.1UF, 10%, 80V (27735) 933-1039-230 A2A2C41	1	
138	PE1S0-1-80-10	2	CAPACITOR,FXD PLSTC DIEL, 0.1UF, 10%, 80V (27735) 933-1039-230 A2A2C42	1	

GROUP ASSEMBLY PARTS LIST

FIG-ITEM	PART NO	INDENT	DESCRIPTION	UNITS PER ASSY	USABLE ON CODE
7-139	RCR07G104KS	2	RESISTOR,FXD CMPSN, 0.10MEGO, 10%, 1/4W (81349) 745-0821-000 A2A2R63	1	
140	MS75089-11	2	COIL,RF 100UH (96906) 240-2715-370 A2A2L10	1	
141	LM108H	2	INTEGRATED CIRCUIT (27014) 351-1079-020 A2A2U4	1	
142	PE1S0-1-80-10	2	CAPACITOR,FXD PLSTC DIEL, 0.1UF, 10%, 80V (27735) 933-1039-230 A2A2C39	1	
143	PE1S0-1-80-10	2	CAPACITOR,FXD PLSTC DIEL, 0.1UF, 10%, 80V (27735) 933-1039-230 A2A2C40	1	
144	RCR07G104KS	2	RESISTOR,FXD CMPSN, 0.10MEGO, 10%, 1/4W (81349) 745-0821-000 A2A2R62	1	
145	RCR07G473KS	2	RESISTOR,FXD CMPSN, 47K, 10%, 1/4W (81349) 745-0809-000 A2A2R58	1	
146	RCR07G472KS	2	RESISTOR,FXD CMPSN, 4.7K, 10%, 1/4W (81349) 745-0773-000 A2A2R54	1	
147	MS75089-11	2	COIL,RF 100UH (96906) 240-2715-370 A2A2L8	1	
148	MS75089-11	2	COIL,RF 100UH (96906) 240-2715-370 A2A2L9	1	
149	372-2624-025	2	HOUSING,CONN A2A2P1	1	
150	372-3398-011	2	CONTACT,ELEC	32	
151	372-2601-045	2	CONTACT,ELEC	9	

GROUP ASSEMBLY PARTS LIST

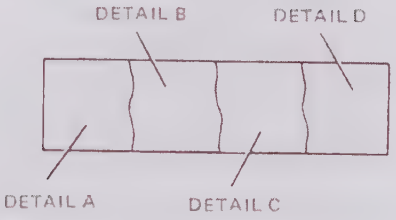

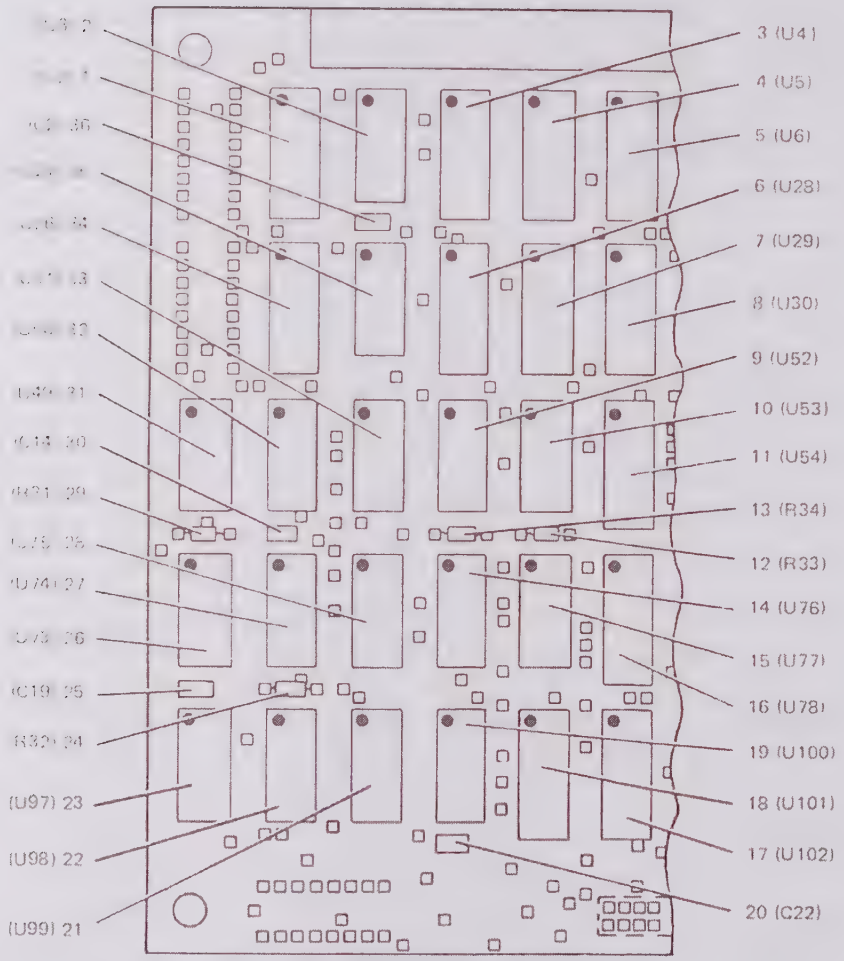

DETAIL A

TP5-5388-049

TDM Board A2A3
Figure 8 (Sheet 1 of 4)

GROUP ASSEMBLY PARTS LIST

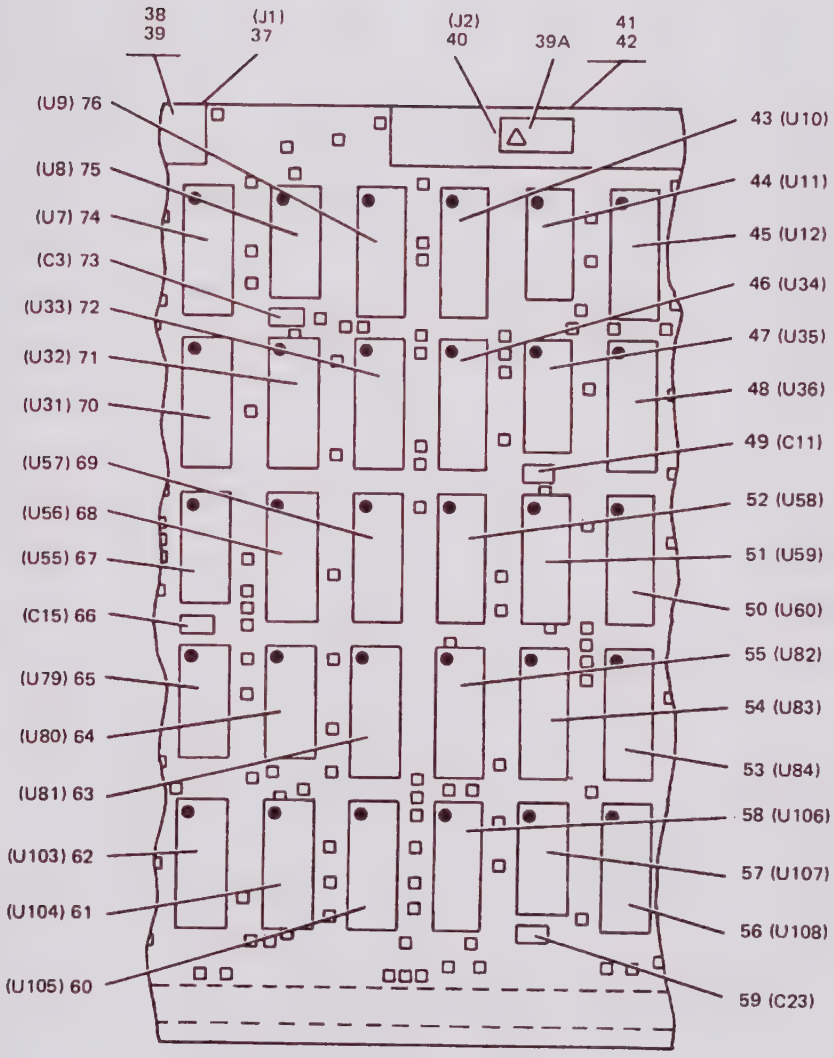

DETAIL B

ELECTROSTATIC SENSITIVE DEVICES OBSERVE PRECAUTIONS FOR HANDLING

TP5-5388-049

TDM Board A2A3
Figure 8 (Sheet 2)

GROUP ASSEMBLY PARTS LIST

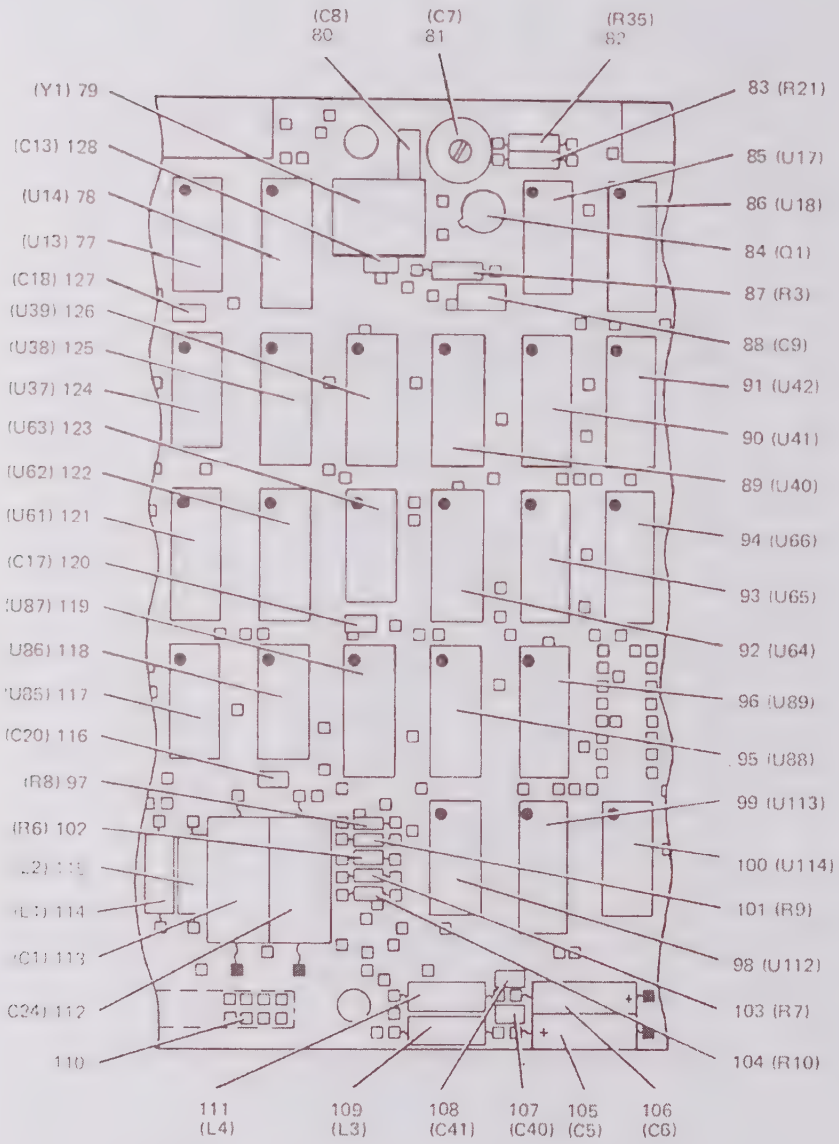

DETAIL C

TP5-5388-049

TDM Board A2A3
Figure 8 (Sheet 3)

GROUP ASSEMBLY PARTS LIST

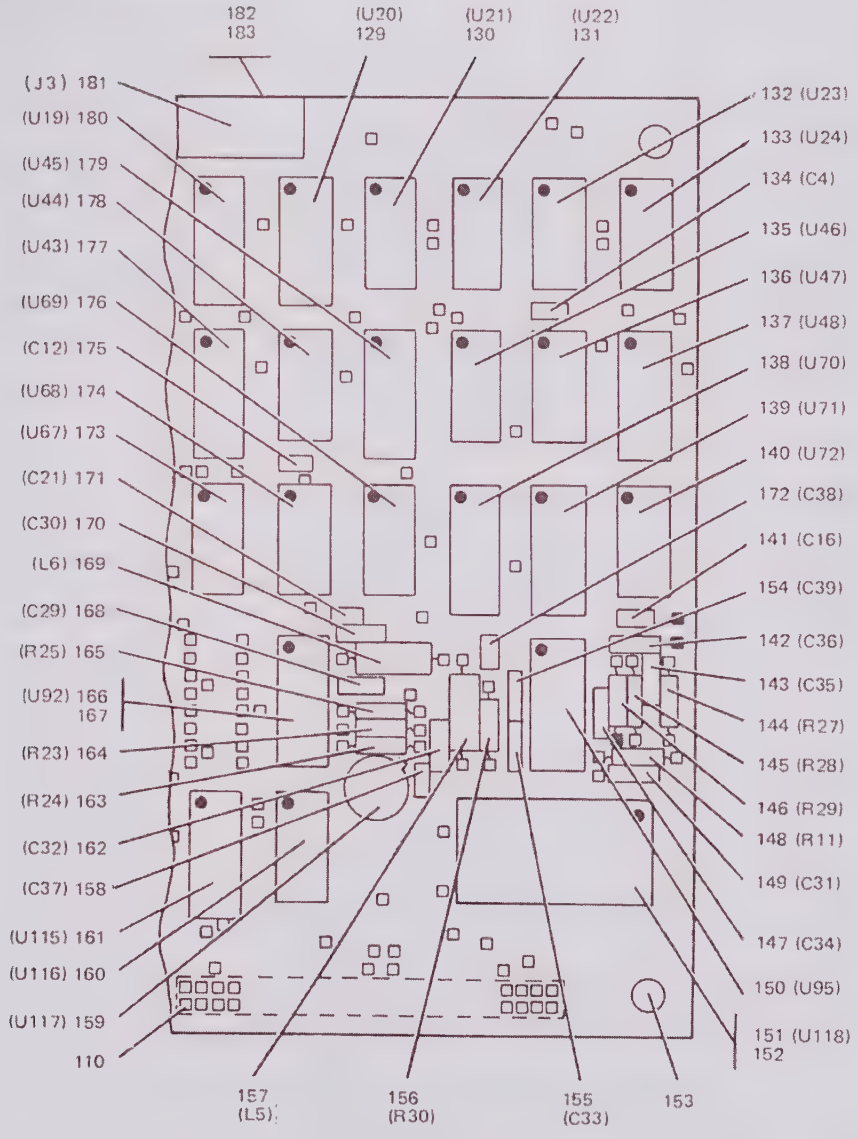

DETAIL D

TP5-5388-049

TDM Board A2A3
Figure 8 (Sheet 4)

GROUP ASSEMBLY PARTS LIST

FIG-ITEM	PART NO	INDENT	DESCRIPTION	UNITS PER ASSY	USABLE ON CODE
8-	601-4883-001	1	TDM BOARD ASSEMBLY (ESDS) A2A3 (SEE FIG 5-3 FOR NHA)	REF	
1	DM7489J	2	INTEGRATED CIRCUIT (27014) 351-7676-020 A2A3U2	1	
2	314A152	2	RESISTOR NTWK DUAL-IN-LINE, 1.5K, 2%, 125V (01121) 350-4027-130 A2A3U3	1	
3	SN7483AN	2	INTEGRATED CIRCUIT (01295) 351-7752-010 A2A3U4	1	
4	SN74LS175N	2	INTEGRATED CIRCUIT (34335) 351-1529-050 A2A3U5	1	
5	DM7489J	2	INTEGRATED CIRCUIT (27014) 351-7676-020 A2A3U6	1	
6	SN7483AN	2	INTEGRATED CIRCUIT (01295) 351-7752-010 A2A3U28	1	
7	SN74LS175N	2	INTEGRATED CIRCUIT (34335) 351-1529-050 A2A3U29	1	
8	DM7489J	2	INTEGRATED CIRCUIT (27014) 351-7676-020 A2A3U30	1	
9	SN74LS74AN	2	INTEGRATED CIRCUIT FLIP FLOP (04713) 351-1525-040 A2A3U52	1	
10	314A152	2	RESISTOR NTWK DUAL-IN-LINE, 1.5K, 2%, 125V (01121) 350-4027-130 A2A3U53	1	
11	DM7489J	2	INTEGRATED CIRCUIT (27014) 351-7676-020 A2A3U54	1	
12	RCR05G472KS	2	RESISTOR,FXD CMPSN, 4.7K, 10%, 1/8W (81349) 745-2365-000 A2A3R33	1	
13	RCR05G472KS	2	RESISTOR,FXD CMPSN, 4.7K, 10%, 1/8W (81349) 745-2365-000 A2A3R34	1	
14	N74LS00N	2	INTEGRATED CIRCUIT LOGIC GATE (18324) 351-1523-110 A2A3U76	1	
15	MC7404P	2	INTEGRATED CIRCUIT (04713) 351-7630-010 A2A3U77	1	
16	DM7489J	2	INTEGRATED CIRCUIT (27014) 351-7676-020 A2A3U78	1	
17	SN74LS175N	2	INTEGRATED CIRCUIT (34335) 351-1529-050 A2A3U102	1	
18	DM74155N	2	INTEGRATED CIRCUIT (27014) 351-7691-010 A2A3U101	1	
19	DM74LS02N	2	INTEGRATED CIRCUIT LOGIC GATE (27014) 351-1523-220 A2A3U100	1	
20	CK06BX104K	2	CAPACITOR,FXD CER DIEL, 0.1UF, PORM10%, 100V (81349) 913-5019-440 A2A3C22	1	
21	DM74LS02N	2	INTEGRATED CIRCUIT LOGIC GATE (27014) 351-1523-220 A2A3U99	1	
22	N74LS00N	2	INTEGRATED CIRCUIT LOGIC GATE (18324) 351-1523-110 A2A3U98	1	
23	SN74LS86N	2	INTEGRATED CIRCUIT (04713) 351-1698-010 A2A3U97	1	
24	RCR05G102KS	2	RESISTOR,FXD CMPSN, 1K, 10%, 1/8W (81349) 745-2341-000 A2A3R32	1	
25	CK06BX104K	2	CAPACITOR,FXD CER DIEL, 0.1UF, PORM10%, 100V (81349) 913-5019-440 A2A3C19	1	
26	SN74LS74AN	2	INTEGRATED CIRCUIT FLIP FLOP (04713) 351-1525-040 A2A3U73	1	
27	SN74LS164N	2	INTEGRATED CIRCUIT (01295) 351-1529-060 A2A3U74	1	
28	SN74LS74AN	2	INTEGRATED CIRCUIT FLIP FLOP (04713) 351-1525-040 A2A3U75	1	
29	RCR05G102KS	2	RESISTOR,FXD CMPSN, 1K, 10%, 1/8W (81349) 745-2341-000 A2A3R31	1	
30	CK06BX104K	2	CAPACITOR,FXD CER DIEL, 0.1UF, PORM10%, 100V (81349) 913-5019-440 A2A3C14	1	
31	N74LS00N	2	INTEGRATED CIRCUIT LOGIC GATE (18324) 351-1523-110 A2A3U49	1	
32	N74LS00N	2	INTEGRATED CIRCUIT LOGIC GATE (18324) 351-1523-110 A2A3U50	1	
33	DM74LS02N	2	INTEGRATED CIRCUIT LOGIC GATE (27014) 351-1523-220 A2A3U51	1	
34	DM7489J	2	INTEGRATED CIRCUIT (27014) 351-7676-020 A2A3U26	1	
35	314A152	2	RESISTOR NTWK DUAL-IN-LINE, 1.5K, 2%, 125V (01121) 350-4027-130 A2A3U27	1	
36	CK06BX104K	2	CAPACITOR,FXD CER DIEL, 0.1UF, PORM10%, 100V (81349) 913-5019-440 A2A3C2	1	
37*	372-2623-025	2	HOUSING,CONN,EL A2A3J1	1	
38	372-2234-010	2	CONTACT,ELEC	16	
39	372-2234-020	2	CONTACT,ELEC	16	
39A	280-2745-010	2	LABEL,PRESS SENS (12998) (EFF REV LTR R)	1	
40	372-2623-025	2	HOUSING,CONN,EL A2A3J2	1	

GROUP ASSEMBLY PARTS LIST

FIG-ITEM	PART NO	INDENT	DESCRIPTION	UNITS PER ASSY	USABLE ON CODE
8-41	372-2234-010	2	CONTACT,ELEC	16	
42	372-2234-020	2	CONTACT,ELEC	16	
43	DM74175N	2	INTEGRATED CIRCUIT (27014) 351-7800-010 A2A3U10	1	
44	SN74LS86N	2	INTEGRATED CIRCUIT (04713) 351-1698-010 A2A3U11	1	
45	629-9912-001	2	INTEGRATED CKT, PROM A2A3U12	1	
46	SN74LS175N	2	INTEGRATED CIRCUIT (34335) 351-1529-050 A2A3U34	1	
47	SN74LS86N	2	INTEGRATED CIRCUIT (04713) 351-1698-010 A2A3U35	1	
48	629-9912-002	2	INTEGRATED CKT, PROM A2A3U36	1	
49	CK06BX104K	2	CAPACITOR,FXD CER DIEL, 0.1UF, PORM10%, 100V (81349) 913-5019-440 A2A3C11	1	
50	SN74LS174N	2	INTEGRATED CIRCUIT (34335) 351-1529-040 A2A3U60	1	
51	SN74LS175N	2	INTEGRATED CIRCUIT (34335) 351-1529-050 A2A3U59	1	
52	SN7483AN	2	INTEGRATED CIRCUIT (01295) 351-7752-010 A2A3U58	1	
53	DM74155N	2	INTEGRATED CIRCUIT (27014) 351-7681-010 A2A3U84	1	
54	DM74175N	2	INTEGRATED CIRCUIT (27014) 351-7800-010 A2A3U83	1	
55	N74161A	2	INTEGRATED CIRCUIT (18324) 351-7750-010 A2A3U82	1	
56	316A472	2	RESISTOR NTWK 4.7K, 5%, 1.25W PKG (01121) 350-4030-020 A2A3U108	1	
57	DM74LS02N	2	INTEGRATED CIRCUIT LOGIC GATE (27014) 351-1523-220 A2A3U107	1	
58	SN74LS174N	2	INTEGRATED CIRCUIT (34335) 351-1529-040 A2A3U106	1	
59	CK06BX104K	2	CAPACITOR,FXD CER DIEL, 0.1UF, PORM10%, 100V (81349) 913-5019-440 A2A3C23	1	
60	SN74LS175N	2	INTEGRATED CIRCUIT (34335) 351-1529-050 A2A3U105	1	
61	SN74LS175N	2	INTEGRATED CIRCUIT (34335) 351-1529-050 A2A3U104	1	
62	SN74LS174N	2	INTEGRATED CIRCUIT (34335) 351-1529-040 A2A3U103	1	
63	DM7489J	2	INTEGRATED CIRCUIT (27014) 351-7676-020 A2A3U81	1	
64	314A152	2	RESISTOR NTWK DUAL-IN-LINE, 1.5K, 2%, 125V (01121) 350-4027-130 A2A3U80	1	
65	DM74126N	2	INTEGRATED CIRCUIT (27014) 351-7728-010 A2A3U79	1	
66	CK06BX104K	2	CAPACITOR,FXD CER DIEL, 0.1UF, PORM10%, 100V (81349) 913-5019-440 A2A3C15	1	
67	DM74126N	2	INTEGRATED CIRCUIT (27014) 351-7728-010 A2A3U55	1	
68	DM7489J	2	INTEGRATED CIRCUIT (27014) 351-7676-020 A2A3U56	1	
69	DM74157N	2	INTEGRATED CIRCUIT (27014) 351-7725-010 A2A3U57	1	
70	SN7483AN	2	INTEGRATED CIRCUIT (01295) 351-7752-010 A2A3U31	1	
71	SN74170N	2	INTEGRATED CIRCUIT (01295) 351-7817-010 A2A3U32	1	
72	SN74LS175N	2	INTEGRATED CIRCUIT (34335) 351-1529-050 A2A3U33	1	
73	CK06BX104K	2	CAPACITOR,FXD CER DIEL, 0.1UF, PORM10%, 100V (81349) 913-5019-440 A2A3C3	1	
74	SN7483AN	2	INTEGRATED CIRCUIT (01295) 351-7752-010 A2A3U7	1	
75	314A152	2	RESISTOR NTWK DUAL-IN-LINE, 1.5K, 2%, 125V (01121) 350-4027-130 A2A3U8	1	
76	SN74170N	2	INTEGRATED CIRCUIT (01295) 351-7817-010 A2A3U9	1	
77	SN74LS86N	2	INTEGRATED CIRCUIT (04713) 351-1698-010 A2A3U13	1	
78	SN7483AN	2	INTEGRATED CIRCUIT (01295) 351-7752-010 A2A3U14	1	
79	CR64AU16-0000MHZ	2	CRYSTAL UNIT,QTZ 16.00000MHZ (81349) 269-7082-010 A2A3Y1	1	
80	DM5C040D300WV	2	CAPACITOR,FXD MICA DIEL, 4PF, PORM 0.5PF, 300V (72136) 912-4141-080 A2A3C8	1	
81	538011C0P092R	2	CAPACITOR,VAR CER DIEL, 5.5 TO 18PF, 350V (72982) 917-1222-000 A2A3C7	1	
82	RCR07G103KS	2	RESISTOR,FXD CMPSN, 10K, 10%, 1/4W (81349) 745-0785-000 A2A3R35	1	
83	RCR07G472KS	2	RESISTOR,FXD CMPSN, 4.7K, 10%, 1/4W (81349) 745-0773-000 A2A3R21	1	
84	2N918	2	TRANSISTOR (07910) 352-0440-000 A2A3Q1	1	
85	MC7404P	2	INTEGRATED CIRCUIT (04713) 351-7630-010 A2A3U17	1	
86	SN7483AN	2	INTEGRATED CIRCUIT (01295) 351-7752-010 A2A3U18	1	
87	RCR07G333KS	2	RESISTOR,FXD CMPSN, 33K, 10%, 1/4W (81349) 745-0803-000 A2A3R3	1	
88	DM5F101J050WV	2	CAPACITOR,FXD MICA DIEL, 100PF, 5%, 50V (72136) 912-4141-050 A2A3C9	1	

GROUP ASSEMBLY PARTS LIST

FIG-ITEM	PART NO	INDENT	DESCRIPTION	UNITS PER ASSY	USABLE ON CODE
8-89	SN74LS174N	2	INTEGRATED CIRCUIT (34335) 351-1529-040 A2A3U40	1	
90	SN74LS174N	2	INTEGRATED CIRCUIT (34335) 351-1529-040 A2A3U41	1	
91	74153PC	2	INTEGRATED CIRCUIT (34335) 351-7724-010 A2A3U42	1	
92	SN74LS174N	2	INTEGRATED CIRCUIT (34335) 351-1529-040 A2A3U64	1	
93	SN74LS174N	2	INTEGRATED CIRCUIT (34335) 351-1529-040 A2A3U65	1	
94	74153PC	2	INTEGRATED CIRCUIT (34335) 351-7724-010 A2A3U66	1	
95	SN7486AN	2	INTEGRATED CIRCUIT (01295) 351-7752-010 A2A3U68	1	
96	SN74LS175N	2	INTEGRATED CIRCUIT (34335) 351-1529-050 A2A3U89	1	
97	RCR05G474KS	2	RESISTOR,FXD CMPSN, 470K, 10%, 1/8W (81349) 745-2437-000 A2A3R8	1	
98	314A152	2	RESISTOR NTWK DUAL-IN-LINE, 1.5K, 2%, 125V (01121) 350-4027-130 A2A3U112	1	
99	DM7489J	2	INTEGRATED CIRCUIT (27014) 351-7676-020 A2A3U113	1	
100	7498P	2	INTEGRATED CIRCUIT (14433) 351-7703-010 A2A3U114	1	
101	RCR05G474KS	2	RESISTOR,FXD CMPSN, 470K, 10%, 1/8W (81349) 745-2437-000 A2A3R9	1	
102	RCR05G474KS	2	RESISTOR,FXD CMPSN, 470K, 10%, 1/8W (81349) 745-2437-000 A2A3R6	1	
103	RCR05G474KS	2	RESISTOR,FXD CMPSN, 470K, 10%, 1/8W (81349) 745-2437-000 A2A3R7	1	
104	RCR05G474KS	2	RESISTOR,FXD CMPSN, 470K, 10%, 1/8W (81349) 745-2437-000 A2A3R10	1	
105	M39003-01-2289	2	CAPACITOR,FXD ELCTLT, 15UF, 10%, 20V (81349) 184-9086-490 A2A3C5	1	
106	M39003-01-2289	2	CAPACITOR,FXD ELCTLT, 15UF, 10%, 20V (81349) 184-9086-490 A2A3C6	1	
107	CK06BX104K	2	CAPACITOR,FXD CER DIEL, 0.1UF, PORM10%, 100V (81349) 913-5019-440 A2A3C40	1	
108	CK06BX104K	2	CAPACITOR,FXD CER DIEL, 0.1UF, PORM10%, 100V (81349) 913-5019-440 A2A3C41	1	
109	MS14046-4	2	COIL,RF 10UH (96906) 240-1580-000 A2A3L3	1	
110	370-2601-086	2	CONTACT,ELEC	90	
111	MS14046-4	2	COIL,RF 10UH (96906) 240-1580-000 A2A3L4	1	
112	M39003-01-2261	2	CAPACITOR,FXD ELCTLT, 100UF, 10%, 10V (81349) 184-9086-210 A2A3C24	1	
113	M39003-01-2261	2	CAPACITOR,FXD ELCTLT, 100UF, 10%, 10V (81349) 184-9086-210 A2A3C1	1	
114	MS18130-1	2	COIL,RF 0.15UH (96906) 240-1562-000 A2A3L1	1	
115	MS18130-1	2	COIL,RF 0.15UH (96906) 240-1562-000 A2A3L2	1	
116	CK06BX104K	2	CAPACITOR,FXD CER DIEL, 0.1UF, PORM10%, 100V (81349) 913-5019-440 A2A3C20	1	
117	DM74LS02N	2	INTEGRATED CIRCUIT LOGIC GATE (27014) 351-1523-220 A2A3U35	1	
118	SN74LS74AN	2	INTEGRATED CIRCUIT FLIP FLOP (04713) 351-1525-040 A2A3U86	1	
119	DM7489J	2	INTEGRATED CIRCUIT (27014) 351-7676-020 A2A3U87	1	
120	CK06BX104K	2	CAPACITOR,FXD CER DIEL, 0.1UF, PORM10%, 100V (81349) 913-5019-440 A2A3C17	1	
121	SN74LS174N	2	INTEGRATED CIRCUIT (34335) 351-1529-040 A2A3U61	1	
122	SN74LS174N	2	INTEGRATED CIRCUIT (34335) 351-1529-040 A2A3U62	1	
123	MC7404P	2	INTEGRATED CIRCUIT (04713) 351-7630-010 A2A3U63	1	
124	SN74LS86N	2	INTEGRATED CIRCUIT (04713) 351-1698-010 A2A3U37	1	
125	SN7486AN	2	INTEGRATED CIRCUIT (01295) 351-7752-010 A2A3U38	1	
126	SN74LS174N	2	INTEGRATED CIRCUIT (34335) 351-1529-040 A2A3U39	1	
127	CK06BX104K	2	CAPACITOR,FXD CER DIEL, 0.1UF, PORM10%, 100V (81349) 913-5019-440 A2A3C18	1	
128	CK06BX104K	2	CAPACITOR,FXD CER DIEL, 0.1UF, PORM10%, 100V (81349) 913-5019-440 A2A3C13	1	
129	SN74170N	2	INTEGRATED CIRCUIT (01295) 351-7817-010 A2A3U20	1	
130	SN74LS164N	2	INTEGRATED CIRCUIT (01295) 351-1529-060 A2A3U21	1	
131	SN74LS164N	2	INTEGRATED CIRCUIT (01295) 351-1529-060 A2A3U22	1	
132	SN74LS164N	2	INTEGRATED CIRCUIT (01295) 351-1529-060 A2A3U23	1	
133	SN74LS164N	2	INTEGRATED CIRCUIT (01295) 351-1529-060 A2A3U24	1	

GROUP ASSEMBLY PARTS LIST

FIG-ITEM	PART NO	INDENT	DESCRIPTION	UNITS PER ASSY	USABLE ON CODE
8-134	CK06BX104K	2	CAPACITOR,FXD CER DIEL, 0.1UF, PORM10%, 100V (81349) 913-5019-440 A2A3C4	1	
135	SN74LS86N	2	INTEGRATED CIRCUIT (04713) 351-1698-010 A2A3U46	1	
136	SN74LS86N	2	INTEGRATED CIRCUIT (04713) 351-1698-010 A2A3U47	1	
137	SN74LS174N	2	INTEGRATED CIRCUIT (34335) 351-1529-040 A2A3U48	1	
138	629-9912-002	2	INTEGRATED CKT, PROM A2A3U70	1	
139	629-9912-001	2	INTEGRATED CKT, PROM A2A3U71	1	
140	SN74LS86N	2	INTEGRATED CIRCUIT (04713) 351-1698-010 A2A3U72	1	
141	CK06BX104K	2	CAPACITOR,FXD CER DIEL, 0.1UF, PORM10%, 100V (81349) 913-5019-440 A2A3C16	1	
142	CK05BX150K	2	CAPACITOR,FXD CER DIEL, 15PF, PORM10%, 200V (81349) 913-5019-030 A2A3C36	1	
143	CK06BX104K	2	CAPACITOR,FXD CER DIEL, 0.1UF, PORM10%, 100V (81349) 913-5019-440 A2A3C35	1	
144	RN55D3831F	2	RESISTOR,FXD FILM, 3.83K, 1%, 1/8W (81349) 705-1024-000 A2A3R27	1	
145	RN55D1271F	2	RESISTOR,FXD FILM, 1.27K, 1%, 1/8W (81349) 705-1001-000 A2A3R28	1	
146	RCR07G472KS	2	RESISTOR,FXD CMPSN, 4.7K, 10%, 1/4W (81349) 745-0773-000 A2A3R29	1	
147	CK06BX104K	2	CAPACITOR,FXD CER DIEL, 0.1UF, PORM10%, 100V (81349) 913-5019-440 A2A3C34	1	
148	RN55E1022B	2	RESISTOR,FXD FILM, 10.2K, 0.1%, 1/10W (81349) 705-5975-490 A2A3R11	1	
149	CK06BX104K	2	CAPACITOR,FXD CER DIEL, 0.1UF, PORM10%, 100V (81349) 913-5019-440 A2A3C31	1	
150	MC1408L-8	2	INTEGRATED CIRCUIT (04713) 351-1152-010 A2A3U95	1	
151	AD562KD8IN	2	CONVERTER,DA (24355) 351-1298-010 A2A3U118	1	
152	TSW3800-24BW	2	SOCKET,IC (23880) 220-0075-050	1	
153	778-9422-001	2	SPACER,SLEEVE	6	
154	CK06BX104K	2	CAPACITOR,FXD CER DIEL, 0.1UF, PORM10%, 100V (81349) 913-5019-440 A2A3C39	1	
155	CK06BX104K	2	CAPACITOR,FXD CER DIEL, 0.1UF, PORM10%, 100V (81349) 913-5019-440 A2A3C33	1	
156	RCR07G103KS	2	RESISTOR,FXD CMPSN, 10K, 10%, 1/4W (81349) 745-0785-000 A2A3R30	1	
157	MS75089-11	2	COIL,RF 100UH (96906) 240-2715-370 A2A3L5	1	
158	CK05BX330K	2	CAPACITOR,FXD CER DIEL, 33PF, PORM10%, 200V (81349) 913-5019-070 A2A3C37	1	
159	LM101AH	2	INTEGRATED CIRCUIT (27014) 351-1040-020 A2A3U117	1	
160	SN7406N	2	INTEGRATED CIRCUIT (01295) 351-7632-010 A2A3U116	1	
161	SN74LS175N	2	INTEGRATED CIRCUIT (34335) 351-1529-050 A2A3U115	1	
162	CK06BX104K	2	CAPACITOR,FXD CER DIEL, 0.1UF, PORM10%, 100V (81349) 913-5019-440 A2A3C32	1	
163	RN55D1002F	2	RESISTOR,FXD FILM, 10K, 1%, 1/8W (81349) 705-1044-000 A2A3R24	1	
164	RN55D1002F	2	RESISTOR,FXD FILM, 10K, 1%, 1/8W (81349) 705-1044-000 A2A3R23	1	
165	RN55D1002F	2	RESISTOR,FXD FILM, 10K, 1%, 1/8W (81349) 705-1044-000 A2A3R25	1	
166	AD11-125	2	INTEGRATED CIRCUIT (ESDS) (24355) 351-1159-050 A2A3U92	1	
167	TSW3800-16BW	2	SOCKET,IC (23880) 220-0075-030	13	
168	CK06BX104K	2	CAPACITOR,FXD CER DIEL, 0.1UF, PORM10%, 100V (81349) 913-5019-440 A2A3C29	1	
169	MS75089-11	2	COIL,RF 100UH (96906) 240-2715-370 A2A3L6	1	
170	CK06BX104K	2	CAPACITOR,FXD CER DIEL, 0.1UF, PORM10%, 100V (81349) 913-5019-440 A2A3C30	1	
171	CK06BX104K	2	CAPACITOR,FXD CER DIEL, 0.1UF, PORM10%, 100V (81349) 913-5019-440 A2A3C21	1	
172	CK05BX103K	2	CAPACITOR,FXD CER DIEL, 0.01UF, PORM10%, 100V (81349) 913-5019-200 A2A3C38	1	

GROUP ASSEMBLY PARTS LIST

FIG-ITEM	PART NO	INDENT	DESCRIPTION	UNITS PER ASSY	USABLE ON CODE
8-173	SN74LS74AN	2	INTEGRATED CIRCUIT FLIP FLOP (04713) 351-1525-040 A2A3U67	1	
174	N74LS00N	2	INTEGRATED CIRCUIT LOGIC GATE (18324) 351-1523-110 A2A3U68	1	
175	CK06BX104K	2	CAPACITOR,FXD CER DIEL, 0.1UF, PORM10%, 100V (81349) 913-5019-440 A2A3C12	1	
176	SN74LS86N	2	INTEGRATED CIRCUIT (04713) 351-1698-010 A2A3U69	1	
177	SN74170N	2	INTEGRATED CIRCUIT (01295) 351-7817-010 A2A3U43	1	
178	314A152	2	RESISTOR NTWK DUAL-IN-LINE, 1.5K, 2%, 125V (01121) 350-4027-130 A2A3U44	1	
179	DM74175N	2	INTEGRATED CIRCUIT (27014) 351-7800-010 A2A3U45	1	
180	SN7483AN	2	INTEGRATED CIRCUIT (01295) 351-7752-010 A2A3U19	1	
181	372-2623-016	2	HOUSING,CONN,EL A2A3J3	1	
182	372-2234-010	2	CONTACT,ELEC	7	
183	372-2234-020	2	CONTACT,ELEC	7	

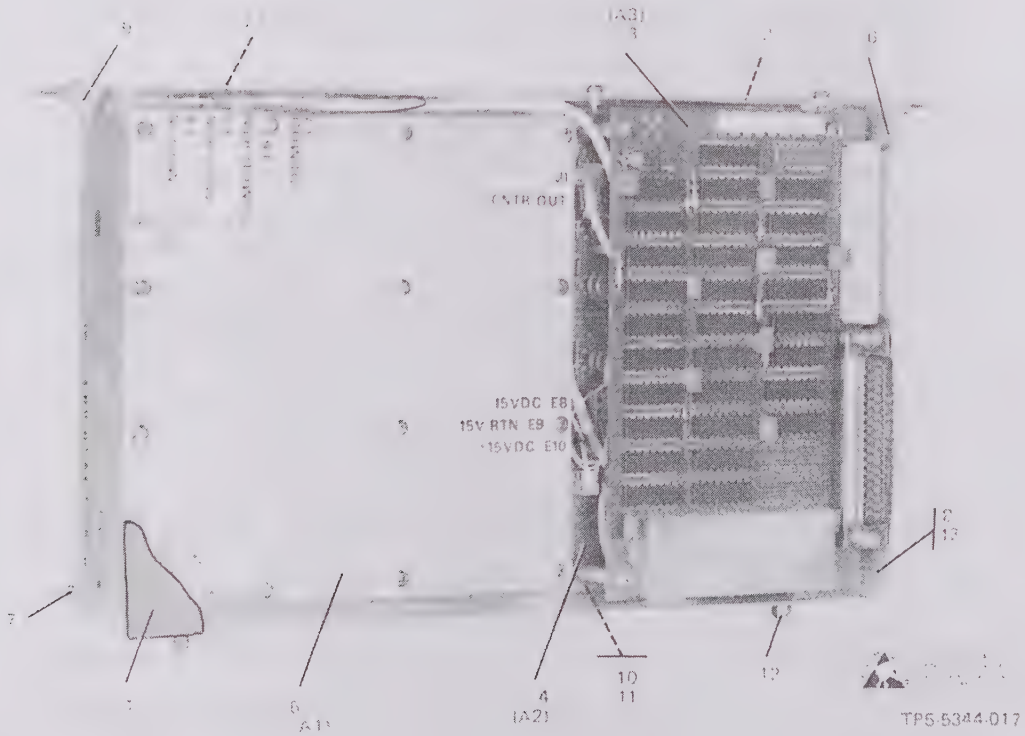

Rf Modulator Assembly A3
Figure 9

GROUP ASSEMBLY PARTS LIST

FIG-ITEM	PART NO	INDENT	DESCRIPTION	UNITS PER ASSY	USABLE ON CODE
9-	629-9750-002	1	RF MODULATOR ASSEMBLY (ESDS) A3 (SEE FIG 1-6 FOR NHA)	REF	
1	629-9752-001	2	COVER	1	
2	629-9766-001	2	COVER, ADJUSTMENT	1	
	MS51957-15	2	SCREW,MACH STL, 4-40 X 3/8 (96906) 343-0135-000 (AP) (EFF TO REV LTR F)	2	
	MS51957-13	2	SCREW,MACH STL, 4-40 X 1/4 (96906) 343-0133-000 (AP) (EFF REV LTR F)	2	
	310-0045-000	2	WASHER,FLAT SST, 0.125 ID X 0.312 OD (79807) (AP)	2	
	MS35338-135	2	WASHER,LOCK SST, 0.115 ID X 0.209 OD (96906) 310-0279-000 (AP)	2	
3	601-5261-001	2	COUNTER-I/O BOARD ASSEMBLY (ESDS) A3A3 (SEE FIG 12)	1	
	MS51957-22	2	SCREW,MACH STL, 4-40 X 1 1/4 (96906) 343-0142-000 (AP)	4	
4	601-4915-002	2	DEMODULATOR/ACL BOARD (ESDS) A3A2 (SEE FIG 11)	1	
	MS51957-13	2	SCREW,MACH STL, 4-40 X 1/4 (96906) 343-0133-000 (AP)	2	
	MS35338-135	2	WASHER,LOCK SST, 0.115 ID X 0.209 OD (96906) 310-0279-000 (AP)	2	
5	601-5001-001	2	RF STRIP-LINE ASSEMBLY A3A1 (SEE FIG 10)	1	
	MS51957-15	2	SCREW,MACH STL, 4-40 X 3/8 (96906) 343-0135-000 (AP)	4	
	310-0045-000	2	WASHER,FLAT SST, 0.125 ID X 0.312 OD (79807) (AP)	4	
	MS35338-135	2	WASHER,LOCK SST, 0.115 ID X 0.209 OD (96906) 310-0279-000 (AP)	4	
6	629-9736-001	2	RIBBON CABLE	1	
7	629-9759-001	2	PIN (EFF TO REV LTR E)	2	
7A	280-2745-020	2	LABEL,PRESS SENS (12998) (EFF REV LTR G)	1	
8	629-9751-001	2	CHASSIS ASSEMBLY	1	
9	AN366DF632A	3	NUT,SLFLKG,PL AL, 6-32 (88044) 333-0248-000	2	
	MS20426AD3-3	3	RIVET,SOLID AL, 3/32 DIA X 3/16 (96906) 305-1361-000 (AP)	4	
10	629-9764-001	3	POST	4	
11	629-9931-001	3	POST, HEX	4	
12	540-7764-002	3	PIN, GUIDE	2	
13	629-9751-002	3	CHASSIS, WELDED	1	

GROUP ASSEMBLY PARTS LIST

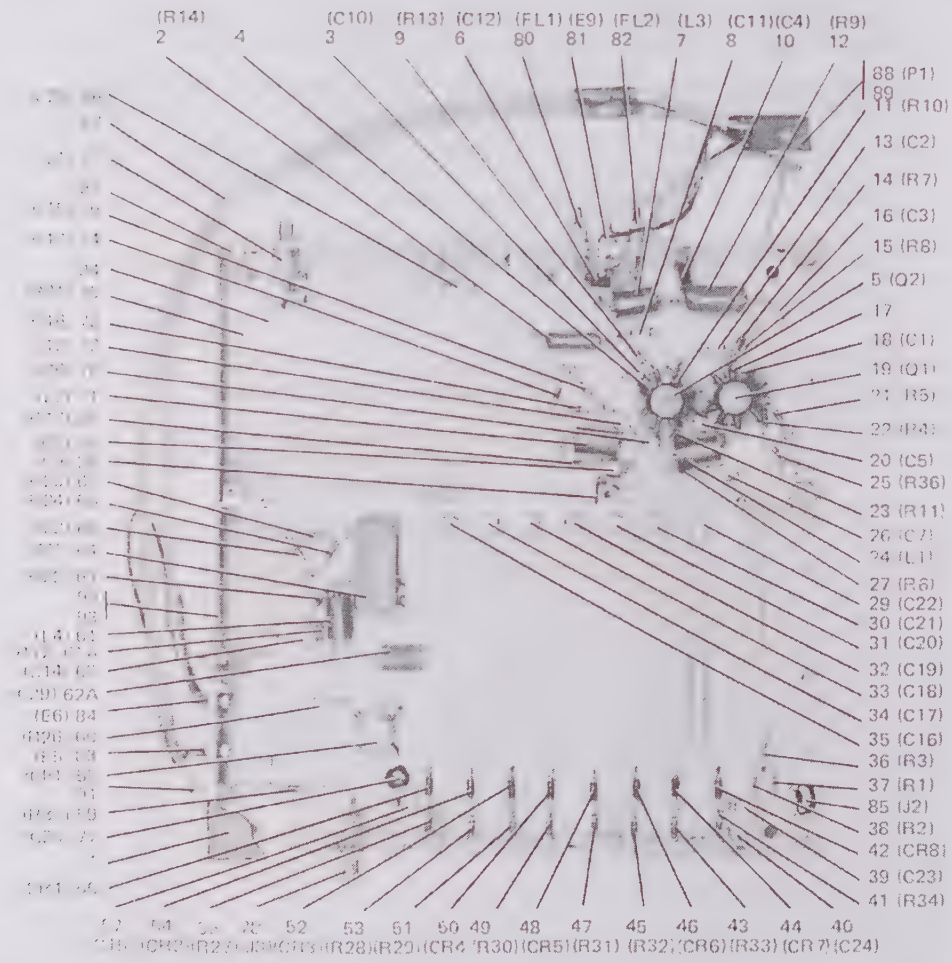

TP5-5349-017

RF Strip-Line Assembly A3A1
Figure 10

GROUP ASSEMBLY PARTS LIST

FIG-ITEM	PART NO	INDENT	DESCRIPTION	UNITS PER ASSY	USABLE ON CODE
10-	601-5001-001	1	RF STRIP-LINE ASSEMBLY A3A1 (SEE FIG 9-5 FOR NHA)	REF	
1	629-9754-001	2	COVER, SHIELD	1	
	MS51957-12	2	SCREW,MACH STL, 4-40 X 3/16 (96906) 343-0132-000 (AP)	14	
	MS35338-135	2	WASHER,LOCK SST, 0.115 ID X 0.209 OD (96906) 310-0279-000 (AP)	14	
2	RW69V151	2	RESISTOR,FXD 150 OHMS, 5%, 3W (81349) 747-5385-000 A3A1R14	1	
3	471KMSX200	2	CAPACITOR,FXD CER DIEL, 470PF, 10%, 100V (29990) 914-3098-640 A3A1C10	1	
4	204CB	2	HEAT SINK,SEMIC (05820) 352-9571-060	1	
5	SRF2263XRF525	2	TRANSISTOR,RF (04713) 352-1109-010 A3A1Q2	1	
6	CK05BX104K	2	CAPACITOR,FXD CER DIEL, 0.1UF, PORM10%, 50V (81349) 913-5019-320 A3A1C12	1	
7	VK20020-4B	2	COIL,RF 0.85K, PORM20% (02114) 240-2679-040 A3A1L3	1	
8	471KMSX200	2	CAPACITOR,FXD CER DIEL, 470PF, 10%, 100V (29990) 914-3098-640 A3A1C11	1	
9	RCR05G100JS	2	RESISTOR,FXD CMPSN, 10 OHMS, 5%, 1/8W (81349) 745-1863-010 A3A1R13	1	
10	CK05BX104K	2	CAPACITOR,FXD CER DIEL, 0.1UF, PORM10%, 50V (81349) 913-5019-320 A3A1C4	1	
11	RCR05G511JS	2	RESISTOR,FXD CMPSN, 510 OHMS, 5%, 1/8W (81349) 745-1863-420 A3A1R10	1	
12	RW69V221	2	RESISTOR,FXD 220 OHMS, 5%, 3W (81349) 747-5347-000 A3A1R9	1	
13	200JMSX500	2	CAPACITOR,FXD CER DIEL, 20FF, 5%, 500V (29990) 914-3098-590 A3A1C2 (EFF TO REV LTR L)	1	
13	518-024A2-5-9PF	2	CAPACITOR,VAR CER DIEL, 2.5 TO 9PF, 100V (72982) 917-1256-010 A3A1C2 (EFF REV LTR L)	1	
14	RCR05G150JS	2	RESISTOR,FXD CMPSN, 15 OHMS, 5%, 1/8W (81349) 745-1863-050 A3A1R7 (EFF TO REV LTR L)	1	
14	RCR05G100JS	2	RESISTOR,FXD CMPSN, 10 OHMS, 5%, 1/8W (81349) 745-1863-010 A3A1R7 (EFF REV LTR L)	1	
15	RCR05G150JS	2	RESISTOR,FXD CMPSN, 15 OHMS, 5%, 1/8W (81349) 745-1863-050 A3A1R8 (EFF TO REV LTR L)	1	
16	471KMSX200	2	CAPACITOR,FXD CER DIEL, 470PF, 10%, 100V (29990) 914-3098-640 A3A1C3	1	
17	204CB	2	HEAT SINK,SEMIC (05820) 352-9571-060	1	
18	200JMSX500	2	CAPACITOR,FXD CER DIEL, 20PF, 5%, 500V (29990) 914-3098-590 A3A1C1 (EFF TO REV LTR L)	1	
18	MA22130J	2	CAPACITOR,FXD CER DIEL, 13PF, 5%, 500V (73899) 914-3105-320 A3A1C1 (EFF REV LTR L)	1	
19	SRF2263XRF525	2	TRANSISTOR,RF (04713) 352-1109-010 A3A1Q1	1	
20	471KMSX200	2	CAPACITOR,FXD CER DIEL, 470PF, 10%, 100V (29990) 914-3098-640 A3A1C5	1	
21	RCR05G121JS	2	RESISTOR,FXD CMPSN, 120 OHMS, 5%, 1/8W (81349) 745-1863-270 A3A1R5	1	
22	RCR05G510JS	2	RESISTOR,FXD CMPSN, 51 OHMS, 5%, 1/8W (81349) 745-1863-180 A3A1R4	1	
23	RCR05G121JS	2	RESISTOR,FXD CMPSN, 120 OHMS, 5%, 1/8W (81349) 745-1863-270 A3A1R11 (EFF TO REV LTR L)	1	
23	RCR05G151JS	2	RESISTOR,FXD CMPSN, 150 OHMS, 5%, 1/8W (81349) 745-1863-290 A3A1R11 (EFF REV LTR L)	1	
24	VK20020-4B	2	COIL,RF 0.85K, PORM20% (02114) 240-2679-040 A3A1L1	1	
25	RCR05G121JS	2	RESISTOR,FXD CMPSN, 120 OHMS, 5%, 1/8W (81349) 745-1863-270 A3A1R36	1	
26	471KMSX200	2	CAPACITOR,FXD CER DIEL, 470PF, 10%, 100V (29990) 914-3098-640 A3A1C7	1	
27	RCR05G200JS	2	RESISTOR,FXD CMPSN, 20 OHMS, 5%, 1/8W (81349) 745-1863-080 A3A1R6	1	
28	CK05BX104K	2	CAPACITOR,FXD CER DIEL, 0.1UF, PORM10%, 50V (81349) 913-5019-320 A3A1C9	1	
29	471KMSX200	2	CAPACITOR,FXD CER DIEL, 470PF, 10%, 100V (29990) 914-3098-640 A3A1C22	1	

GROUP ASSEMBLY PARTS LIST

FIG-ITEM	PART NO	INDENT	DESCRIPTION	UNITS PER ASSY	USABLE ON CODE
10-30	471KMSX200	2	CAPACITOR,FXD CER DIEL, 470PF, 10%, 100V (29990) 914-3098-640 A3A1C21	1	
31	471KMSX200	2	CAPACITOR,FXD CER DIEL, 470PF, 10%, 100V (29990) 914-3098-640 A3A1C20	1	
32	471KMSX200	2	CAPACITOR,FXD CER DIEL, 470PF, 10%, 100V (29990) 914-3098-640 A3A1C19	1	
33	471KMSX200	2	CAPACITOR,FXD CER DIEL, 470PF, 10%, 100V (29990) 914-3098-640 A3A1C18	1	
34	471KMSX200	2	CAPACITOR,FXD CER DIEL, 470PF, 10%, 100V (29990) 914-3098-640 A3A1C17	1	
35	471KMSX200	2	CAPACITOR,FXD CER DIEL, 470PF, 10%, 100V (29990) 914-3098-640 A3A1C16	1	
36	SC9017T2-16-7-OH M	2	RESISTOR,RF (24602) 351-9054-010 A3A1R3	1	
37	SC9017T2-16-7-OH M	2	RESISTOR,RF (24602) 351-9054-010 A3A1R1	1	
38	SC9017T2-16-7-OH M	2	RESISTOR,RF (24602) 351-9054-010 A3A1R2	1	
39	471KMSX200	2	CAPACITOR,FXD CER DIEL, 470PF, 10%, 100V (29990) 914-3098-640 A3A1C23	1	
40	101KMS-500	2	CAPACITOR,FXD CER DIEL, 100PF, 10%, 500V (29990) 914-3098-510 A3A1C24	1	
41	RCR05G223JS	2	RESISTOR,FXD CMPSN, 22K, 5%, 1/8W (81349) 745-1863-810 A3A1R34	1	
42	1N5767	2	SEMICOND DEVICE (28480) 922-6119-010 A3A1CR8	1	
43	RCR05G183JS	2	RESISTOR,FXD CMPSN, 18K, 5%, 1/8W (81349) 745-1863-790 A3A1R33 (EFF TO REV LTR M)	1	
43	RCR05G223JS	2	RESISTOR,FXD CMPSN, 22K, 5%, 1/8W (81349) 745-1863-810 A3A1R33 (EFF REV LTR M)	1	
44	1N5767	2	SEMICOND DEVICE (28480) 922-6119-010 A3A1CR7	1	
45	RCR05G113JS	2	RESISTOR,FXD CMPSN, 11K, 5%, 1/8W (81349) 745-1863-740 A3A1R32 (EFF TO REV LTR M)	1	
45	RCR05G223JS	2	RESISTOR,FXD CMPSN, 22K, 5%, 1/8W (81349) 745-1863-810 A3A1R32 (EFF REV LTR M)	1	
46	1N5767	2	SEMICOND DEVICE (28480) 922-6119-010 A3A1CR6	1	
47	RCR05G362JS	2	RESISTOR,FXD CMPSN, 3.6K, 5%, 1/8W (81349) 745-1863-620 A3A1R31 (EFF TO REV LTR M)	1	
47	RCR05G223JS	2	RESISTOR,FXD CMPSN, 22K, 5%, 1/8W (81349) 745-1863-810 A3A1R31 (EFF REV LTR M)	1	
48	1N5767	2	SEMICOND DEVICE (28480) 922-6119-010 A3A1CR5	1	
49	RCR05G362JS	2	RESISTOR,FXD CMPSN, 3.6K, 5%, 1/8W (81349) 745-1863-620 A3A1R30 (EFF TO REV LTR M)	1	
49	RCR05G223JS	2	RESISTOR,FXD CMPSN, 22K, 5%, 1/8W (81349) 745-1863-810 A3A1R30 (EFF REV LTR M)	1	
50	1N5767	2	SEMICOND DEVICE (28480) 922-6119-010 A3A1CR4	1	
51	RCR05G113JS	2	RESISTOR,FXD CMPSN, 11K, 5%, 1/8W (81349) 745-1863-740 A3A1R29 (EFF TO REV LTR M)	1	
51	RCR05G223JS	2	RESISTOR,FXD CMPSN, 22K, 5%, 1/8W (81349) 745-1863-810 A3A1R29 (EFF REV LTR M)	1	
52	1N5767	2	SEMICOND DEVICE (28480) 922-6119-010 A3A1CR3	1	
53	RCR05G183JS	2	RESISTOR,FXD CMPSN, 18K, 5%, 1/8W (81349) 745-1863-790 A3A1R28 (EFF TO REV LTR M)	1	
53	RCR05G223JS	2	RESISTOR,FXD CMPSN, 22K, 5%, 1/8W (81349) 745-1863-810 A3A1R28 (EFF REV LTR M)	1	
54	1N5767	2	SEMICOND DEVICE (28480) 922-6119-010 A3A1CR2	1	
55	RCR05G223JS	2	RESISTOR,FXD CMPSN, 22K, 5%, 1/8W (81349) 745-1863-810 A3A1R27	1	
56	1N5767	2	SEMICOND DEVICE (28480) 922-6119-010 A3A1CR1	1	
57	471KMSX200	2	CAPACITOR,FXD CER DIEL, 470PF, 10%, 100V (29990) 914-3098-640 A3A1C15	1	
58	C114-1	2	COUPLER,DIR (12457) 277-0479-010 A3A1CP1	1	
59	RCR05G510JS	2	RESISTOR,FXD CMPSN, 51 OHMS, 5%, 1/8W (81349) 745-1863-180 A3A1R35	1	

GROUP ASSEMBLY PARTS LIST

FIG-ITEM	PART NO	INDENT	DESCRIPTION	UNITS PER ASSY	USABLE ON CODE
10-60	SC9017T2-50-OHM	2	RESISTOR,RF (24602) 351-9054-020 A3A1R26	1	
61	VK20020-4B	2	COIL,RF 0.85K, PORM20% (02114) 240-2679-040 A3A1L4	1	
61A	RCR05G510JS	2	RESISTOR,FXD CMPSN, 51 OHMS, 5%, 1/8W (81349) 745-1863-180 A3A1R37 (EFF REV LTR K)	1	
62	101KMSX500	2	CAPACITOR,FXD CER DIEL, 100PF, 10%, 500V (29990) 914-3098-510 A3A1C14 (EFF TO REV LTR K)	1	
62	471KMSX200	2	CAPACITOR,FXD CER DIEL, 470PF, 10%, 100V (29990) 914-3098-640 A3A1C14 (EFF REV LTR K)	1	
	634-9307-001	2	CAPACITOR KIT (NON-PROCURABLE ITEM) (EFF REV LTR H)	1	
62A	2R2CMSX500	3	CAPACITOR,FXD CER DIEL, 2.2PF, PORM 0.25PF, 500V (29990) 914-3098-710 A3A1C29	AR	
62A	4R3CMSX500	3	CAPACITOR,FXD CER DIEL, 4.3PF, PORM 0.25PF, 500V (29990) 914-3098-720 A3A1C29	AR	
63	RCR05G101JS	2	RESISTOR,FXD CMPSN, 100 OHMS, 5%, 1/8W (81349) 745-1863-250 A3A1R25 (EFF TO REV LTR J)	1	
	634-9749-001	2	RESISTOR KIT (NON-PROCURABLE ITEM) (EFF REV LTR J)	1	
63	RCR05G201JS	3	RESISTOR,FXD CMPSN, 200 OHMS, 5%, 1/8W (81349) 745-1863-320 A3A1R25	AR	
63	RCR05G221JS	3	RESISTOR,FXD CMPSN, 220 OHMS, 5%, 1/8W (81349) 745-1863-330 A3A1R25	AR	
63	RCR05G241JS	3	RESISTOR,FXD CMPSN, 240 OHMS, 5%, 1/8W (81349) 745-1863-340 A3A1R25	AR	
63	RCR05G271JS	3	RESISTOR,FXD CMPSN, 270 OHMS, 5%, 1/8W (81349) 745-1863-350 A3A1R25	AR	
63	RCR05G301JS	3	RESISTOR,FXD CMPSN, 300 OHMS, 5%, 1/8W (81349) 745-1863-360 A3A1R25	AR	
63	RCR05G331JS	3	RESISTOR,FXD CMPSN, 330 OHMS, 5%, 1/8W (81349) 745-1863-370 A3A1R25	AR	
63	RCR05G361JS	3	RESISTOR,FXD CMPSN, 360 OHMS, 5%, 1/8W (81349) 745-1863-380 A3A1R25	AR	
63	RCR05G391JS	3	RESISTOR,FXD CMPSN, 390 OHMS, 5%, 1/8W (81349) 745-1863-390 A3A1R25	AR	
63	RCR05G431JS	3	RESISTOR,FXD CMPSN, 430 OHMS, 5%, 1/8W (81349) 745-1863-400 A3A1R25	AR	
63	RCR05G471JS	3	RESISTOR,FXD CMPSN, 470 OHMS, 5%, 1/8W (81349) 745-1863-410 A3A1R25	AR	
63	RCR05G511JS	3	RESISTOR,FXD CMPSN, 510 OHMS, 5%, 1/8W (81349) 745-1863-420 A3A1R25	AR	
63	RCR05G561JS	3	RESISTOR,FXD CMPSN, 560 OHMS, 5%, 1/8W (81349) 745-1863-430 A3A1R25	AR	
63	RCR05G621JS	3	RESISTOR,FXD CMPSN, 620 OHMS, 5%, 1/8W (81349) 745-1863-440 A3A1R25	AR	
63	RCR05G681JS	3	RESISTOR,FXD CMPSN, 680 OHMS, 5%, 1/8W (81349) 745-1863-450 A3A1R25	AR	
63	RCR05G751JS	3	RESISTOR,FXD CMPSN, 750 OHMS, 5%, 1/8W (81349) 745-1863-460 A3A1R25	AR	
63	RCR05G821JS	3	RESISTOR,FXD CMPSN, 820 OHMS, 5%, 1/8W (81349) 745-1863-470 A3A1R25	AR	
63	RCR05G911JS	3	RESISTOR,FXD CMPSN, 910 OHMS, 5%, 1/8W (81349) 745-1863-480 A3A1R25	AR	
63	RCR05G102JS	3	RESISTOR,FXD CMPSN, 1K, 5%, 1/8W (81349) 745-1863-490 A3A1R25	AR	
63	RCR05G112JS	3	RESISTOR,FXD CMPSN, 1.1K, 5%, 1/8W (81349) 745-1863-500 A3A1R25	AR	
63	RCR05G132JS	3	RESISTOR,FXD CMPSN, 1.3K, 5%, 1/8W (81349) 745-1863-520 A3A1R25	AR	
63	RCR05G162JS	3	RESISTOR,FXD CMPSN, 1.6K, 5%, 1/8W (81349) 745-1863-540 A3A1R25	AR	
63	RCR05G202JS	3	RESISTOR,FXD CMPSN, 2K, 5%, 1/8W (81349) 745-1863-560 A3A1R25	AR	
63	RCR05G242JS	3	RESISTOR,FXD CMPSN, 2.4K, 5%, 1/8W (81349) 745-1863-580 A3A1R25	AR	

GROUP ASSEMBLY PARTS LIST

FIG-ITEM	PART NO	INDENT	DESCRIPTION	UNITS PER ASSY	USABLE ON CODE
10-63	RCR05G302JS	3	RESISTOR,FXD CMPSN, 3K, 5%, 1/8W (81349) 745-1863-600 A3A1R25	AR	
63	RCR05G362JS	3	RESISTOR,FXD CMPSN, 3.6K, 5%, 1/8W (81349) 745-1863-620 A3A1R25	AR	
63	RCR05G432JS	3	RESISTOR,FXD CMPSN, 4.3K, 5%, 1/8W (81349) 745-1863-640 A3A1R25	AR	
63	RCR05G512JS	3	RESISTOR,FXD CMPSN, 5.1K, 5%, 1/8W (81349) 745-1863-660 A3A1R25	AR	
64	M6E	2	MIXER,RF (27956) 277-0332-010 A3A1M1 (EFF TO REV LTR J)	1	
64	SRA1W	2	MIXER,RF (15542) 277-0583-010 A3A1M1 (EFF REV LTR J TO REV LTR L)	1	
64	M6E	2	MIXER,RF (27956) 277-0332-010 A3A1M1 (EFF REV LTR L)	1	
65	RCR05G151JS	2	RESISTOR,FXD CMPSN, 150 OHMS, 5%, 1/8W (81349) 745-1863-290 A3A1R24	1	
66	RCR05G151JS	2	RESISTOR,FXD CMPSN, 150 OHMS, 5%, 1/8W (81349) 745-1863-290 A3A1R22	1	
67	RCR05G360JS	2	RESISTOR,FXD CMPSN, 36 OHMS, 5%, 1/8W (81349) 745-1863-140 A3A1R23	1	
68	471KMSX200	2	CAPACITOR,FXD CER DIEL, 470PF, 10%, 100V (29990) 914-3098-640 A3A1C8	1	
69	RCR05G200JS	2	RESISTOR,FXD CMPSN, 20 OHMS, 5%, 1/8W (81349) 745-1863-080 A3A1R12	1	
70	471KMSX200	2	CAPACITOR,FXD CER DIEL, 470PF, 10%, 100V (29990) 914-3098-640 A3A1C6	1	
71	VK20020-4B	2	COIL,RF 0.85K, FORM20% (02114) 240-2679-040 A3A1L2	1	
72	471KMSX200	2	CAPACITOR,FXD CER DIEL, 470PF, 10%, 100V (29990) 914-3098-640 A3A1C13	1	
73	RCR05G360JS	2	RESISTOR,FXD CMPSN, 36 OHMS, 5%, 1/8W (81349) 745-1863-140 A3A1R16	1	
74	RCR05G151JS	2	RESISTOR,FXD CMPSN, 150 OHMS, 5%, 1/8W (81349) 745-1863-290 A3A1R17	1	
75	SC9017T2-50-OHM	2	RESISTOR,FF (24602) 351-9054-020 A3A1R21	1	
76	RCR05G151JS	2	RESISTOR,FXD CMPSN, 150 OHMS, 5%, 1/8W (81349) 745-1863-290 A3A1R15	1	
77	518-024A2-5-9PF	2	CAPACITOR,VAR CER DIEL, 2.5 TO 9PF, 100V (72982) 917-1256-010 A3A1C28 (EFF TO REV LTR F)	1	
77	5202	2	CAPACITOR,VAR AIR DIEL, 0.8 TO 10PF, 250V (91293) 922-0583-030 A3A1C28 (EFF REV LTR F)	1	
78	52-045-0000	2	CONNECTOR,ELEC ELEC (98291) 357-7193-010 A3A1J3	1	
79	52-045-0000	2	CONNECTOR,ELEC ELEC (98291) 357-7193-010 A3A1J1	1	
80	FL38SW1ED3-0001	2	FILTER,RAD INTR 1750PF (81349) 241-5006-010 A3A1FL1	1	
81	AB397-1A	2	TERMINAL,STUD (12615) 306-1286-000	1	
	P313-0050-000	2	NUT,PLAIN,HEX NP BRS, 2-56 (77250) 313-0050-000 (AP)	1	
	MS35338-134	2	WASHER,LOCK SST, 0.088 ID X 0.172 OD (96906) 310-0275-000 (AP)	1	
82	FL38SW1ED3-0001	2	FILTER,RAD INTR 1750PF (81349) 241-5006-010 A3A1FL2	1	
83	AB397-1A	2	TERMINAL,STUD (12615) 306-1286-000	1	
	P313-0050-000	2	NUT,PLAIN,HEX NP BRS, 2-56 (77250) 313-0050-000 (AP)	1	
	MS35338-134	2	WASHER,LOCK SST, 0.088 ID X 0.172 OD (96906) 310-0275-000 (AP)	1	
84	AB397-1A	2	TERMINAL,STUD (12615) 306-1286-000	1	
	P313-0050-000	2	NUT,PLAIN,HEX NP BRS, 2-56 (77250) 313-0050-000 (AP)	1	
	MS35338-134	2	WASHER,LOCK SST, 0.088 ID X 0.172 OD (96906) 310-0275-000 (AP)	1	
85	52-052-0000	2	CONNECTOR,RCPT ELEC (98291) 357-7195-030 A3A1J2	1	
86	471KMSX200	2	CAPACITOR,FXD CER DIEL, 470PF, 10%, 100V (29990) 914-3098-640 A3A1C25	1	
	1999	2	WASHER,LOCKING GLD PLD COP, 0.234 ID X .0297 OD (91293) 310-0778-010 (AP)	1	
87	629-9765-001	2	CABLE	1	
88	629-9776-004	3	CONNECTOR, MODIFIED A3A1P1	1	
89	372-2255-020	3	CONTACT,ELEC	7	

GROUP ASSEMBLY PARTS LIST

FIG-ITEM	PART NO	INDENT	DESCRIPTION	UNITS PER ASSY	USABLE ON CODE
10-90	629-9753-001	2	SHIELD, RF	1	
91	SL354-351WHT	3	TERMINAL,FEEDTH (12615) 306-2474-010	2	
92	504-7698-002	3	NUT, ANGLE	14	
93	629-9753-002	3	SHIELD	1	
94	629-9875-001	2	BOARD	1	

GROUP ASSEMBLY PARTS LIST

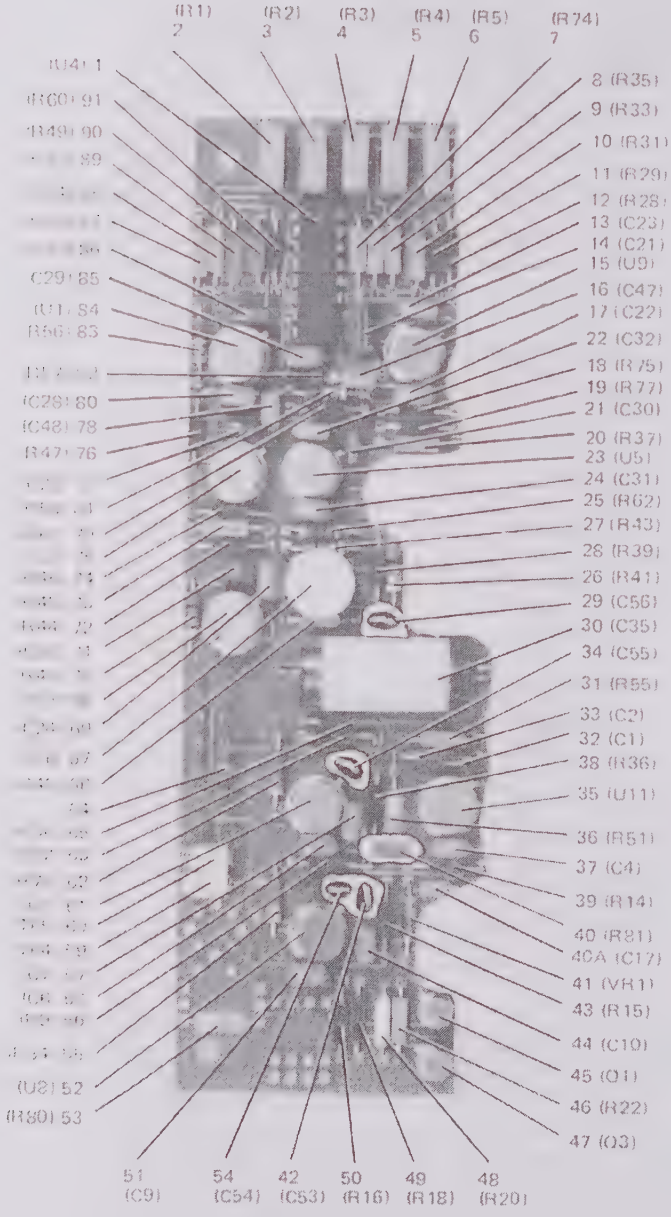

TP5-5373-027

Demodulator/ALC Assembly A3A2
Figure 11 (Sheet 1 of 2)

GROUP ASSEMBLY PARTS LIST

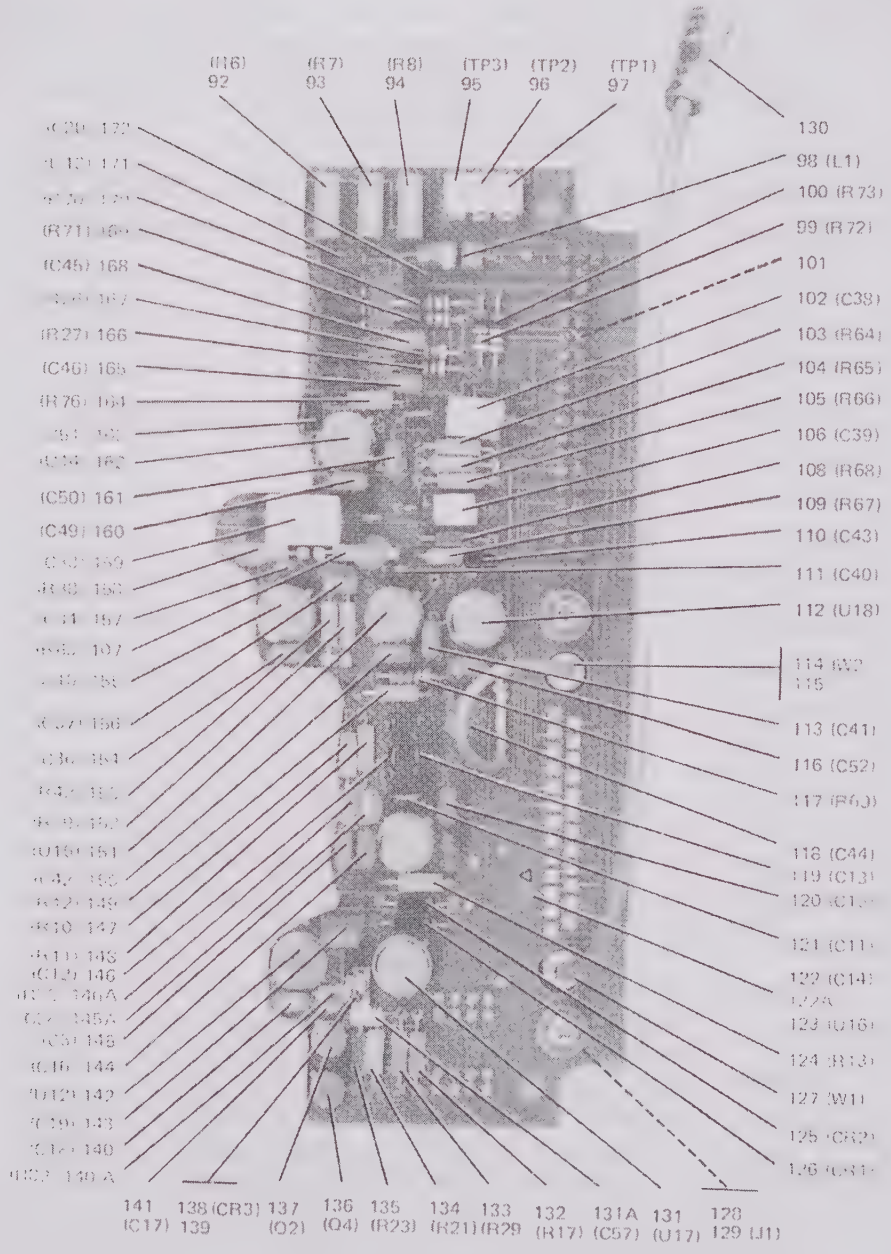

TP5-5373-027

Demodulator/ALC Assembly A3A2
Figure 11 (Sheet 2)

GROUP ASSEMBLY PARTS LIST

FIG-ITEM	PART NO	INDENT	DESCRIPTION	UNITS PER ASSY	USABLE ON CODE
11-	601-4915-002	1	DEMODULATOR/ALC BOARD (ESDS) A3A2 (SEE FIG 9-4 FOR NHA)	REF	
1	F4052PC	2	INTEGRATED CKT (ESDS) (07263) 351-8227-020 A3A2U4	1	
2	RT24C2X103	2	RESISTOR,VAR 10K, 5%, 3/4W (81349) 381-1853-300 A3A2R1 (EFF TO REV LTR Y)	1	
2	64X203	2	RESISTOR,VAR NON-WW,20K, 10% (02111) 382-0052-290 A3A2R1 (EFF REV LTR Y)	1	
3	RT24C2X103	2	RESISTOR,VAR 10K, 5%, 3/4W (81349) 381-1853-300 A3A2R2	1	
4	RT24C2X103	2	RESISTOR,VAR 10K, 5%, 3/4W (81349) 381-1853-300 A3A2R3	1	
5	RT24C2X103	2	RESISTOR,VAR 10K, 5%, 3/4W (81349) 381-1853-300 A3A2R4	1	
6	RT24C2X103	2	RESISTOR,VAR 10K, 5%, 3/4W (81349) 381-1853-300 A3A2R5	1	
7	RN55D5111F	2	RESISTOR,FXD FILM, 5.11K, 1%, 1/8W (81349) 705-1030-000 A3A2R74	1	
8	RN55E4022B	2	RESISTOR,FXD FILM, 40.2K, 0.1%, 1/10W (81349) 705-5976-640 A3A2R35 (EFF TO REV LTR R)	1	
8	RN55E4642B	2	RESISTOR,FXD FILM, 46K4K, 0.1%, 1/10W (81349) 705-5976-760 A3A2R35 (EFF REV LTR R)	1	
9	RN55E1912B	2	RESISTOR,FXD FILM, 19.1K, 0.1%, 1/10W (81349) 705-5976-020 A3A2R33 (EFF TO REV LTR R)	1	
9	RN55E2552B	2	RESISTOR,FXD FILM, 25.5K, 0.1%, 1/10W (81349) 705-5976-260 A3A2R33 (EFF REV LTR R)	1	
10	RN55E5971B	2	RESISTOR,FXD FILM, 5.97K, 0.1%, 1/10W (81349) 705-5975-040 A3A2R31	1	
11	RN55E1172B	2	RESISTOR,FXD FILM, 11.7K, 0.1%, 1/10W (81349) 705-5975-600 A3A2R29	1	
12	RN55E1102B	2	RESISTOR,FXD FILM, 11K, 0.1%, 1/10W (81349) 705-5975-550 A3A2R28 (EFF TO REV LTR R)	1	
12	RN55E1402B	2	RESISTOR,FXD FILM, 14K, 0.1%, 1/10W (81349) 705-5975-750 A3A2R28 (EFF REV LTR R)	1	
13	CY30C105M	2	CAPACITOR,FXD CER DIEL, 1UF, 20%, 50V (16546) 913-3279-270 A3A2C23	1	
14	CK06BX104K	2	CAPACITOR,FXD CER DIEL, 0.1UF, PORM10%, 100V (81349) 913-5019-440 A3A2C21	1	
15	LM218H	2	INTEGRATED CIRCUIT (34335) 351-1153-020 A3A2U9	1	
16	CY30C105M	2	CAPACITOR,FXD CER DIEL, 1UF, 20%, 50V (16546) 913-3279-270 A3A2C47	1	
17	CY30C105M	2	CAPACITOR,FXD CER DIEL, 1UF, 20%, 50V (16546) 913-3279-270 A3A2C22	1	
18	RN55D4992F	2	RESISTOR,FXD FILM, 49.9K, 1%, 1/8W (81349) 705-3605-810 A3A2R75	1	
19	RN55D2551F	2	RESISTOR,FXD FILM, 2.55K, 1%, 1/8W (81349) 705-3605-190 A3A2R77	1	
20	RN55E2002B	2	RESISTOR,FXD FILM, 20K, 0.1%, 1/10W (81349) 705-5976-060 A3A2R37	1	
21	DM5F151J050WV	2	CAPACITOR,FXD MICA DIEL, 150PF, 5%, 50V (72136) 912-4141-400 A3A2C30	1	
22	CY30C105M	2	CAPACITOR,FXD CER DIEL, 1UF, 20%, 50V (16546) 913-3279-270 A3A2C32	1	
23	LM108AH	2	INTEGRATED CIRCUIT (27014) 351-1095-030 A3A2U5	1	
24	CY30C105M	2	CAPACITOR,FXD CER DIEL, 1UF, 20%, 50V (16546) 913-3279-270 A3A2C31	1	
25	RCR07G473KS	2	RESISTOR,FXD CMPSN, 47K, 10%, 1/4W (81349) 745-0809-000 A3A2R62	1	
26	RCR07G103KS	2	RESISTOR,FXD CMPSN, 10K, 10%, 1/4W (81349) 745-0785-000 A3A2R41	1	
27	RCR07G102JS	2	RESISTOR,FXD CMPSN, 1K, 5%, 1/4W (81349) 745-0748-000 A3A2R43	1	
28	RN55D3013F	2	RESISTOR,FXD FILM, 301K, 1%, 1/8W (81349) 705-1115-000 A3A2R39	1	

GROUP ASSEMBLY PARTS LIST

FIG-ITEM	PART NO	INDENT	DESCRIPTION	UNITS PER ASSY	USABLE ON CODE
11-29	DM5E510J050WV	2	CAPACITOR,FXD MICA DIEL, 51PF, 5%, 50V (72136) 912-4141-300 A3A2C56	1	
30	LP88A1A565J	2	CAPACITOR,FXD PLSTC DIEL, 5.6UF, 5%, 50V (56289) 933-1084-370 A3A2C35	1	
31	RN55D1102F	2	RESISTOR,FXD FILM, 11K, 1%, 1/8W (81349) 705-1046-000 A3A2R55	1	
32	DM5E200D100WV	2	CAPACITOR,FXD MICA DIEL, 20PF, PORM 0.5PF, 100V (72136) 912-4141-150 A3A2C1	1	
33	DM5E510J050WV	2	CAPACITOR,FXD MICA DIEL, 51PF, 5%, 50V (72136) 912-4141-300 A3A2C2	1	
34	DM5C050D300WV	2	CAPACITOR,FXD MICA DIEL, 5PF, PORM 0.5PF, 300V (72136) 912-4141-010 A3A2C55	1	
35	HA2-2625-5	2	INTEGRATED CIRCUIT (34371) 351-1281-010 A3A2U11	1	
36	RN55D90R9F	2	RESISTOR,FXD FILM, 90.9 OHMS, 1%, 1/8W (81349) 705-0946-000 A3A2R51	1	
37	CY30C105M	2	CAPACITOR,FXD CER DIEL, 1UF, 20%, 50V (16546) 913-3279-270 A3A2C4	1	
38	RN55D1002F	2	RESISTOR,FXD FILM, 10K, 1%, 1/8W (81349) 705-1044-000 A3A2R36	1	
39	RN55D1002F	2	RESISTOR,FXD FILM, 10K, 1%, 1/8W (81349) 705-1044-000 A3A2R14 (EFF TO REV LTR M)	1	
39	RN55D4531F	2	RESISTOR,FXD FILM, 4.53K, 1%, 1/8W (81349) 705-3605-310 A3A2R14 (EFF REV LTR M TO REV LTR N)	1	
39	RN55D6191F	2	RESISTOR,FXD FILM, 6.19K, 1%, 1/8W (81349) 705-1034-000 A3A2R14 (EFF REV LTR N TO REV LTR R)	1	
39	RN55D1002F	2	RESISTOR,FXD FILM, 10K, 1%, 1/8W (81349) 705-1044-000 A3A2R14 (EFF REV LTR R TO REV LTR U)	1	
39	RN55D1402F	2	RESISTOR,FXD FILM, 14K, 1%, 1/8W (81349) 705-1051-000 A3A2R14 (EFF REV LTR U)	1	
40	RN55D9090F	2	RESISTOR,FXD FILM, 909 OHMS, 1%, 1/8W (81349) 705-0994-000 A3A2R81	1	
40A	DM5E330J050WV	2	CAPACITOR,FXD MICA DIEL, 33PF, 5%, 50V (72136) 912-4141-220 A3A2C17 (EFF REV LTR N)	1	
41	1N753A	2	SEMICOND DEVICE (81483) 353-2714-000 A3A2VR1 (EFF TO REV LTR L)	1	
41	1N4736A	2	SEMICOND DEVICE (04713) 353-6481-170 A3A2VR1 (EFF REV LTR L)	1	
42	DM5C050D300WV	2	CAPACITOR,FXD MICA DIEL, 5PF, PORM 0.5PF, 300V (72136) 912-4141-010 A3A2C53 (EFF TO REV LTR P)	1	
42	DM5C100D300WV	2	CAPACITOR,FXD MICA DIEL, 10PF, PORM 0.5PF, 300V (72136) 912-4141-020 A3A2C53 (EFF REV LTR P)	1	
43	RN55D2003F	2	RESISTOR,FXD FILM, 200K, 1%, 1/8W (81349) 705-3604-150 A3A2R15	1	
44	CY30C105M	2	CAPACITOR,FXD CER DIEL, 1UF, 20%, 50V (16546) 913-3279-270 A3A2C10	1	
45	2N2222A	2	TRANSISTOR (07263) 352-0661-020 A3A2Q1	1	
46	RN55D3831F	2	RESISTOR,FXD FILM, 3.83K, 1%, 1/8W (81349) 705-1024-000 A3A2R22	1	
47	2N2222A	2	TRANSISTOR (07263) 352-0661-020 A3A2Q3	1	
48	RN55D3241F	2	RESISTOR,FXD FILM, 3.24K, 1%, 1/8W (81349) 705-3605-240 A3A2R20	1	
49	RN55D2551F	2	RESISTOR,FXD FILM, 2.55K, 1%, 1/8W (81349) 705-3605-190 A3A2R18 (EFF TO REV LTR V)	1	
49	RN55D2151F	2	RESISTOR,FXD FILM, 2.15K, 1%, 1/8W (81349) 705-1012-000 A3A2R18 (EFF REV LTR V)	1	
50	RN55D9311F	2	RESISTOR,FXD FILM, 9.31K, 1%, 1/8W (81349) 705-3605-460 A3A2R16	1	
51	CY30C105M	2	CAPACITOR,FXD CER DIEL, 1UF, 20%, 50V (16546) 913-3279-270 A3A2C9	1	
52	LM218H	2	INTEGRATED CIRCUIT (34335) 351-1153-020 A3A2U8	1	
53	RN55E1001B	2	RESISTOR,FXD FILM, 1K, 0.1%, 1/10W (81349) 705-5973-530 A3A2R80	1	

GROUP ASSEMBLY PARTS LIST

FIG-ITEM	PART NO	INDENT	DESCRIPTION	UNITS PER ASSY	USABLE ON CODE
11-54	DM5C050D300WV	2	CAPACITOR,FXD MICA DIEL, 5PF, PORM 0.5PF, 300V (72136) 912-4141-010 A3A2C54	1	
55	RCR07G822KS	2	RESISTOR,FXD CMPSN, 8.2K, 10%, 1/4W (81349) 745-0782-000 A3A2R34	1	
56	RN55D2742F	2	RESISTOR,FXD FILM, 27.4K, 1%, 1/8W (81349) 705-1065-000 A3A2R9	1	
57	CY30C105M	2	CAPACITOR,FXD CER DIEL, 1UF, 20%, 50V (16546) 913-3279-270 A3A2C7	1	
58	CY30C105M	2	CAPACITOR,FXD CER DIEL, 1UF, 20%, 50V (16546) 913-3279-270 A3A2C6	1	
59	105-1101-001	2	JACK,TIP WHT (74970) 360-0434-010 A3A2TP4	1	
60	105-1101-001	2	JACK,TIP WHT (74970) 360-0484-010 A3A2TP5	1	
61	LM210H	2	INTEGRATED CIRCUIT (34335) 351-1153-020 A3A2U7	1	
62	RCR07G822KS	2	RESISTOR,FXD CMPSN, 8.2K, 10%, 1/4W (81349) 745-0782-000 A3A2R78	1	
63	RN55D3832F	2	RESISTOR,FXD FILM, 38.3K, 1%, 1/8W (81349) 705-1072-000 A3A2R32 (EFF TO REV LTR T)	1	
63	RN55D2742F	2	RESISTOR,FXD FILM, 27.4K, 1%, 1/8W (81349) 705-1065-000 A3A2R32 (EFF REV LTR T)	1	
64	745-5918-003	2	PIN, INDEXING	1	
65	RN55D1002F	2	RESISTOR,FXD FILM, 10K, 1%, 1/8W (81349) 705-1044-000 A3A2R30	1	
66	RN55D3013F	2	RESISTOR,FXD FILM, 301K, 1%, 1/8W (81349) 705-1115-000 A3A2R40	1	
67	LM399H	2	INTEGRATED CIRCUIT (03877) 351-1237-010 A3A2U6	1	
68	LM108AH	2	INTEGRATED CIRCUIT (27014) 351-1095-030 A3A2U3	1	
69	CY30C105M	2	CAPACITOR,FXD CER DIEL, 1UF, 20%, 50V (16546) 913-3279-270 A3A2C24	1	
70	RCR07G102JS	2	RESISTOR,FXD CMPSN, 1K, 5%, 1/4W (81349) 745-0748-000 A3A2R45	1	
71	DM5F151J050WV	2	CAPACITOR,FXD MICA DIEL, 150PF, 5%, 50V (72136) 912-4141-400 A3A2C25	1	
72	RN55D1002F	2	RESISTOR,FXD FILM, 10K, 1%, 1/8W (81349) 705-1044-000 A3A2R44	1	
73	RN55D5111F	2	RESISTOR,FXD FILM, 5.11K, 1%, 1/8W (81349) 705-1030-000 A3A2R48	1	
74	RN55D1002F	2	RESISTOR,FXD FILM, 10K, 1%, 1/8W (81349) 705-1044-000 A3A2R46	1	
75	LM108AH	2	INTEGRATED CIRCUIT (27014) 351-1095-030 A3A2U2	1	
76	RN55D1002F	2	RESISTOR,FXD FILM, 10K, 1%, 1/8W (81349) 705-1044-000 A3A2R47	1	
77	DM5F151J050WV	2	CAPACITOR,FXD MICA DIEL, 150PF, 5%, 50V (72136) 912-4141-400 A3A2C26	1	
78	CY30C105M	2	CAPACITOR,FXD CER DIEL, 1UF, 20%, 50V (16546) 913-3279-270 A3A2C48	1	
79	RN55D1003F	2	RESISTOR,FXD FILM, 100K, 1%, 1/8W (81349) 705-1092-000 A3A2R61	1	
80	CY30C105M	2	CAPACITOR,FXD CER DIEL, 1UF, 20%, 50V (16546) 913-3279-270 A3A2C28	1	
81	RCR07G104KS	2	RESISTOR,FXD CMPSN, 0.10MEGO, 10%, 1/4W (81349) 745-0821-000 A3A2R58	1	
82	RCR07G104KS	2	RESISTOR,FXD CMPSN, 0.10MEGO, 10%, 1/4W (81349) 745-0821-000 A3A2R57	1	
83	RCR07G103KS	2	RESISTOR,FXD CMPSN, 10K, 10%, 1/4W (81349) 745-0785-000 A3A2R56	1	
84	LM108AH	2	INTEGRATED CIRCUIT (27014) 351-1095-030 A3A2U1	1	
85	CY30C105M	2	CAPACITOR,FXD CER DIEL, 1UF, 20%, 50V (16546) 913-3279-270 A3A2C29	1	
86	DM5F151J050WV	2	CAPACITOR,FXD MICA DIEL, 150PF, 5%, 50V (72136) 912-4141-400 A3A2C27	1	
87	RN55E1002B	2	RESISTOR,FXD FILM, 10K, 0.1%, 1/10W (81349) 705-5975-470 A3A2R50 (EFF TO REV LTR R)	1	

GROUP ASSEMBLY PARTS LIST

FIG-ITEM	PART NO	INDENT	DESCRIPTION	UNITS PER ASSY	USABLE ON CODE
11-87	RN55E2321B	2	RESISTOR,FXD FILM, 2.32K, 0.1%, 1/10W (81349) 705-5974-240 A3A2R50 (EFF REV LTR R)	1	
88	RN55E9311B	2	RESISTOR,FXD FILM, 9.31K, 0.1%, 1/10W (81349) 705-5975-410 A3A2R54 (EFF TO REV LTR R)	1	
88	RN55E2001B	2	RESISTOR,FXD FILM, 2K, 0.1%, 1/10W (81349) 705-5974-120 A3A2R54 (EFF REV LTR R)	1	
89	RN55E1052B	2	RESISTOR,FXD FILM, 10.5K, 0.1%, 1/10W (81349) 705-5975-510 A3A2R52 (EFF TO REV LTR R)	1	
89	RN55E2551B	2	RESISTOR,FXD FILM, 2.55K, 0.1%, 1/10W (81349) 705-5974-320 A3A2R52 (EFF REV LTR R)	1	
90	RN55E2052B	2	RESISTOR,FXD FILM, 20.5K, 0.1%, 1/10W (81349) 705-5976-080 A3A2R49 (EFF TO REV LTR R)	1	
90	RN55E5621B	2	RESISTOR,FXD FILM, 5.62K, 0.1%, 1/10W (81349) 705-5974-980 A3A2R49 (EFF REV LTR R)	1	
91	RN55D1003F	2	RESISTOR,FXD FILM, 100K, 1%, 1/8W (81349) 705-1092-000 A3A2R60	1	
92	RT24C2X103	2	RESISTOR,VAR 10K, 5%, 3/4W (81349) 381-1853-300 A3A2R6	1	
93	RT24C2X103	2	RESISTOR,VAR 10K, 5%, 3/4W (81349) 381-1853-300 A3A2R7	1	
94	RT24C2X103	2	RESISTOR,VAR 10K, 5%, 3/4W (81349) 381-1853-300 A3A2R8	1	
95	105-1101-001	2	JACK,TIP WHT (74970) 360-0484-010 A3A2TP3	1	
96	105-1101-001	2	JACK,TIP WHT (74970) 360-0484-010 A3A2TP2	1	
97	105-1101-001	2	JACK,TIP WHT (74970) 360-0484-010 A3A2TP1	1	
98	MS75089-6	2	COIL,RF 39UH (96906) 240-2715-320 A3A2L1	1	
99	RCR07G103KS	2	RESISTOR,FXD CMPSN, 10K, 10%, 1/4W (81349) 745-0785-000 A3A2R72	1	
100	RCR07G103KS	2	RESISTOR,FXD CMPSN, 10K, 10%, 1/4W (81349) 745-0785-000 A3A2R73	1	
101	372-2601-045	2	CONTACT,ELEC	58	
102	LP88A1A394G	2	CAPACITOR,FXD PLSTC DIEL, 0.39UF, 2%, 50V (56289) 933-0264-200 A3A2C38	1	
103	RN55D1133F	2	RESISTOR,FXD FILM, 113K, 1%, 1/8W (81349) 705-3604-030 A3A2R64	1	
104	RN55D1133F	2	RESISTOR,FXD FILM, 113K, 1%, 1/8W (81349) 705-3604-030 A3A2R65	1	
105	RN55D5622F	2	RESISTOR,FXD FILM, 56.2K, 1%, 1/8W (81349) 705-1080-000 A3A2R66	1	
106	LP88A1A104G	2	CAPACITOR,FXD PLSTC DIEL, 0.1UF, 2%, 50V (56289) 933-0264-130 A3A2C39	1	
107	RN55E1003B	2	RESISTOR,FXD FILM, 100K, 0.1%, 1/10W (81349) 705-5977-410 A3A2R63	1	
108	RN55D1003F	2	RESISTOR,FXD FILM, 100K, 1%, 1/8W (81349) 705-1092-000 A3A2R68	1	
109	RN55D4992F	2	RESISTOR,FXD FILM, 49.9K, 1%, 1/8W (81349) 705-3605-810 A3A2R67	1	
110	DM5C100D300WV	2	CAPACITOR,FXD MICA DIEL, 10PF, PORM 0.5PF, 300V (72136) 912-4141-020 A3A2C43	1	
111	DM5C100D300WV	2	CAPACITOR,FXD MICA DIEL, 10PF, PORM 0.5PF, 300V (72136) 912-4141-020 A3A2C40	1	
112	LM101AH	2	INTEGRATED CIRCUIT (27014) 351-1040-020 A3A2U18	1	
113	CY30C105M	2	CAPACITOR,FXD CER DIEL, 1UF, 20%, 50V (16546) 913-3279-270 A3A2C41	1	
114	629-9758-002	2	CABLE ASSEMBLY A3A2W2	1	
115	DM53740-5000	3	CONTACT,ELEC (71468) 371-0183-000	1	
116	CY30C105M	2	CAPACITOR,FXD CER DIEL, 1UF, 20%, 50V (16546) 913-3279-270 A3A2C52	1	
117	RCR07G333KS	2	RESISTOR,FXD CMPSN, 33K, 10%, 1/4W (81349) 745-0803-000 A3A2R69	1	
118	CY30C105M	2	CAPACITOR,FXD CER DIEL, 1UF, 20%, 50V (16546) 913-3279-270 A3A2C44	1	

GROUP ASSEMBLY PARTS LIST

FIG-ITEM	PART NO	INDENT	DESCRIPTION	UNITS PER ASSY	USABLE ON CODE
11-119	DM15F511J300WV4C R	2	CAPACITOR,FXD MICA DIEL, 510PF, 5%, 500V (72136) 912-2867-000 A3A2C13	1	
120	CY30C105M	2	CAPACITOR,FXD CER DIEL, 1UF, 20%, 50V (16546) 913-3279-270 A3A2C15	1	
121	DM5E200D100WV	2	CAPACITOR,FXD MICA DIEL, 20PF, PORM 0.5PF, 100V (72136) 912-4141-150 A3A2C11	1	
122	DM5E510J050WV	2	CAPACITOR,FXD MICA DIEL, 51PF, 5%, 50V (72136) 912-4141-300 A3A2C14	1	
122A	200-2745-010	2	LABEL,PRESS SENS (12998) (EFF REV LTR H)	1	
123	HA2-2625-5	2	INTEGRATED CIRCUIT (34371) 351-1281-010 A3A2U16	1	
124	RN55D5111F	2	RESISTOR,FXD FILM, 5.11K, 1%, 1/8W (81349) 705-1030-000 A3A2R13	1	
125	1N645	2	SEMICOND DEVICE (15238) 353-2607-000 A3A2CR2 (EFF TO REV LTR M)	1	
126	1N645	2	SEMICOND DEVICE (15238) 353-2607-000 A3A2CR1	1	
127	629-9758-001	2	CABLE ASSEMBLY A3A2W1	1	
128	629-0221-001	2	POST	2	
129	DCM27W2FB	2	CONNECTOR,RCPT ELEC (71468) 371-0393-010 A3A2J1	1	
	MS51957-12	2	SCREW,MACH STL, 4-40 X 3/16 (96906) 343-0132-000 (AP FOR 128, 129)	4	
	310-0045-000	2	WASHER,FLAT SST, 0.125 ID X 0.312 OD (79807) (AP FOR 128, 129)	2	
	310-0278-000	2	WASHER,LOCK SST, 0.115 ID X 0.202 OD (70318) (AP FOR 128,129) (EFF REV LTR R)	2	
130	52-307-3188	3	CONNECTOR,PLUG ELEC (98291) 357-7207-010	1	
131	1558H	2	INTEGRATED CIRCUIT OPNL AMPLIFIER (34335) 351-1071-020 A3A2U17	1	
131A	DM5E510J050WV	2	CAPACITOR,FXD MICA DIEL, 51PF, 5%, 50V (72136) 912-4141-300 A3A2C57 (EFF REV LTR N TO REV LTR P)	1	
131A	DM5F101J050WV	2	CAPACITOR,FXD MICA DIEL, 100PF, 5%, 50V (72136) 912-4141-050 A3A2C57 (EFF REV LTR P)	1	
132	RN55D1403F	2	RESISTOR,FXD FILM, 140K, 1%, 1/8W (81349) 705-1099-000 A3A2R17	1	
133	RN55D1782F	2	RESISTOR,FXD FILM, 17.8K, 1%, 1/8W (81349) 705-1056-000 A3A2R19	1	
134	RN55D1302F	2	RESISTOR,FXD FILM, 13K, 1%, 1/8W (81349) 705-3605-530 A3A2R21	1	
135	RN55D9311F	2	RESISTOR,FXD FILM, 9.31K, 1%, 1/8W (81349) 705-3605-460 A3A2R23	1	
136	2N2222A	2	TRANSISTOR (07263) 352-0661-020 A3A2Q4	1	
137	2N2222A	2	TRANSISTOR (07263) 352-0661-020 A3A2Q2	1	
138	1N645	2	SEMICOND DEVICE (15238) 353-2607-000 A3A2CR3 (EFF TO REV LTR P)	1	
139	RCCS250437-1C	2	INSULATOR,COMP (19080) 150-0792-090 (EFF TO REV LTR R)	1	
140	CY30C105M	2	CAPACITOR,FXD CER DIEL, 1UF, 20%, 50V (16546) 913-3279-270 A3A2C18	1	
140A	RWR81S1001FR	2	RESISTOR,FXD 1K, 1%, 1W (81349) 747-2183-970 A3A2R82 (EFF REV LTR M TO REV LTR P)	1	
141	CK06BX104K	2	CAPACITOR,FXD CER DIEL, 0.1UF, PORM10%, 100V (81349) 913-5019-440 A3A2C17 (EFF TO REV LTR N)	1	
142	LM218H	2	INTEGRATED CIRCUIT (34335) 351-1153-020 A3A2U12 (EFF TO REV LTR M)	1	
142	LM118H	2	INTEGRATED CIRCUIT (34335) 351-1153-030 A3A2U12 (EFF REV LTR M TO REV LTR N)	1	
142	HA2-2625-5	2	INTEGRATED CIRCUIT (34371) 351-1281-010 A3A2U12 (EFF REV LTR N)	1	
143	CY30C105M	2	CAPACITOR,FXD CER DIEL, 1UF, 20%, 50V (16546) 913-3279-270 A3A2C19	1	
144	CY30C105M	2	CAPACITOR,FXD CER DIEL, 1UF, 20%, 50V (16546) 913-3279-270 A3A2C16	1	
145	CY30C105M	2	CAPACITOR,FXD CER DIEL, 1UF, 20%, 50V (16546) 913-3279-270 A3A2C3	1	

GROUP ASSEMBLY PARTS LIST

FIG-ITEM	PART NO	INDENT	DESCRIPTION	UNITS PER ASSY	USABLE ON CODE
11-145A	DM5C050D300WV	2	CAPACITOR,FXD MICA DIEL, 5PF, PORM 0.5PF, 300V (72136) 912-4141-010 A3A2C58 (EFF REV LTR P)	1	
146	DM15F511J300WV4C R	2	CAPACITOR,FXD MICA DIEL, 510PF, 5%, 500V (72136) 912-2867-000 A3A2C12	1	
146A	RN55D2003F	2	RESISTOR,FXD FILM, 200K, 1%, 1/8W (81349) 705-3604-150 A3A2R83 (EFF REV LTR P)	1	
147	RN55E1002B	2	RESISTOR,FXD FILM, 10K, 0.1%, 1/10W (81349) 705-5975-470 A3A2R10	1	
148	RN55D1503F	2	RESISTOR,FXD FILM, 150K, 1%, 1/8W (81349) 705-3604-090 A3A2R11	1	
149	RN55D6651F	2	RESISTOR,FXD FILM, 6.65K, 1%, 1/8W (81349) 705-3605-390 A3A2R12	1	
150	CY30C105M	2	CAPACITOR,FXD CER DIEL, 1UF, 20%, 50V (16546) 913-3279-270 A3A2C42	1	
151	LM101AH	2	INTEGRATED CIRCUIT (27014) 351-1040-020 A3A2U15	1	
152	RN55E1003B	2	RESISTOR,FXD FILM, 100K, 0.1%, 1/10W (81349) 705-5977-410 A3A2R79	1	
153	RN55E1002B	2	RESISTOR,FXD FILM, 10K, 0.1%, 1/10W (81349) 705-5975-470 A3A2R42	1	
154	CY30C105M	2	CAPACITOR,FXD CER DIEL, 1UF, 20%, 50V (16546) 913-3279-270 A3A2C36	1	
155	HA2-2625-5	2	INTEGRATED CIRCUIT (34371) 351-1081-010 A3A2U10	1	
156	CY30C105M	2	CAPACITOR,FXD CER DIEL, 1UF, 20%, 50V (16546) 913-3279-270 A3A2C37	1	
157	DM5E510J050WV	2	CAPACITOR,FXD MICA DIEL, 51PF, 5%, 50V (72136) 912-4141-300 A3A2C34	1	
158	RN55E1581B	2	RESISTOR,FXD FILM, 1.58K, 0.1%, 1/10W (81349) 705-5973-910 A3A2R38 (EFF TO REV LTR R)	1	
158	RN55E2211B	2	RESISTOR,FXD FILM, 2.21K, 0.1%, 1/10W (81349) 705-5974-200 A3A2R38 (EFF REV LTR R TO REV LTR U)	1	
158	RN55E2321B	2	RESISTOR,FXD FILM, 2.32K, 0.1%, 1/10W (81349) 705-5974-240 A3A2R38 (EFF REV LTR U)	1	
159	LP88A1A105J	2	CAPACITOR,FXD PLSTC DIEL, 1UF, 5%, 50V (56289) 933-1084-250 A3A2C33	1	
160	CY30C105M	2	CAPACITOR,FXD CER DIEL, 1UF, 20%, 50V (16546) 913-3279-270 A3A2C49	1	
161	CY30C105M	2	CAPACITOR,FXD CER DIEL, 1UF, 20%, 50V (16546) 913-3279-270 A3A2C50	1	
162	LM101AH	2	INTEGRATED CIRCUIT (27014) 351-1040-020 A3A2U14	1	
163	DM5C100D300WV	2	CAPACITOR,FXD MICA DIEL, 10PF, PORM 0.5PF, 300V (72136) 912-4141-020 A3A2C51	1	
164	RN55D1503F	2	RESISTOR,FXD FILM, 150K, 1%, 1/8W (81349) 705-3604-090 A3A2R76	1	
165	CY30C105M	2	CAPACITOR,FXD CER DIEL, 1UF, 20%, 50V (16546) 913-3279-270 A3A2C46	1	
166	RCR07G104KS	2	RESISTOR,FXD CMPSN, 0.10MEGO, 10%, 1/4W (81349) 745-0821-000 A3A2R27	1	
167	RCR07G104KS	2	RESISTOR,FXD CMPSN, 0.10MEGO, 10%, 1/4W (81349) 745-0821-000 A3A2R26	1	
168	CY30C105M	2	CAPACITOR,FXD CER DIEL, 1UF, 20%, 50V (16546) 913-3279-270 A3A2C45	1	
169	RCR07G103KS	2	RESISTOR,FXD CMPSN, 10K, 10%, 1/4W (81349) 745-0785-000 A3A2R71	1	
170	RCR07G103KS	2	RESISTOR,FXD CMPSN, 10K, 10%, 1/4W (81349) 745-0785-000 A3A2R70	1	
171	F4052PC	2	INTEGRATED CKT (ESDS) (07263) 351-6227-020 A3A2U13	1	
172	CK05BX103K	2	CAPACITOR,FXD CER DIEL, 0.01UF, PORM10%, 100V (81349) 913-5019-200 A3A2C20	1	

GROUP ASSEMBLY PARTS LIST

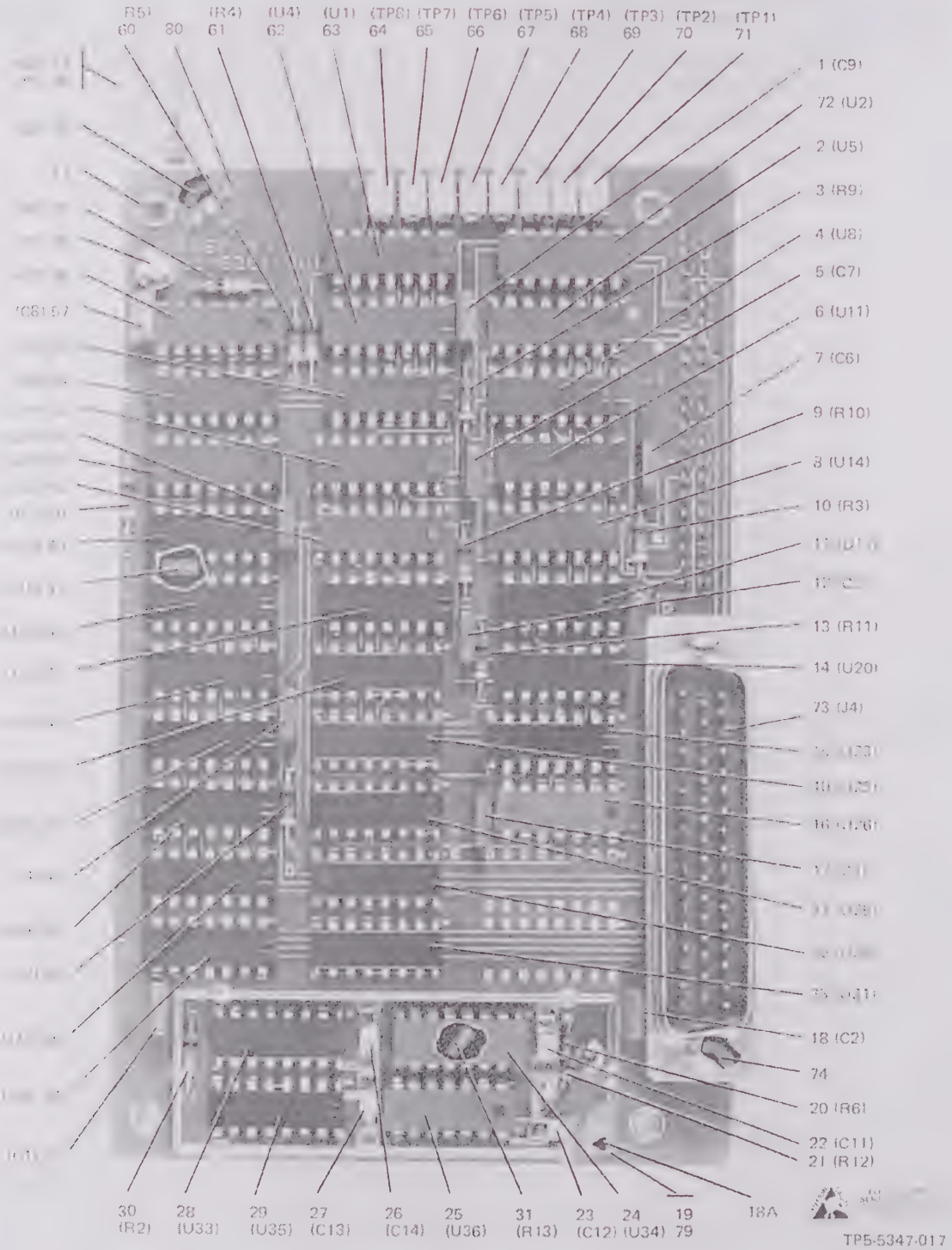

Counter I/O Board Assembly A3A3
Figure 12

GROUP ASSEMBLY PARTS LIST

FIG-ITEM	PART NO	INDENT	DESCRIPTION	UNITS PER ASSY	USABLE ON CODE
12-	601-5261-001	1	COUNTER-I/O BOARD (ESDS) A3A3 (SEE FIG 9-3 FOR NHA)	REF	
1	CY30C105M	2	CAPACITOR,FXD CER DIEL, 1UF, 20%, 50V (16546) 913-3279-270 A3A3C9	1	
2	SN74LS174N	2	INTEGRATED CIRCUIT (34335) 351-1529-040 A3A3U5	1	
3	RCR07G102KS	2	RESISTOR,FXD CMPSN, 1K, 10%, 1/4W (81349) 745-0749-000 A3A3R9	1	
4	SN74LS174N	2	INTEGRATED CIRCUIT (34335) 351-1529-040 A3A3U8	1	
5	CY30C105M	2	CAPACITOR,FXD CER DIEL, 1UF, 20%, 50V (16546) 913-3279-270 A3A3C7	1	
6	SN74LS74AN	2	INTEGRATED CIRCUIT FLIP FLOP (04713) 351-1525-040 A3A3U11	1	
7	CY30C105M	2	CAPACITOR,FXD CER DIEL, 1UF, 20%, 50V (16546) 913-3279-270 A3A3C6	1	
8	SN74LS174N	2	INTEGRATED CIRCUIT (34335) 351-1529-040 A3A3U14	1	
9	RCR07G102KS	2	RESISTOR,FXD CMPSN, 1K, 10%, 1/4W (81349) 745-0749-000 A3A3R10	1	
10	RCR07G102KS	2	RESISTOR,FXD CMPSN, 1K, 10%, 1/4W (81349) 745-0749-000 A3A3R3	1	
11	SN74LS74AN	2	INTEGRATED CIRCUIT FLIP FLOP (04713) 351-1525-040 A3A3U17	1	
12	CY30C105M	2	CAPACITOR,FXD CER DIEL, 1UF, 20%, 50V (16546) 913-3279-270 A3A3C5	1	
13	RCR07G102KS	2	RESISTOR,FXD CMPSN, 1K, 10%, 1/4W (81349) 745-0749-000 A3A3R11	1	
14	SN74LS74AN	2	INTEGRATED CIRCUIT FLIP FLOP (04713) 351-1525-040 A3A3U20	1	
15	SN74LS174N	2	INTEGRATED CIRCUIT (34335) 351-1529-040 A3A3U23	1	
16	SN7406N	2	INTEGRATED CIRCUIT (01295) 351-7632-010 A3A3U26	1	
17	CY30C105M	2	CAPACITOR,FXD CER DIEL, 1UF, 20%, 50V (16546) 913-3279-270 A3A3C3	1	
18	CY30C105M	2	CAPACITOR,FXD CER DIEL, 1UF, 20%, 50V (16546) 913-3279-270 A3A3C2	1	
18A	280-2745-010	2	LABEL,FRESS SENS (12998) (EFF REV LTR H)	1	
19	629-9756-001	2	COVER, SHIELD	1	
20	RCR05G561JS	2	RESISTOR,FXD CMPSN, 560 OHMS, 5%, 1/8W (81349) 745-1863-430 A3A3R6	1	
21	RCR05G510JS	2	RESISTOR,FXD CMPSN, 51 OHMS, 5%, 1/8W (81349) 745-1863-180 A3A3R12	1	
22	471KMSX200	2	CAPACITOR,FXD CER DIEL, 470PF, 10%, 100V (29990) 914-3098-640 A3A3C11	1	
23	471KMSX200	2	CAPACITOR,FXD CER DIEL, 470PF, 10%, 100V (29990) 914-3098-640 A3A3C12	1	
24	11C90DC	2	INTEGRATED CIRCUIT (07263) 351-1653-020 A3A3U34 (EFF TO REV LTR G)	1	
24	11C90DC	2	INTEGRATED CIRCUIT (07263) 351-1653-040 A3A3U34 (EFF REV LTR G)	1	
25	SN74S00N	2	INTEGRATED CIRCUIT (01295) 351-7770-010 A3A3U36	1	
26	471KMSX200	2	CAPACITOR,FXD CER DIEL, 470PF, 10%, 100V (29990) 914-3098-640 A3A3C14	1	
27	471KMSX200	2	CAPACITOR,FXD CER DIEL, 470PF, 10%, 100V (29990) 914-3098-640 A3A3C13	1	
28	DM74S112N	2	INTEGRATED CIRCUIT (27014) 351-7813-020 A3A3U33	1	
29	DM74S112N	2	INTEGRATED CIRCUIT (27014) 351-7813-020 A3A3U35	1	
30	RCR07G102KS	2	RESISTOR,FXD CMPSN, 1K, 10%, 1/4W (81349) 745-0749-000 A3A3R2	1	
31	RCR05G511JS	2	RESISTOR,FXD CMPSN, 510 OHMS, 5%, 1/8W (81349) 745-1863-420 A3A3R13	1	
32	CY30C105M	2	CAPACITOR,FXD CER DIEL, 1UF, 20%, 50V (16546) 913-3279-270 A3A3C1	1	
33	N8T97N	2	INTEGRATED CIRCUIT (18324) 351-1267-020 A3A3U31	1	
34	SN74LS90N	2	INTEGRATED CIRCUIT (01295) 351-1636-010 A3A3U30	1	
35	N8T97N	2	INTEGRATED CIRCUIT (18324) 351-1267-020 A3A3U28	1	
36	SN74LS90N	2	INTEGRATED CIRCUIT (01295) 351-1636-010 A3A3U27	1	

GROUP ASSEMBLY PARTS LIST

FIG-ITEM	PART NO	INDENT	DESCRIPTION	UNITS PER ASSY	USABLE ON CODE
12-37	N8T97N	2	INTEGRATED CIRCUIT (18324) 351-1267-020 A3A3U25	1	
38	SN74LS90N	2	INTEGRATED CIRCUIT (01295) 351-1636-010 A3A3U24	1	
39	RCR07G102JS	2	RESISTOR,FXD CMPSN, 1K, 5%, 1/4W (81349) 745-0748-000 A3A3R7	1	
40	N8T97N	2	INTEGRATED CIRCUIT (18324) 351-1267-020 A3A3U22	1	
41	SN74LS90N	2	INTEGRATED CIRCUIT (01295) 351-1636-010 A3A3U21	1	
42	CY30C105M	2	CAPACITOR,FXD CER DIEL, 1UF, 20%, 50V (16546) 913-3279-270 A3A3C4	1	
43	N8T97N	2	INTEGRATED CIRCUIT (18324) 351-1267-020 A3A3U19	1	
44	SN74LS90N	2	INTEGRATED CIRCUIT (01295) 351-1636-010 A3A3U18	1	
45	SN74LS90N	2	INTEGRATED CIRCUIT (01295) 351-1636-010 A3A3U16	1	
46	DM74LS02N	2	INTEGRATED CIRCUIT LOGIC GATE (27014) 351-1523-220 A3A3U15	1	
47	DM5F331J050WV	2	CAPACITOR,FXD MICA DIEL, 330PF, 5%, 50V (72136) 912-4141-490 A3A3C15	1	
48	SN74LS138N	2	INTEGRATED CIRCUIT (04713) 351-1526-030 A3A3U13	1	
49	N74LS00N	2	INTEGRATED CIRCUIT LOGIC GATE (18324) 351-1523-110 A3A3U12	1	
50	RCR07G102KS	2	RESISTOR,FXD CMPSN, 1K, 10%, 1/4W (81349) 745-0749-000 A3A3R1	1	
51	CY30C105M	2	CAPACITOR,FXD CER DIEL, 1UF, 20%, 50V (16546) 913-3279-270 A3A3C10	1	
52	SN74LS74AN	2	INTEGRATED CIRCUIT FLIP FLOP (04713) 351-1525-040 A3A3U9	1	
53	SN74LS138N	2	INTEGRATED CIRCUIT (04713) 351-1526-030 A3A3U10	1	
54	SN74LS90N	2	INTEGRATED CIRCUIT (01295) 351-1636-010 A3A3U6	1	
55	SN74LS90N	2	INTEGRATED CIRCUIT (01295) 351-1636-010 A3A3U7	1	
56	SN7406N	2	INTEGRATED CIRCUIT (01295) 351-7632-010 A3A3U3	1	
57	CY30C105M	2	CAPACITOR,FXD CER DIEL, 1UF, 20%, 50V (16546) 913-3279-270 A3A3C8	1	
58	2N2222A	2	TRANSISTOR (07263) 352-0661-020 A3A3Q1	1	
59	RCR07G103KS	2	RESISTOR,FXD CMPSN, 10K, 10%, 1/4W (81349) 745-0785-000 A3A3P8	1	
60	RCR07G102KS	2	RESISTOR,FXD CMPSN, 1K, 10%, 1/4W (81349) 745-0749-000 A3A3R5	1	
61	RCR07G102KS	2	RESISTOR,FXD CMPSN, 1K, 10%, 1/4W (81349) 745-0749-000 A3A3R4	1	
62	SN74LS90N	2	INTEGRATED CIRCUIT (01295) 351-1636-010 A3A3U4	1	
63	SN74LS90N	2	INTEGRATED CIRCUIT (01295) 351-1636-010 A3A3U1	1	
64	105-1101-001	2	JACK,TIP WHT (74970) 360-0484-010 A3A3TP8	1	
65	105-1101-001	2	JACK,TIP WHT (74970) 360-0484-010 A3A3TP7	1	
66	105-1101-001	2	JACK,TIP WHT (74970) 360-0484-010 A3A3TP6	1	
67	105-1101-001	2	JACK,TIP WHT (74970) 360-0484-010 A3A3TP5	1	
68	105-1101-001	2	JACK,TIP WHT (74970) 360-0484-010 A3A3TP4	1	
69	105-1101-001	2	JACK,TIP WHT (74970) 360-0484-010 A3A3TP3	1	
70	105-1101-001	2	JACK,TIP WHT (74970) 360-0484-010 A3A3TP2	1	
71	105-1101-001	2	JACK,TIP WHT (74970) 360-0484-010 A3A3TP1	1	
72	DM5407J	2	INTEGRATED CIRCUIT (27014) 351-7715-020 A3A3U2	1	
73	DDU50PB	2	CONNECTOR,PLUG ELEC (71468) 371-0385-100 A3A3J4	1	
	D53018	2	SLIDING LK ASSY (71468) 370-2293-000 (AP)	2	
	MS35338-135	2	WASHER,LOCK SST, 0.115 ID X 0.209 OD (96906) 310-0279-000 (AP)	2	
	NAS620C4	2	WASHER,FLAT PSVT CRES, 0.115 ID X 0.209 OD (80205) 310-0740-240 (AP)	4	
74	540-9037-003	2	POST	2	
	MS51957-13	2	SCREW,MACH STL, 4-40 X 1/4 (96906) 343-0133-000 (AP)	2	
	NAS620C4	2	WASHER,FLAT PSVT CRES, 0.115 ID X 0.209 OD (80205) 310-0740-240 (AP)	2	
	MS35338-135	2	WASHER,LOCK SST, 0.115 ID X 0.209 OD (96906) 310-0279-000 (AP)	2	
75	52-053-0000	2	CONNECTOR,RCPT ELEC (98291) 357-7195-020 A3A3J2	1	
76	372-2601-033	2	CONTACT,ELEC	1	
77	629-9758-003	2	CABLE ASSEMBLY A3A3W3	1	

GROUP ASSEMBLY PARTS LIST

FIG-ITEM	PART NO	INDENT	DESCRIPTION	UNITS PER ASSY	USABLE ON CODE
12-78	51-311-3850	3	CONNECTOR,PLUG ELEC (98291) 357-0035-010 A3A3P1	1	
79	629-9755-001	2	SHIELD	1	
80	372-2601-143	2	CONTACT,ELEC	40	
81	778-9422-047	2	SPACER	4	

GROUP ASSEMBLY PARTS LIST

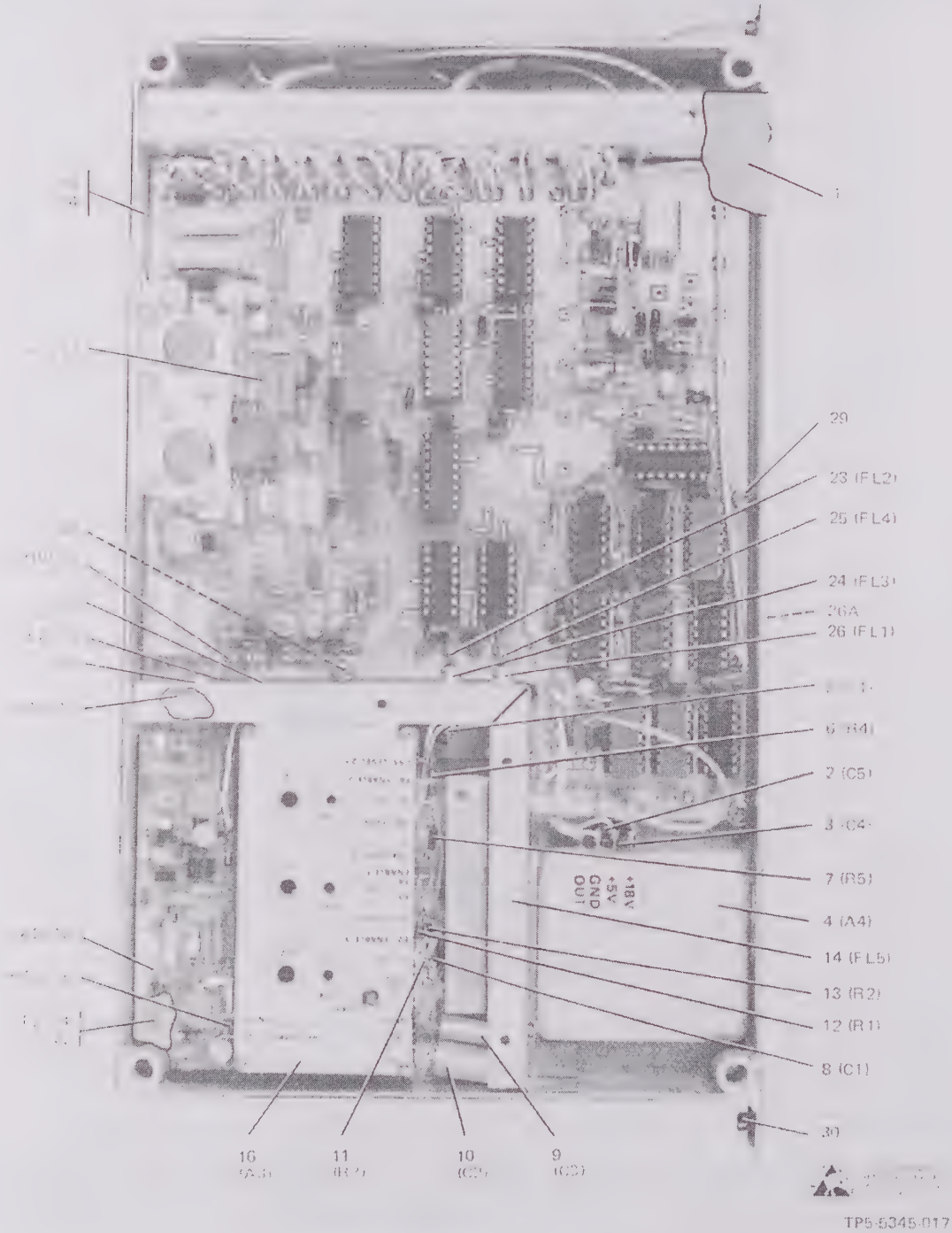

Synthesizer Assembly A4
Figure 18

GROUP ASSEMBLY PARTS LIST

FIG-ITEM	PART NO	INDENT	DESCRIPTION	UNITS PER ASSY	USABLE ON CODE
13-	629-9760-001	1	SYNTHESIZER ASSY (ESDS) A4 (SEE FIG 1-7 FOR NHA)	REF	
1	635-8511-001	2	COVER	1	
	MS51957-12	2	SCREW,MACH STL, 4-40 X 3/16 (96906) 343-0132-000 (AP)	8	
	310-0278-000	2	WASHER,LOCK SST, 0.115 ID X 0.202 OD (70318) (AP)	8	
2	CK06BX104K	2	CAPACITOR,FXD CER DIEL, 0.1UF, PORM10%, 100V (81349) 913-5019-440 A4C5	1	
3	CK06BX104K	2	CAPACITOR,FXD CER DIEL, 0.1UF, PORM10%, 100V (81349) 913-5019-440 A4C4	1	
4	MC386X2-002W	2	OSCILLATOR,TCXO (00136) 277-0442-020 A4A4	1	
	MS51957-13	2	SCREW,MACH STL, 4-40 X 1/4 (96906) 343-0133-000 (AP)	4	
	310-0278-000	2	WASHER,LOCK SST, 0.115 ID X 0.202 OD (70318) (AP)	4	
5	MS75089-11	2	COIL,RF 100UH (96906) 240-2715-370 A4L1	1	
	637-4321-001	2	RESISTOR KIT (NON-PROCURALE ITEM)	1	
6	RN55D---1F	3	RESISTOR, FXD FILM, 1K THRU 15K, 1 , 1/8W (81349) A4R4	AR	
	637-4321-001	2	RESISTOR KIT (NON-PROCURABLE ITEM)	1	
7	RN55D---1F	3	RESISTOR, FXD FILM, 1K THRU 15K, 1 , 1/8W (81349) A4R5	AR	
8	CK06BX474K	2	CAPACITOR,FXD CER DIEL, 0.47UF, PORM10%, 50V (81349) 913-5019-520 A4C1	1	
9	M39003-01-2312	2	CAPACITOR,FXD ELCTLT, 47UF, 10%, 35V (81349) 184-9086-720 A4C3	1	
10	M39003-01-2312	2	CAPACITOR,FXD ELCTLT, 47UF, 10%, 35V (81349) 184-9086-720 A4C2	1	
	637-4321-001	2	RESISTOR KIT (NON-PROCURABLE ITEM)	1	
11	RN55D---1F	3	RESISTOR, FXD FILM, 1K THRU 15K, 1 , 1/8W (81349) A4R3	AR	
12	RN55D4221F	2	RESISTOR,FXD FILM, 4.22K, 1%, 1/8W (81349) 705-1026-000 A4R1	1	
13	RN55D7870F	2	NUT, ANGLE FILM, 787 OHMS, 1%, 1/8W (81349) 705-0991-000 A4R2	1	
14	AFF700	2	FILTER,LP (80223) 673-0699-010 A4FL5	1	
	P313-0050-000	2	NUT,PLAIN,HEX NP BRS, 2-56 (77250) 313-0050-000 (AP)	2	
	310-0075-000	2	WASHER,LOCK BRZ, 0.088 ID X 0.165 OD (79807) (AP)	2	
	310-0053-000	2	WASHER,FLAT BRS, 0.093 ID X 0.250 OD (79807) (AP)	1	
	4007-4HT	2	TERMINAL,LUG (77147) 304-0015-000 (AP) (EFF TO REV LTR J)	2	
	4007-4HT	2	TERMINAL,LUG (77147) 304-0015-000 (AP) (EFF REV LTR J)	1	
	P343-0299-000	2	SCREW,MACH NP BRS, 2-56 X 1/4 (77250) 343-0299-000 (AP)	2	
15	RCR05G430JS	2	RESISTOR,FXD CMPSN, 43 OHMS, 5%, 1/8W (81349) 745-1863-160 A4R18 (EFF TO REV LTR K)	1	
15	RCR05G620JS	2	RESISTOR,FXD CMPSN, 62 OHMS, 5%, 1/8W (81349) 745-1863-200 A4R18 (EFF REV LTR K)	1	
16	635-8517-001	2	VCO ASSEMBLY A4A3	1	
	MS51957-2	2	SCREW,MACH SST, 2-56 X 3/16 (96906) 343-0123-000 (AP) (EFF TO REV LTR M)	8	
	310-0075-000	2	WASHER,LOCK BRZ, 0.088 ID X 0.165 OD (79807) (AP) (EFF TO REV LTR M)	8	
17	DM5E300J050WV	2	CAPACITOR,FXD MICA DIEL, 30PF, 5%, 50V (72136) 912-4141-200 A4C15	1	
18	637-2718-001	2	OUTPUT AMPLIFIER BOARD A4A2 (SEE FIG 16) (EFF TO REV LTR N)	1	
18	634-9681-001	2	OUTPUT AMPLIFIER BOARD A4A2 (SEE FIG 25) (EFF REV LTR N) (SB3)	1	
	P313-0050-000	2	NUT,PLAIN,HEX NP BRS, 2-56 (77250) 313-0050-000 (AP) (EFF TO REV LTR N)	3	
	310-0053-000	2	WASHER,FLAT BRS, 0.093 ID X 0.250 OD (79807) (AP) (EFF TO REV LTR N)	3	
	310-0075-000	2	WASHER,LOCK BRZ, 0.088 ID X 0.165 OD (79807) (AP) (EFF REV LTR N)(SB3)	2	

GROUP ASSEMBLY PARTS LIST

FIG-ITEM	PART NO	INDENT	DESCRIPTION	UNITS PER ASSY	USABLE ON CODE
13-	P343-0304-000	2	SCREW,MACH NP BRS, 2-56 X 3/4 (77250) 343-0304-000 (AP) (EFF TO REV LTR N)	3	
	P343-0299-000	2	SCREW,MACH NP BRS, 2-56 X 1/4 (77250) 343-0299-000 (AP) (EFF REV LTR N) (SB3)	2	
19	MS75083-13	2	COIL,RF 1UH (96906) 240-2023-000 A4L2	1	
20	RCR07G241JS	2	RESISTOR,FXD CMPSN, 240 OHMS, 5%, 1/4W (81349) 745-0726-000 A4R6	1	
21	52-312-9040	2	CONNECTOR,RCPT ELEC (98291) 357-7207-220 A4P2 (EFF TO REV LTR N)	1	
22	623-1379-001	2	ADAPTER, CONNECTOR	1	
	310-0148-000	2	WASHER,SPR TNSN CD PL STL, 0.203 ID X 3/8 OD (79807) (AP) (EFF TO REV LTR J)	1	
	3502-14-46S	2	WASHER,SPR TNSN CD PL STL, 0.257 ID X 0.510 OD (78189) 310-0463-040 (AP) (EFF REV LTR J)	1	
	540-3003-003	2	WASHER, FLAT (AP) (EFF REV LTR J)	1	
23	M15733-52-0003	2	FILTER,RAD INTR (81349) 241-5002-010 A4FL2	1	
24	M15733-52-0003	2	FILTER,RAD INTR (81349) 241-5002-010 A4FL3	1	
25	M15733-52-0003	2	FILTER,RAD INTR (81349) 241-5002-010 A4FL4	1	
26	M15733-52-0003	2	FILTER,RAD INTR (81349) 241-5002-010 A4FL1	1	
26A	280-2745-020	2	LABEL,PRESS SENS (12998) (EFF REV LTR T)	1	
27	635-8516-001	2	REGULATOR/ DIVIDER/FILTER ASSY (ESDS) A4A1 (SEE FIG 14)	1	
	MS51957-14	2	SCREW,MACH SST, 4-40 X 5/16 (96906) 343-0134-000 (AP)	3	
	MS51957-13	2	SCREW,MACH STL, 4-40 X 1/4 (96906) 343-0133-000 (AP)	5	
	P342-0145-000	2	SCREW,MACH NP BRS, 2-56 X 3/8 (77250) 342-0145-000 (AP)	2	
	MS51957-12	2	SCREW,MACH STL, 4-40 X 3/16 (96906) 343-0132-000 (AP)	1	
	310-6340-000	2	WASHER,FLAT SST, 0.125 ID X 0.281 OD (79807) (AP)	3	
	310-0278-000	2	WASHER,LOCK SST, 0.115 ID X 0.202 OD (70318) (AP)	6	
28	635-8510-001	2	CHASSIS	1	
29	563-2844-002	3	NUT, ANGLE	2	
30	MK7200-06	3	NUT,SLFLKG CD PL STL, 6-32 (15653) 334-2697-000	2	
31	G2522	3	TERMINAL,FEEDTH (21242) 306-0323-000	1	
32	12914A	3	TERMINAL,STUD (88245) 306-0983-000	1	
33	504-9478-002	3	NUT, ANGLE	1	
34	635-8510-002	3	CHASSIS, WELDED	1	

GROUP ASSEMBLY PARTS LIST

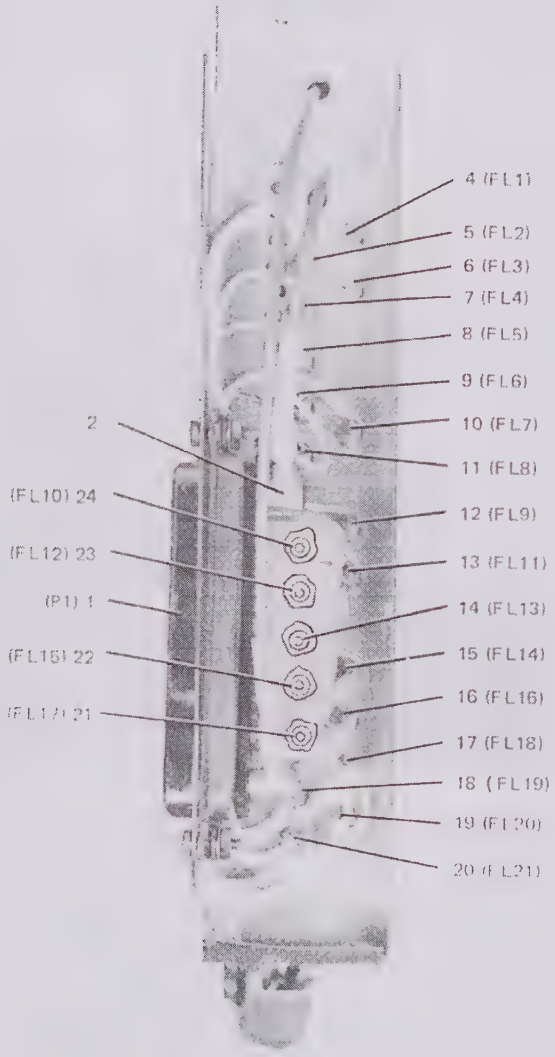

TP5-5346-027

Regulator/Divider/Filter Assembly A4A1
Figure 14 (Sheet 1 of 2)

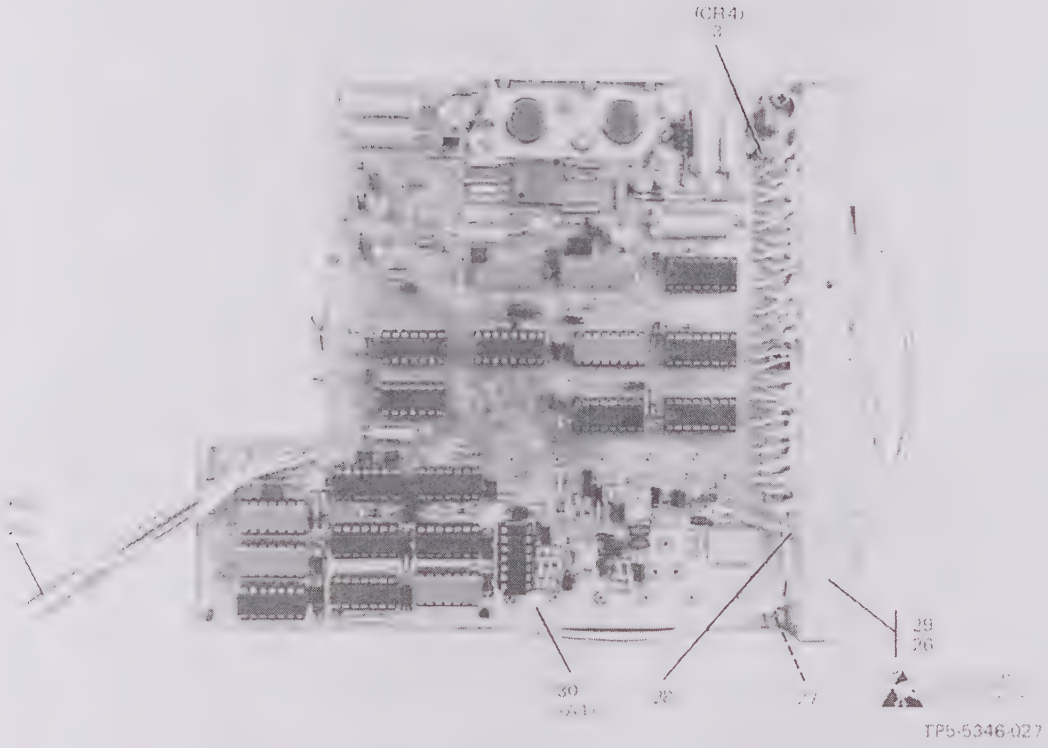

Regulator/Divider/Filter Assembly A4A1
Figure 14 (Sheet 2)

GROUP ASSEMBLY PARTS LIST

FIG-ITEM	PART NO	INDENT	DESCRIPTION	UNITS PER ASSY	USABLE ON CODE
14-	635-8516-001	1	REGULATOR/ DIVIDER/FILTER ASSY (ESDS) A4A1 (SEE FIG 13-27 FOR NHA)	REF	
1	DCMF27W2S	2	CONNECTOR,RCPT ELEC (71468) 371-0931-000 A4A1P1	1	
	P313-0050-000	2	NUT,PLAIN,HEX NP BRS, 2-56 (77250) 313-0050-000 (AP)	2	
	4007-4HT	2	TERMINAL,LUG (77147) 304-0015-000 (AP)	2	
	310-0070-000	2	WASHER,LOCK SST, 0.097 ID X 0.165 OD (79807) (AP)	2	
	310-6320-000	2	WASHER,FLAT SST, 0.092 X 0.219 OD (79807) (AP)	2	
	MS51957-4	2	SCREW,MACH CD PL STL, 2-56 X 5/16 (96906) 343-0125-000 (AP)	2	
2	DM53743-5000	2	CONTACT,PIN (71468) 371-2470-000	2	
3	1N4007	2	SEMICOND DEVICE (04713) 353-6442-070 A4A1CR4	1	
4	FL38GW1ED3-0001	2	FILTER,RAD INTR 1750PF (81349) 241-5006-010 A4A1FL1	1	
5	FL38GW1ED3-0001	2	FILTER,RAD INTR 1750PF (81349) 241-5006-010 A4A1FL2	1	
6	FL38GW1ED3-0001	2	FILTER,RAD INTR 1750PF (81349) 241-5006-010 A4A1FL3	1	
7	FL38GW1ED3-0001	2	FILTER,RAD INTR 1750PF (81349) 241-5006-010 A4A1FL4	1	
8	FL38GW1ED3-0001	2	FILTER,RAD INTR 1750PF (81349) 241-5006-010 A4A1FL5	1	
9	FL38GW1ED3-0001	2	FILTER,RAD INTR 1750PF (81349) 241-5006-010 A4A1FL6	1	
10	FL38GW1ED3-0001	2	FILTER,RAD INTR 1750PF (81349) 241-5006-010 A4A1FL7	1	
11	FL38GW1ED3-0001	2	FILTER,RAD INTR 1750PF (81349) 241-5006-010 A4A1FL8	1	
12	FL38GW1ED3-0001	2	FILTER,RAD INTR 1750PF (81349) 241-5006-010 A4A1FL9	1	
13	FL38GW1ED3-0001	2	FILTER,RAD INTR 1750PF (81349) 241-5006-010 A4A1FL11	1	
14	FL38GW1ED3-0001	2	FILTER,RAD INTR 1750PF (81349) 241-5006-010 A4A1FL13	1	
15	FL38GW1ED3-0001	2	FILTER,RAD INTR 1750PF (81349) 241-5006-010 A4A1FL14	1	
16	FL38GW1ED3-0001	2	FILTER,RAD INTR 1750PF (81349) 241-5006-010 A4A1FL16	1	
17	FL38GW1ED3-0001	2	FILTER,RAD INTR 1750PF (81349) 241-5006-010 A4A1FL18	1	
18	FL38GW1ED3-0001	2	FILTER,RAD INTR 1750PF (81349) 241-5006-010 A4A1FL19	1	
19	FL38GW1ED3-0001	2	FILTER,RAD INTR 1750PF (81349) 241-5006-010 A4A1FL20	1	
20	FL38GW1ED3-0001	2	FILTER,RAD INTR 1750PF (81349) 241-5006-010 A4A1FL21	1	
21	FL38GW1ED3-0001	2	FILTER,RAD INTR 1750PF (81349) 241-5006-010 A4A1FL17	1	
22	FL38GW1ED3-0001	2	FILTER,RAD INTR 1750PF (81349) 241-5006-010 A4A1FL15	1	
23	FL38GW1ED3-0001	2	FILTER,RAD INTR 1750PF (81349) 241-5006-010 A4A1FL12	1	
24	FL38GW1ED3-0001	2	FILTER,RAD INTR 1750PF (81349) 241-5006-010 A4A1FL10	1	
25	M39012-67-0003	2	CONNECTOR,PLUG ELEC (81349) 357-7322-010 A4A1P3	1	
26	635-8508-001	2	BRACKET, FILTER	1	
	MS51957-14	2	SCREW,MACH SST, 4-40 X 5/16 (96906) 343-0134-000 (AP)	3	
	310-0278-000	2	WASHER,LOCK SST, 0.115 ID X 0.202 OD (70318) (AP)	3	
	4007-4HT	2	TERMINAL,LUG (77147) 304-0015-000 (AP)	2	
	310-6340-000	2	WASHER,FLAT SST, 0.125 ID X 0.281 OD (79807) (AP)	3	
27	504-9478-002	3	NUT, ANGLE	3	
28	A1444BRSHT	3	EYELET,MTLC BRS, 0.144DIA X 0.094 (57771) 307-1217-000	2	
29	635-8508-002	3	BRACKET	1	
30	637-2720-001	2	REGULATOR/DIVIDER BOARD (ESDS) A4A1A1 (SEE FIG 15)	1	

GROUP ASSEMBLY PARTS LIST

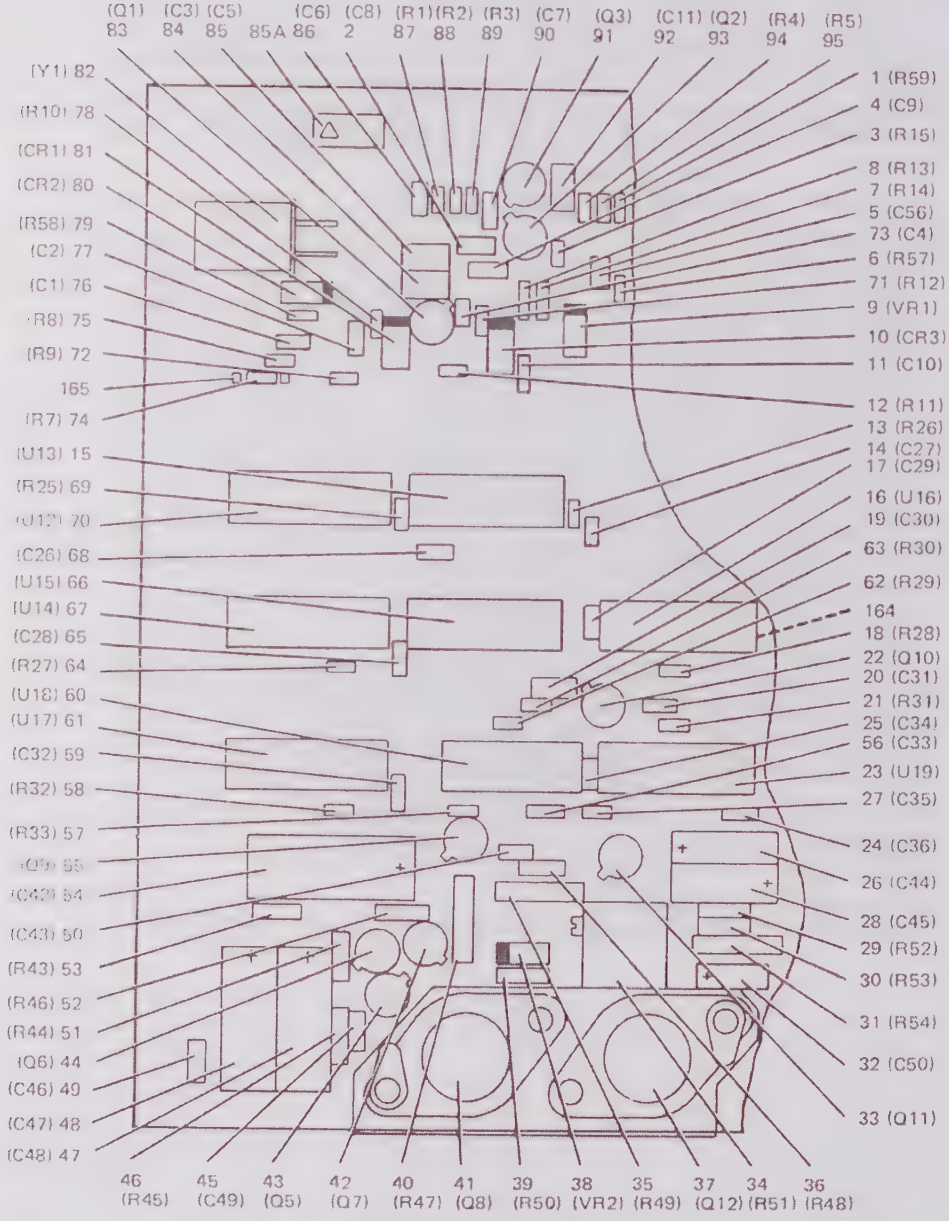

TP5-5350-029

Regulator/Divider Board A4A1A1
Figure 15 (Sheet 1 of 2)

GROUP ASSEMBLY PARTS LIST

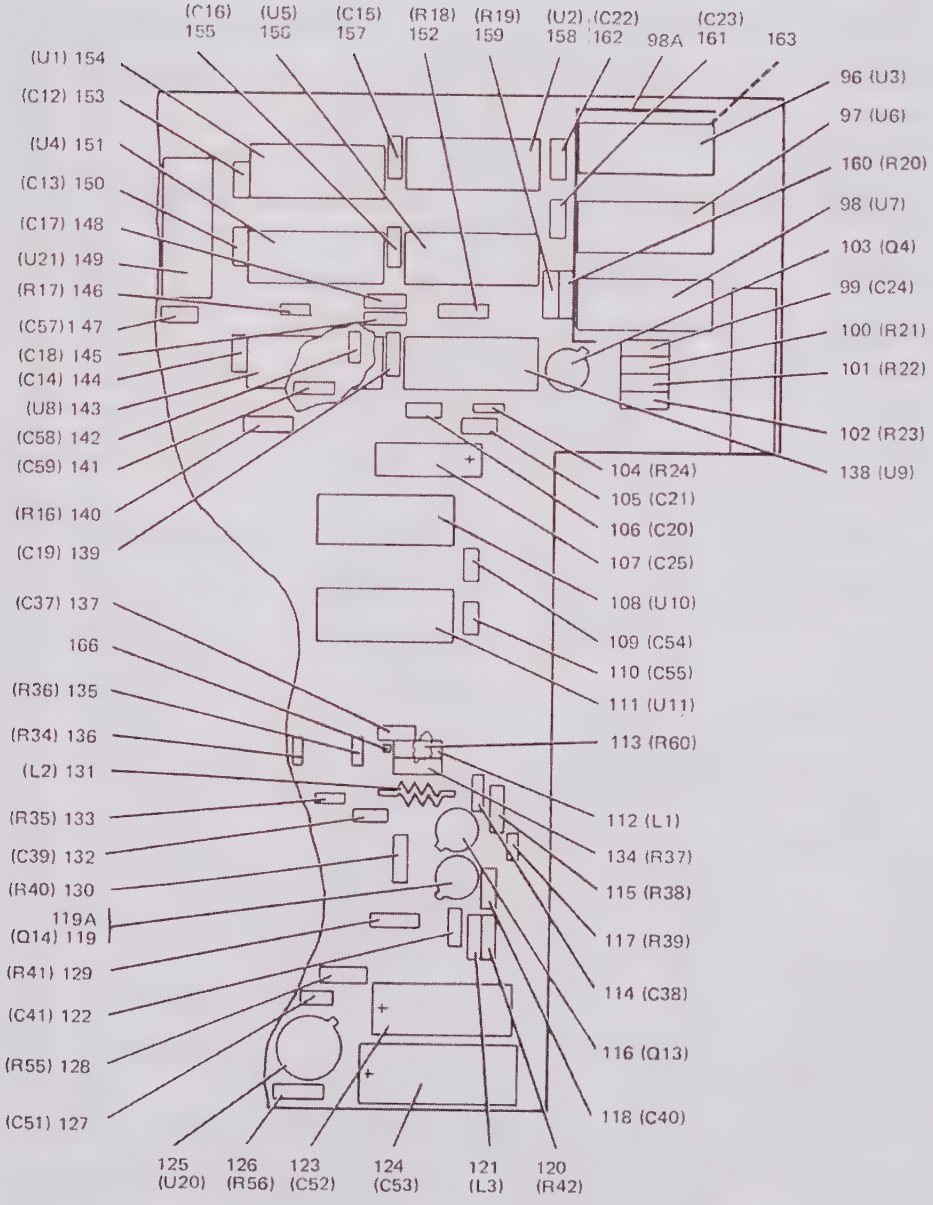

TP5-5350-029

Regulator/Divider Board A1A1A1
Figure 15 (Sheet 2)

GROUP ASSEMBLY PARTS LIST

FIG-ITEM	PART NO	INDENT	DESCRIPTION	UNITS PER ASSY	USABLE ON CODE
15-	637-2720-001	1	REGULATOR/DIVIDER BOARD (ESDS) A4A1A1 (SEE FIG 14-30 FOR NHA)	REF	
1	RCR05G331KS	2	RESISTOR,FXD CMPSN, 330 OHMS, 10%, 1/8W (81349) 745-2323-000 A4A1A1R59	1	
2	CK05BX102K	2	CAPACITOR,FXD CER DIEL, 1000PF, 10%, 200V (81349) 913-4018-000 A4A1A1C8	1	
3	RCR05G222KS	2	RESISTOR,FXD CMPSN, 2.2K, 10%, 1/8W (81349) 745-2353-000 A4A1A1R15	1	
4	DM5E510J050WV	2	CAPACITOR,FXD MICA DIEL, 51PF, 5%, 50V (72136) 912-4141-300 A4A1A1C9	1	
5	CK05BX102K	2	CAPACITOR,FXD CER DIEL, 1000PF, 10%, 200V (81349) 913-4018-000 A4A1A1C56	1	
6	RCR05G102KS	2	RESISTOR,FXD CMPSN, 1K, 10%, 1/8W (81349) 745-2341-000 A4A1A1R57	1	
7	RCR05G103KS	2	RESISTOR,FXD CMPSN, 10K, 10%, 1/8W (81349) 745-2377-000 A4A1A1R14	1	
8	RCR05G103KS	2	RESISTOR,FXD CMPSN, 10K, 10%, 1/8W (81349) 745-2377-000 A4A1A1R13	1	
9	JAN1N963B	2	SEMICOND DEVICE (81349) 353-3085-000 A4A1A1VR1	1	
10	MV1401	2	SEMICOND DEVICE (04713) 922-6100-040 A4A1A1CR3	1	
11	CK06BX104K	2	CAPACITOR,FXD CER DIEL, 0.1UF, PCRM10%, 100V (81349) 913-5019-440 A4A1A1C10	1	
12	RCR05G432JS	2	RESISTOR,FXD CMPSN, 4.3K, 5%, 1/8W (81349) 745-1863-640 A4A1A1R11	1	
13	RCR05G102KS	2	RESISTOR,FXD CMPSN, 1K, 10%, 1/8W (81349) 745-2341-000 A4A1A1R26	1	
14	CK05BX102K	2	CAPACITOR,FXD CER DIEL, 1000PF, 10%, 200V (81349) 913-4018-000 A4A1A1C27	1	
15	SN74LS191N	2	INTEGRATED CIRCUIT (ESDS) (34335) 351-1527-030 A4A1A1U13	1	
16	SN74LS190N	2	INTEGRATED CIRCUIT (ESDS) (34335) 351-1527-040 A4A1A1U16	1	
17	CK05BX102K	2	CAPACITOR,FXD CER DIEL, 1000PF, 10%, 200V (81349) 913-4018-000 A4A1A1C29	1	
18	RCR05G102KS	2	RESISTOR,FXD CMPSN, 1K, 10%, 1/8W (81349) 745-2341-000 A4A1A1R28	1	
19	DM5E510J050WV	2	CAPACITOR,FXD MICA DIEL, 51PF, 5%, 50V (72136) 912-4141-300 A4A1A1C30	1	
20	CK06BX104K	2	CAPACITOR,FXD CER DIEL, 0.1UF, PCRM10%, 100V (81349) 913-5019-440 A4A1A1C31	1	
21	RCR05G331KS	2	RESISTOR,FXD CMPSN, 330 OHMS, 10%, 1/8W (81349) 745-2323-000 A4A1A1R31	1	
22	2N918	2	TRANSISTOR (07910) 352-0440-000 A4A1A1Q10	1	
23	11C90DC	2	INTEGRATED CIRCUIT (07263) 351-1653-020 A4A1A1U19 (EFF TO REV LTR M)	1	
23	11C90DC	2	INTEGRATED CIRCUIT (07263) 351-1653-040 A4A1A1U19 (EFF REV LTR M)	1	
24	CK05BX471K	2	CAPACITOR,FXD CER DIEL, 470PF, 10%, 200V (81349) 913-4014-000 A4A1A1C36	1	
25	CK05BX471K	2	CAPACITOR,FXD CER DIEL, 470PF, 10%, 200V (81349) 913-4014-000 A4A1A1C34	1	
26	M39003-01-2289	2	CAPACITOR,FXD ELCTLT, 15UF, 10%, 20V (81349) 184-9086-490 A4A1A1C44	1	
27	CK05BX471K	2	CAPACITOR,FXD CER DIEL, 470PF, 10%, 200V (81349) 913-4014-000 A4A1A1C35	1	
28	M39003-01-2304	2	CAPACITOR,FXD ELCTLT, 6.8UF, 10%, 35V (81349) 184-9086-640 A4A1A1C45	1	
29	RN55D2261F	2	RESISTOR,FXD FILM, 2.26K, 1%, 1/8W (81349) 705-1013-000 A4A1A1R52	1	
30	RN55D3321F	2	RESISTOR,FXD FILM, 3.32K, 1%, 1/8W (81349) 705-1021-000 A4A1A1R53	1	
31	RW70U1R47F	2	RESISTOR,FXD 1.47 OHMS, 1%, 1.25W (81349) 747-4230-170 A4A1A1R54	1	

GROUP ASSEMBLY PARTS LIST

FIG-ITEM	PART NO	INDENT	DESCRIPTION	UNITS PER ASSY	USABLE ON CODE
15-32	M39003-01-2254	2	CAPACITOR,FXD ELCTLT, 4.7UF, 10%, 10V (81349) 184-9086-140 A4A1A1C50	1	
33	2N2907A	2	TRANSISTOR (15818) 352-0551-010 A4A1A1Q11	1	
34	RT22C2P501	2	RESISTOR,VAR WW, 500 OHMS, PORM5%, 3/4W (81349) 381-1721-030 A4A1A1R51	1	
35	RW70U5620F	2	RESISTOR,FXD 562 OHMS, 1%, 1.25W (81349) 747-4232-700 A4A1A1R49	1	
36	RCR07G103KS	2	RESISTOR,FXD CMPSN, 10K, 10%, 1/4W (81349) 745-0785-000 A4A1A1R48	1	
37	2N3879	2	TRANSISTOR (02735) 352-0704-020 A4A1A1Q12	1	
	P313-0132-000	2	NUT,PLAIN,HEX SST, 4-40 (77250) 313-0132-000 (AP)	2	
	MS35338-135	2	WASHER,LOCK SST, 0.115 ID X 0.209 OD (96906) 310-0279-000 (AP)	2	
	310-6340-000	2	WASHER,FLAT SST, 0.125 ID X 0.281 OD (79807) (AP)	3	
	4007-4HT	2	TERMINAL,LUG (77147) 304-0015-000 (AP)	1	
	547-8177-015	2	INSULATOR (AP)	2	
	TA2402A	2	WASHER,MICA (08289) 352-9570-020 (AP)	1	
	MS51957-16	2	SCREW,MACH STL, 4-40 X 7/16 (96906) 343-0136-000 (AP)	2	
38	1N754A	2	SEMICOND DEVICE (07263) 353-2716-000 A4A1A1VR2	1	
39	RN55D2871F	2	RESISTOR,FXD FILM, 2.87K, 1%, 1/8W (81349) 705-1018-000 A4A1A1R50	1	
40	RW70U1R96F	2	RESISTOR,FXD 1.96 OHMS, 1%, 1.25W (81349) 747-4230-290 A4A1A1R47 (EFF TO REV LTR L)	1	
40	RW70U1R33F	2	RESISTOR,FXD 1.33 OHMS, 1%, 1.25W (81349) 747-4230-130 A4A1A1R47 (EFF REV LTR L) (SB3)	1	
41	2N3879	2	TRANSISTOR (02735) 352-0704-020 A4A1A1Q8		
	P313-0132-000	2	NUT,PLAIN,HEX SST, 4-40 (77250) 313-0132-000 (AP)	2	
	MS35338-135	2	WASHER,LOCK SST, 0.115 ID X 0.209 OD (96906) 310-0279-000 (AP)	2	
	310-6340-000	2	WASHER,FLAT SST, 0.125 ID X 0.281 OD (79807) (AP)	3	
	4007-4HT	2	TERMINAL,LUG (77147) 304-0015-000 (AP)	1	
	TA2402A	2	WASHER,MICA (08289) 352-9570-020 (AP)	1	
	623-4546-001	2	HEATSINK (AP)	1	
	547-8177-015	2	BUSHING, INSUL (AP)	2	
	MS51957-16	2	SCREW,MACH STL, 4-40 X 7/16 (96906) 343-0136-000 (AP)	2	
42	2N2222A	2	TRANSISTOR (07263) 352-0661-020 A4A1A1Q7	1	
43	2N2222A	2	TRANSISTOR (07263) 352-0661-020 A4A1A1Q5	1	
44	2N2907A	2	TRANSISTOR (15818) 352-0551-010 A4A1A1Q6	1	
45	CK06BX104K	2	CAPACITOR,FXD CER DIEL, 0.1UF, PORM10%, 100V (81349) 913-5019-440 A4A1A1C49	1	
46	RCR07G151KS	2	RESISTOR,FXD CMPSN, 150 OHMS, 10%, 1/4W (81349) 745-0719-000 A4A1A1R45	1	
47	M39003-01-2306	2	CAPACITOR,FXD ELCTLT, 22UF, 10%, 35V (81349) 184-9086-660 A4A1A1C48	1	
48	M39003-01-2306	2	CAPACITOR,FXD ELCTLT, 22UF, 10%, 35V (81349) 184-9086-660 A4A1A1C47	1	
49	CK06BX104K	2	CAPACITOR,FXD CER DIEL, 0.1UF, PORM10%, 100V (81349) 913-5019-440 A4A1A1C46	1	
50	CK05BX102K	2	CAPACITOR,FXD CER DIEL, 1000PF, 10%, 200V (81349) 913-4018-000 A4A1A1C43	1	
51	RCR07G151KS	2	RESISTOR,FXD CMPSN, 150 OHMS, 10%, 1/4W (81349) 745-0719-000 A4A1A1R44	1	
52	RCR07G271KS	2	RESISTOR,FXD CMPSN, 270 OHMS, 10%, 1/4W (81349) 745-0728-000 A4A1A1R46	1	
53	RCR07G681KS	2	RESISTOR,FXD CMPSN, 680 OHMS, 10%, 1/4W (81349) 745-0743-000 A4A1A1R43	1	
54	M39003-01-2312	2	CAPACITOR,FXD ELCTLT, 47UF, 10%, 35V (81349) 184-9086-720 A4A1A1C42	1	
55	2N2222A	2	TRANSISTOR (07263) 352-0661-020 A4A1A1Q9	1	
56	CK06BX104K	2	CAPACITOR,FXD CER DIEL, 0.1UF, PORM10%, 100V (81349) 913-5019-440 A4A1A1C33	1	
57	RCR05G102KS	2	RESISTOR,FXD CMPSN, 1K, 10%, 1/8W (81349) 745-2341-000 A4A1A1R33	1	

GROUP ASSEMBLY PARTS LIST

FIG-ITEM	PART NO	INDENT	DESCRIPTION	UNITS PER ASSY	USABLE ON CODE
15-58	RCR05G102KS	2	RESISTOR,FXD CMPSN, 1K, 10%, 1/8W (81349) 745-2341-000 A4A1A1R32	1	
59	CK05BX103K	2	CAPACITOR,FXD CER DIEL, 1000PF, 10%, 200V (81349) 913-4018-000 A4A1A1C32	1	
60	SN54S74J	2	INTEGRATED CIRCUIT (01295) 351-1656-010 A4A1A1U18	1	
61	SN74LS191N	2	INTEGRATED CIRCUIT (ESDS) (34335) 351-1527-030 A4A1A1U17	1	
62	RCR05G391JS	2	RESISTOR,FXD CMPSN, 390 OHMS, 5%, 1/8W (81349) 745-1863-390 A4A1A1R29	1	
63	RCR05G221JS	2	RESISTOR,FXD CMPSN, 220 OHMS, 5%, 1/8W (81349) 745-1863-330 A4A1A1R30	1	
64	RCR05G102KS	2	RESISTOR,FXD CMPSN, 1K, 10%, 1/8W (81349) 745-2341-000 A4A1A1R27	1	
65	CK05BX103K	2	CAPACITOR,FXD CER DIEL, 1000PF, 10%, 200V (81349) 913-4018-000 A4A1A1C28	1	
66	MC12014P	2	INTEGRATED CIRCUIT (04713) 351-1503-010 A4A1A1U15	1	
67	SN74LS190N	2	INTEGRATED CIRCUIT (ESDS) (34335) 351-1527-040 A4A1A1U14	1	
68	CK05BX102K	2	CAPACITOR,FXD CER DIEL, 1000PF, 10%, 200V (81349) 913-4018-000 A4A1A1C26	1	
69	RCR05G102KS	2	RESISTOR,FXD CMPSN, 1K, 10%, 1/8W (81349) 745-2341-000 A4A1A1R25	1	
70	SN74LS190N	2	INTEGRATED CIRCUIT (ESDS) (34335) 351-1527-040 A4A1A1U12	1	
71	RCR05G104JS	2	RESISTOR,FXD CMPSN, 100K, 5%, 1/8W (81349) 745-1864-010 A4A1A1R12	1	
72	RCR05G104JS	2	RESISTOR,FXD CMPSN, 100K, 5%, 1/8W (81349) 745-1864-010 A4A1A1R9	1	
73	CK05BX103K	2	CAPACITOR,FXD CER DIEL, 0.01UF, PORM10%, 100V (81349) 913-5019-200 A4A1A1C4	1	
	638-1123-001	2	RESISTOR KIT (NON-PROCURABLE ITEM)	1	
74	RN55D4642F	3	RESISTOR,FXD FILM, 46.4K, 1%, 1/8W (81349) 705-1076-000 A4A1A1R7	AR	
74	RN55D4872F	3	RESISTOR,FXD FILM, 48.7K, 1%, 1/8W (81349) 705-1077-000 A4A1A1R7	AR	
74	RN55D5112F	3	RESISTOR,FXD FILM, 51.1K, 1%, 1/8W (81349) 705-1078-000 A4A1A1R7	AR	
74	RN55D5362F	3	RESISTOR,FXD FILM, 53.6K, 1%, 1/8W (81349) 705-1079-000 A4A1A1R7	AR	
74	RN55D5622F	3	RESISTOR,FXD FILM, 56.2K, 1%, 1/8W (81349) 705-1080-000 A4A1A1R7	AR	
74	RN55D5902F	3	RESISTOR,FXD FILM, 59K, 1%, 1/8W (81349) 705-1081-000 A4A1A1R7	AR	
74	RN55D6192F	3	RESISTOR,FXD FILM, 61.9K, 1%, 1/8W (81349) 705-1082-000 A4A1A1R7	AR	
74	RN55D6492F	3	RESISTOR,FXD FILM, 64.9K, 1%, 1/8W (81349) 705-1083-000 A4A1A1R7	AR	
74	RN55D6812F	3	RESISTOR,FXD FILM, 68.1K, 1%, 1/8W (81349) 705-1084-000 A4A1A1R7	AR	
74	RN55D7152F	3	RESISTOR,FXD FILM, 71.5K, 1%, 1/8W (81349) 705-1085-000 A4A1A1R7	AR	
74	RN55D7502F	3	RESISTOR,FXD FILM, 75K, 1%, 1/8W (81349) 705-1086-000 A4A1A1R7	AR	
74	RN55D7872F	3	RESISTOR,FXD FILM, 78.7K, 1%, 1/8W (81349) 705-1087-000 A4A1A1R7	AR	
74	RN55D8252F	3	RESISTOR,FXD FILM, 82.5K, 1%, 1/8W (81349) 705-1088-000 A4A1A1R7	AR	
74	RN55D8662F	3	RESISTOR,FXD FILM, 86.6K, 1%, 1/8W (81349) 705-1089-000 A4A1A1R7	AR	
74	RN55D9092F	3	RESISTOR,FXD FILM, 90.9K, 1%, 1/8W (81349) 705-1090-000 A4A1A1R7	AR	
74	RN55D9532F	3	RESISTOR,FXD FILM, 95.3K, 1%, 1/8W (81349) 705-1091-000 A4A1A1R7	AR	

GROUP ASSEMBLY PARTS LIST

FIG-ITEM	PART NO	INDENT	DESCRIPTION	UNITS PER ASSY	USABLE ON CODE
15-74	RN55D1003F	3	RESISTOR,FXD FILM, 100K, 1%, 1/8W (81349) 705-1092-000 A4A1A1R7	AR	
74	RN55D1053F	3	RESISTOR,FXD FILM, 105K, 1%, 1/8W (81349) 705-1093-000 A4A1A1R7	AR	
74	RN55D1103F	3	RESISTOR,FXD FILM, 110K, 1%, 1/8W (81349) 705-1094-000 A4A1A1R7	AR	
75	RN55D1003F	2	RESISTOR,FXD FILM, 100K, 1%, 1/8W (81349) 705-1092-000 A4A1A1R8	1	
76	CK05BX103K	2	CAPACITOR,FXD CER DIEL, 0.01UF, PORM10%, 100V (81349) 913-5019-200 A4A1A1C1	1	
77	CK05BX103K	2	CAPACITOR,FXD CER DIEL, 0.01UF, PORM10%, 100V (81349) 913-5019-200 A4A1A1C2	1	
78	RCR05G104JS	2	RESISTOR,FXD CMPSN, 100K, 5%, 1/8W (81349) 745-1864-010 A4A1A1R10	1	
79	RCR05G104JS	2	RESISTOR,FXD CMPSN, 100K, 5%, 1/8W (81349) 745-1864-010 A4A1A1R58	1	
80	MV1401	2	SEMICOND DEVICE (04713) 922-6100-040 A4A1A1CR2	1	
81	MV1401	2	SEMICOND DEVICE (04713) 922-6100-040 A4A1A1CR1	1	
82	289-7261-020	2	CRYSTAL UNIT,QTZ 16.0MHZ (00136) A4A1A1Y1	1	
83	2N918	2	TRANSISTOR (07910) 352-0440-000 A4A1A1Q1	1	
84	DM5F301J050WV	2	CAPACITOR,FXD MICA DIEL, 300PF, 5%, 50V (72136) 912-4141-480 A4A1A1C3	1	
85	DM5F301J050WV	2	CAPACITOR,FXD MICA DIEL, 300PF, 5%, 50V (72136) 912-4141-480 A4A1A1C5	1	
85A	280-2745-010	2	LABEL,PRESS SENS (12998) (EFF REV LTR P)	1	
86	CK05BX102K	2	CAPACITOR,FXD CER DIEL, 1000PF, 10%, 200V (81349) 913-4018-000 A4A1A1C6	1	
87	RCR05G662JS	2	RESISTOR,FXD CMPSN, 6.2K, 5%, 1/8W (81349) 745-1863-680 A4A1A1R1	1	
88	RCR05G132JS	2	RESISTOR,FXD CMPSN, 1.3K, 5%, 1/8W (81349) 745-1863-520 A4A1A1R2	1	
89	RCR05G222KS	2	RESISTOR,FXD CMPSN, 2.2K, 10%, 1/8W (81349) 745-2353-000 A4A1A1R3	1	
90	CK05BX103K	2	CAPACITOR,FXD CER DIEL, 0.01UF, PORM10%, 100V (81349) 913-5019-200 A4A1A1C7	1	
91	2N2369A	2	TRANSISTOR (14433) 352-0596-030 A4A1A1Q3	1	
92	DM5F151J050WV	2	CAPACITOR,FXD MICA DIEL, 150PF, 5%, 50V (72136) 912-4141-400 A4A1A1C11	1	
93	2N2369A	2	TRANSISTOR (14433) 352-0596-030 A4A1A1Q2	1	
94	RCR05G103KS	2	RESISTOR,FXD CMPSN, 10K, 10%, 1/8W (81349) 745-2377-000 A4A1A1R4	1	
95	RCR05G103KS	2	RESISTOR,FXD CMPSN, 10K, 10%, 1/8W (81349) 745-2377-000 A4A1A1R5	1	
96	N74LS00N	2	INTEGRATED CIRCUIT LOGIC GATE (18324) 351-1523-110 A4A1A1U3	1	
97	SN54LS93J	2	INTEGRATED CIRCUIT (ESDS) (01295) 351-1738-010 A4A1A1U6	1	
98	SN54LS93J	2	INTEGRATED CIRCUIT (ESDS) (01295) 351-1738-010 A4A1A1U7	1	
98A	647-4013-001	2	SHIELD, RF (EFF REV LTR N) (SB9)	1	
99	CK05BX102K	2	CAPACITOR,FXD CER DIEL, 1000PF, 10%, 200V (81349) 913-4018-000 A4A1A1C24	1	
100	RN55D4640F	2	RESISTOR,FXD FILM, 464 OHMS, 1%, 1/8W (81349) 705-0980-000 A4A1A1R21	1	
101	RN55D4421F	2	RESISTOR,FXD FILM, 4.42K, 1%, 1/8W (81349) 705-1027-000 A4A1A1R22	1	
102	RN55D2051F	2	RESISTOR,FXD FILM, 2.05K, 1%, 1/8W (81349) 705-1011-000 A4A1A1R23	1	
103	2N2369A	2	TRANSISTOR (14433) 352-0596-030 A4A1A1Q4	1	
104	RCR05G102KS	2	RESISTOR,FXD CMPSN, 1K, 10%, 1/8W (81349) 745-2341-000 A4A1A1R24	1	
105	CK05BX102K	2	CAPACITOR,FXD CER DIEL, 1000PF, 10%, 200V (81349) 913-4018-000 A4A1A1C21	1	

GROUP ASSEMBLY PARTS LIST

FIG-ITEM	PART NO	INDENT	DESCRIPTION	UNITS PER ASSY	USABLE ON CODE
15-106	CK05BX102K	2	CAPACITOR,FXD CER DIEL, 1000PF, 10%, 200V (81349) 913-4018-000 A4A1A1C20	1	
107	M39003-01-2304	2	CAPACITOR,FXD ELCTLT, 6.8UF, 10%, 35V (81349) 184-9086-640 A4A1A1C25	1	
108	DM74LS02N	2	INTEGRATED CIRCUIT LOGIC GATE (27014) 351-1523-220 A4A1A1U10	1	
109	CK05BX102K	2	CAPACITOR,FXD CER DIEL, 1000PF, 10%, 200V (81349) 913-4018-000 A4A1A1C54	1	
110	CK05BX102K	2	CAPACITOR,FXD CER DIEL, 1000PF, 10%, 200V (81349) 913-4018-000 A4A1A1C55	1	
111	N74LS08N	2	INTEGRATED CIRCUIT LOGIC GATE (18324) 351-1523-120 A4A1A1U11	1	
112	MS75084-07	2	COIL,RF 3.90UH (96906) 240-2030-000 A4A1A1L1	1	
113	RCP07G910JS	2	RESISTOR,FXD CMPSN, 91 OHMS, 5%, 1/4W (81349) 745-0711-000 A4A1A1R60	1	
114	CK05BX471K	2	CAPACITOR,FXD CER DIEL, 470PF, 10%, 200V (81349) 913-4014-000 A4A1A1C38	1	
115	RCR07G331JS	2	RESISTOR,FXD CMPSN, 330 OHMS, 5%, 1/4W (81349) 745-0730-000 A4A1A1R33	1	
116	2N918	2	TRANSISTOR (07910) 352-0440-000 A4A1A1Q13	1	
117	RCR05G201JS	2	RESISTOR,FXD CMPSN, 200 OHMS, 5%, 1/8W (81349) 745-1863-320 A4A1A1R39	1	
118	DM5E300J050WV	2	CAPACITOR,FXD MICA DIEL, 30PF, 5%, 50V (72136) 912-4141-200 A4A1A1C40	1	
119	2N918	2	TRANSISTOR (07910) 352-0440-000 A4A1A1Q14	1	
119A	7717-198N	2	INSULATOR,DISK (32559) 352-9552-580	4	
120	RCR05G510JS	2	RESISTOR,FXD CMPSN, 51 OHMS, 5%, 1/8W (81349) 745-1863-180 A4A1A1R42	1	
121	MS75083-03	2	COIL,RF 0.15UH (96906) 240-2013-000 A4A1A1L3	1	
122	CK05BX471K	2	CAPACITOR,FXD CER DIEL, 470PF, 10%, 200V (81349) 913-4014-000 A4A1A1C41	1	
123	M39003-01-2274	2	CAPACITOR,FXD ELCTLT, 68UF, 10%, 15V (81349) 184-9086-340 A4A1A1C52	1	
124	M39003-01-2312	2	CAPACITOR,FXD ELCTLT, 47UF, 10%, 35V (81349) 184-9086-720 A4A1A1C53	1	
125	RM723T	2	INTEGRATED CIRCUIT V RGLTR (49956) 351-1035-010 A4A1A1U20	1	
126	RCP07G271KS	2	RESISTOR,FXD CMPSN, 270 OHMS, 10%, 1/4W (81349) 745-0728-000 A4A1A1R56	1	
127	CK05BX102K	2	CAPACITOR,FXD CER DIEL, 1000PF, 10%, 200V (81349) 913-4018-000 A4A1A1C51	1	
128	RCR07G152JS	2	RESISTOR,FXD CMPSN, 1.5K, 5%, 1/4W (81349) 745-0754-000 A4A1A1R55	1	
129	RCR07G221KS	2	RESISTOR,FXD CMPSN, 220 OHMS, 10%, 1/4W (81349) 745-0725-000 A4A1A1R41	1	
130	RCR07G331JS	2	RESISTOR,FXD CMPSN, 330 OHMS, 5%, 1/4W (81349) 745-0730-000 A4A1A1R40	1	
131	618-7342-007	2	COIL A4A1A1L4	1	
132	DM5E330J050WV	2	CAPACITOR,FXD MICA DIEL, 33PF, 5%, 50V (72136) 912-4141-220 A4A1A1C39	1	
133	RCR05G120JS	2	RESISTOR,FXD CMPSN, 12 OHMS, 5%, 1/8W (81349) 745-1863-030 A4A1A1R35	1	
134	RCR07G511JS	2	RESISTOR,FXD CMPSN, 510 OHMS, 5%, 1/4W (81349) 745-0738-000 A4A1A1R37	1	
135	RCR05G431JS	2	RESISTOR,FXD CMPSN, 430 OHMS, 5%, 1/8W (81349) 745-1863-400 A4A1A1R36	1	
136	RCR05G431JS	2	RESISTOR,FXD CMPSN, 430 OHMS, 5%, 1/8W (81349) 745-1863-400 A4A1A1R34	1	
137	CK05BX471K	2	CAPACITOR,FXD CER DIEL, 470PF, 10%, 200V (81349) 913-4014-000 A4A1A1C37	1	
138	SN74LS74AN	2	INTEGRATED CIRCUIT FLIP FLOP (04713) 351-1525-040 A4A1A1U9	1	

GROUP ASSEMBLY PARTS LIST

FIG-ITEM	PART NO	INDENT	DESCRIPTION	UNITS PER ASSY	USABLE ON CODE
15-139	CK05BX102K	2	CAPACITOR,FXD CER DIEL, 1000PF, 10%, 200V (81349) 913-4018-000 A4A1A1C19	1	
140	RCR07G681KS	2	RESISTOR,FXD CMPSN, 680 OHMS, 10%, 1/4W (81349) 745-0743-000 A4A1A1R16	1	
141	DM5F101J050WV	2	CAPACITOR,FXD MICA DIEL, 100PF, 5%, 50V (72136) 912-4141-050 A4A1A1C59	1	
142	DM5F101J050WV	2	CAPACITOR,FXD MICA DIEL, 100PF, 5%, 50V (72136) 912-4141-050 A4A1A1C58	1	
143	SN74LS74AN	2	INTEGRATED CIRCUIT FLIP FLOP (04713) 351-1525-040 A4A1A1U8	1	
144	CK05BX102K	2	CAPACITOR,FXD CER DIEL, 1000PF, 10%, 200V (81349) 913-4018-000 A4A1A1C14	1	
145	CK05BX102K	2	CAPACITOR,FXD CER DIEL, 1000PF, 10%, 200V (81349) 913-4018-000 A4A1A1C18	1	
146	RCR05G102KS	2	RESISTOR,FXD CMPSN, 1K, 10%, 1/8W (81349) 745-2341-000 A4A1A1R17	1	
147	CK05BX102K	2	CAPACITOR,FXD CER DIEL, 1000PF, 10%, 200V (81349) 913-4018-000 A4A1A1C57	1	
148	CK05BX102K	2	CAPACITOR,FXD CER DIEL, 1000PF, 10%, 200V (81349) 913-4018-000 A4A1A1C17	1	
149	SN74LS73AN	2	INTEGRATED CIRCUIT FLIP FLOP (04713) 351-1525-060 A4A1A1U21	1	
150	CK05BX102K	2	CAPACITOR,FXD CER DIEL, 1000PF, 10%, 200V (81349) 913-4018-000 A4A1A1C13	1	
151	N74LS00N	2	INTEGRATED CIRCUIT LOGIC GATE (18324) 351-1523-110 A4A1A1U4	1	
152	RCR07G102JS	2	RESISTOR,FXD CMPSN, 1K, 5%, 1/4W (81349) 745-0748-000 A4A1A1R18	1	
153	CK05BX102K	2	CAPACITOR,FXD CER DIEL, 1000PF, 10%, 200V (81349) 913-4018-000 A4A1A1C12	1	
154	SN54LS93J	2	INTEGRATED CIRCUIT (ESDS) (01295) 351-1738-010 A4A1A1U1	1	
155	CK05BX102K	2	CAPACITOR,FXD CER DIEL, 1000PF, 10%, 200V (81349) 913-4018-000 A4A1A1C16	1	
156	N74LS00N	2	INTEGRATED CIRCUIT LOGIC GATE (18324) 351-1523-110 A4A1A1U5	1	
157	CK05BX102K	2	CAPACITOR,FXD CER DIEL, 1000PF, 10%, 200V (81349) 913-4018-000 A4A1A1C15	1	
158	SN74LS90N	2	INTEGRATED CIRCUIT (01295) 351-1636-010 A4A1A1U2	1	
159	RCR07G102JS	2	RESISTOR,FXD CMPSN, 1K, 5%, 1/4W (81349) 745-0748-000 A4A1A1R19	1	
160	RCR07G332JS	2	RESISTOR,FXD CMPSN, 3.3K, 5%, 1/4W (81349) 745-0766-000 A4A1A1R20	1	
161	CK05BX102K	2	CAPACITOR,FXD CER DIEL, 1000PF, 10%, 200V (81349) 913-4018-000 A4A1A1C23	1	
162	CK05BX102K	2	CAPACITOR,FXD CER DIEL, 1000PF, 10%, 200V (81349) 913-4018-000 A4A1A1C22	1	
163	TSW3800-14BW	2	SOCKET,IC (23880) 220-0075-020 (EFF TO REV LTR K)	11	
164	TSW3800-16BW	2	SOCKET,IC (23880) 220-0075-030 (EFF TO REV LTR K)	6	
165	372-2601-027	2	CONTACT,ELEC	21	
166	372-2601-063	2	CONTACT,ELEC	2	

GROUP ASSEMBLY PARTS LIST

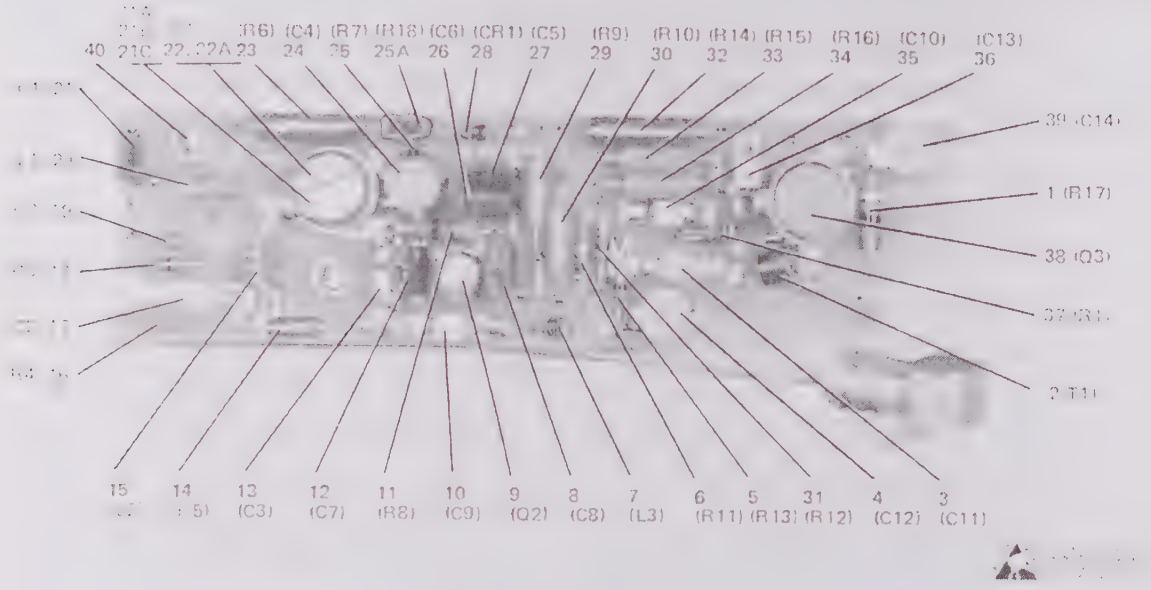

Output Amplifier Board A4A2
Figure 16

FIG-ITEM	PART NO	INDENT	DESCRIPTION	UNITS PER ASSY	USABLE ON CODE
16-	637-2718-001	1	OUTPUT AMPLIFIER BOARD A4A2 (SEE FIG 13-18 FOR NHA)	REF	
1	RCR07G510JS	2	RESISTOR,FXD CMPSN, 51 OHMS, 5%, 1/4W (81349) 745-0702-000 A4A2R17 (EFF TO REV LTR D)	1	
1	RCR07G101JS	2	RESISTOR,FXD CMPSN, 100 OHMS, 5%, 1/4W (81349) 745-0712-000 A4A2R17 (EFF REV LTR D)	1	
2	635-8680-001	2	TRANSFORMER A4A2T1	1	
3	471KMSX200	2	CAPACITOR,FXD CER DIEL, 470PF, 10%, 100V (29990) 914-3098-640 A4A2C11	1	
4	518-024A3-5-20PF	2	CAPACITOR,VAR CER DIEL, 3.5 TO 20PF, 100V (72982) 917-1256-020 A4A2C12	1	
5	RCR05G180JS	2	RESISTOR,FXD CMPSN, 18 OHMS, 5%, 1/8W (81349) 745-1863-070 A4A2R13	1	
6	RCR05G301JS	2	RESISTOR,FXD CMPSN, 300 OHMS, 5%, 1/8W (81349) 745-1863-360 A4A2R11	1	
7	623-0741-001	2	COIL A4A2L3	1	
8	CK05BX102K	2	CAPACITOR,FXD CER DIEL, 1000PF, 10%, 200V (81349) 913-4018-000 A4A2C8	1	
9	2N2907A	2	TRANSISTOR (15818) 352-0551-010 A4A2Q2	1	
10	471KMSX200	2	CAPACITOR,FXD CER DIEL, 470PF, 10%, 100V (29990) 914-3098-640 A4A2C9	1	
11	RCR07G102JS	2	RESISTOR,FXD CMPSN, 1K, 5%, 1/4W (81349) 745-0748-000 A4A2R8	1	
12	CK05BX102K	2	CAPACITOR,FXD CER DIEL, 1000PF, 10%, 200V (81349) 913-4018-000 A4A2C7	1	

GROUP ASSEMBLY PARTS LIST

FIG-ITEM	PART NO	INDENT	DESCRIPTION	UNITS PER ASSY	USABLE ON CODE
16-13	471KMSX200	2	CAPACITOR,FXD CER DIEL, 470PF, 10%, 100V (29990) 914-3098-640 A4A2C3	1	
14	RN55D2490F	2	RESISTOR,FXD FILM, 249 OHMS, 1%, 1/8W (81349) 705-0967-000 A4A2R5 (EFF TO REV LTR D)	1	
14	RN55D4120F	2	RESISTOR,FXD FILM, 412 OHMS, 1%, 1/8W (81349) 705-3600-780 A4A2R5 (EFF REV LTR D)	1	
15	623-0740-002	2	COIL A4A2L2	1	
16	RCR05G431JS	2	RESISTOR,FXD CMPSN, 430 OHMS, 5%, 1/8W (81349) 745-1863-400 A4A2R4	1	
17	471KMSX200	2	CAPACITOR,FXD CER DIEL, 470PF, 10%, 100V (29990) 914-3098-640 A4A2C2	1	
18	RCR05G120JS	2	RESISTOR,FXD CMPSN, 12 OHMS, 5%, 1/8W (81349) 745-1863-030 A4A2R3	1	
19	RCR05G431JS	2	RESISTOR,FXD CMPSN, 430 OHMS, 5%, 1/8W (81349) 745-1863-400 A4A2R2	1	
20	MS75084-08	2	COIL,RF 4.70UH (96906) 240-2031-000 A4A2L1	1	
21	CK05BX102K	2	CAPACITOR,FXD CER DIEL, 1000PF, 10%, 200V (81349) 913-4018-000 A4A2C1	1	
21A	634-9318-001	2	HEATSINK ASSEMBLY (EFF REV LTR D)	1	
21B	TX0522B	3	HEATSINK,ELEC (98978) 352-9555-050	1	
21C	634-9316-001	3	HEATSINK	1	
	MS51957-11	3	SCREW,MACH STL, 4-40 X 1/8 (96906) 343-0131-000 (AP FOR ITEM 21B-21C)	1	
22	SRF2263XRF525	2	TRANSISTOR,RF (04713) 352-1109-010 A4A2Q1	1	
22A	7717-15N	2	INSULATOR,DISK (13103) 352-9552-200 (EFF REV LTR E)	1	
23	RW70U2210F	2	RESISTOR,FXD 221 OHMS, 1%, 1.25W (81349) 747-4232-310 A4A2R6 (EFF TO REV LTR D)	1	
23	RW70U63R4F	2	RESISTOR,FXD WW, 63.4 OHMS, 1%, 1.25W (81349) 747-4231-780 A4A2R6 (EFF REV LTR D)	1	
24	518-024A5-25PF	2	CAPACITOR,VAR CER DIEL, 5 TO 25PF, 100V (72982) 917-1256-030 A4A2C4	1	
25	RCR05G100JS	2	RESISTOR,FXD CMPSN, 10 OHMS, 5%, 1/8W (81349) 745-1863-010 A4A2R7	1	
25A	RCR05G150JS	2	RESISTOR,FXD CMPSN, 15 OHMS, 5%, 1/8W (81349) 745-1863-050 A4A2R18 (EFF REV LTR D)	1	
26	CK05BX102K	2	CAPACITOR,FXD CER DIEL, 1000PF, 10%, 200V (81349) 913-4018-000 A4A2C6	1	
27	CK05BX102K	2	CAPACITOR,FXD CER DIEL, 1000PF, 10%, 200V (81349) 913-4018-000 A4A2C5	1	
28	1N4454GE	2	SEMICOND DEVICE (03508) 353-3644-010 A4A2CR1	1	
29	RN55D5111F	2	RESISTOR,FXD FILM, 5.11K, 1%, 1/8W (81349) 705-1030-000 A4A2R9 (EFF TO REV LTR D)	1	
29	RN55D1071F	2	RESISTOR,FXD FILM, 1.07K, 1%, 1/8W (81349) 705-3605-020 A4A2R9 (EFF REV LTR D)	1	
30	RN55D3161F	2	RESISTOR,FXD FILM, 3.16K, 1%, 1/8W (81349) 705-1020-000 A4A2R10	1	
31	RCR05G301JS	2	RESISTOR,FXD CMPSN, 300 OHMS, 5%, 1/8W (81349) 745-1863-360 A4A2R12	1	
32	RW70U2210F	2	RESISTOR,FXD 221 OHMS, 1%, 1.25W (81349) 747-4232-310 A4A2R14	1	
33	RN55D1651F	2	RESISTOR,FXD FILM, 1.65K, 1%, 1/8W (81349) 705-3605-100 A4A2R15	1	
34	RN55D6810F	2	RESISTOR,FXD FILM, 681 OHMS, 1%, 1/8W (81349) 705-0988-000 A4A2R16	1	
35	471KMSX200	2	CAPACITOR,FXD CER DIEL, 470PF, 10%, 100V (29990) 914-3098-640 A4A2C10	1	
36	471KMSX200	2	CAPACITOR,FXD CER DIEL, 470PF, 10%, 100V (29990) 914-3098-640 A4A2C13	1	
37	RCR05G241JS	2	RESISTOR,FXD CMPSN, 240 OHMS, 5%, 1/8W (81349) 745-1863-340 A4A2R1	1	
38	2N5109	2	TRANSISTOR (95445) 352-0766-010 A4A2Q3	1	
39	518-024A3-5-20PF	2	CAPACITOR,VAR CER DIEL, 3.5 TO 20PF, 100V (72982) 917-1256-020 A4A2C14	1	
40	635-8512-001	2	SPACER	3	

GROUP ASSEMBLY PARTS LIST

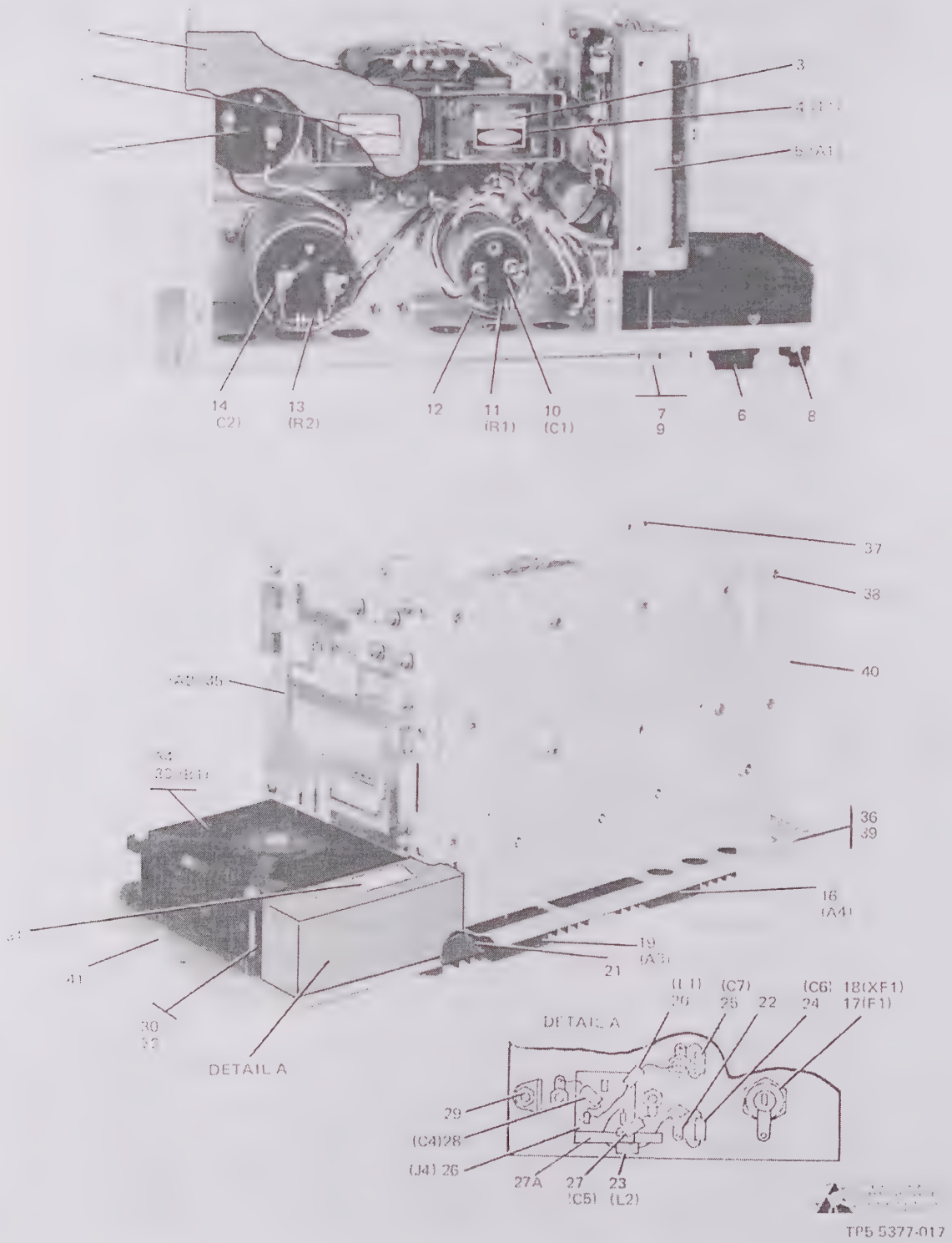

Power Supply Assembly A5
Figure 17

GROUP ASSEMBLY PARTS LIST

FIG-ITEM	PART NO	INDENT	DESCRIPTION	UNITS PER ASSY	USABLE ON CODE
17-	629-9770-002	1	POWER SUPPLY ASSY A5 (SEE FIG 1-5 FOR NHA)	REF	
1	629-9892-002	2	COVER	1	
	MS51957-27	2	SCREW,MACH SST, 6-32 X 5/16 (96906) 343-0168-000 (AP)	5	
	MS51959-27	2	SCREW,MACH SST, 6-32 X 5/16 (96906) 342-0061-000 (AP) (EFF REV LTR H)	1	
2	280-1368-060	2	LABEL,PRESSURE (12998)	1	
3	280-1368-070	2	LABEL,PRESSURE (12998)	1	
4	42525	2	TRANSFORMER (73386) 662-0636-010 A5T1	1	
	MS35649-284	2	NUT,PLAIN,HEX SST, 8-32 (96906) 313-0017-000 (AP)	3	
	MS35338-137	2	WASHER,LOCK SST, 0.168 ID X 0.296 OD (96906) 310-0072-000 (AP)	6	
	310-0048-000	2	WASHER,FLAT SST, 0.172 ID X 0.437 OD (79807) (AP)	3	
	MS51957-43	2	SCREW,MACH SST, 8-32 X 1-1/4 (96906) 343-0187-000 (AP)	3	
	MS51957-44	2	SCREW,MACH SST, 8-32 X 7/16 (96906) 343-0188-000 (AP)	3	
5	629-9889-002	2	POWER SUPPLY TERMINAL BOARD ASSEMBLY A5A1 (SEE FIG 18)	1	
	MS51959-27	2	SCREW,MACH SST, 6-32 X 5/16 (96906) 342-0061-000 (AP)	3	
	MS51957-27	2	SCREW,MACH SST, 6-32 X 5/16 (96906) 343-0168-000 (AP)	1	
6	629-9779-001	2	FILTER, AIR	1	
7	629-9778-001	2	HOUSING, FILTER	1	
	MS51959-13	2	SCREW,MACH SST, 4-40 X 1/4 (96906) 342-0044-000 (AP FOR 6, 7)	4	
8	R22NCFMA1-40	3	NUT,SLFLKG CD PL STL, 4-40 (72962) 333-0839-000	4	
9	629-9778-002	3	HOUSING, FILTER	1	
10	602D528A1	2	CAPACITOR,FXD AL ELCTLT, 9000UF, P75%M10%, 40V (56289) 183-1467-120 A5C1	1	
	115058-05	2	MOUNTING RINGS (00853) 139-0137-000 (AP)	1	
	68NM82	2	NUT,SLFLKG,HEX AL, 8-32 (72962) 333-0381-000 (AP)	2	
	MS51957-44	2	SCREW,MACH SST, 8-32 X 7/16 (96906) 343-0188-000 (AP)	2	
11	RCR42G102KS	2	RESISTOR,FXD CMPSN, 1K, 10%, 2W (81349) 745-5652-000 A5R1	1	
	MS51958-59	2	SCREW,MACH SST, 10-32 X 1/4 (96906) 343-0224-000 (AP)	2	
	MS35333-73	2	WASHER,LOCK SST, 0.204 ID X 0.381 OD (96906) 373-0043-000 (AP)	2	
	4021	2	TERMINAL,LUG (77147) 304-0087-000 (AP)	2	
12	911	2	GROMMET,RBR (75543) 201-1080-000	2	
13	RCR42G471KS	2	RESISTOR,FXD CMPSN, 470 OHMS, 10%, 2W (81349) 745-5638-000 A5R2	1	
	MS51958-61	2	SCREW,MACH SST, 10-32 X 3/8 (96906) 343-0226-000 (AP)	2	
	MS35333-73	2	WASHER,LOCK SST, 0.204 ID X 0.381 OD (96906) 373-0043-000 (AP)	2	
	4021	2	TERMINAL,LUG (77147) 304-0087-000 (AP)	2	
14	3110CC453V025	2	CAPACITOR,FXD ELCTLT, 45,000UF, M10%P100%, 25V (99392) 183-1464-280 A5C2	1	
	115058-10	2	MOUNTING RINGS (00853) 139-0138-000 (AP)	1	
	68NM82	2	NUT,SLFLKG,HEX AL, 8-32 (72962) 333-0381-000 (AP)	2	
	MS51957-44	2	SCREW,MACH SST, 8-32 X 7/16 (96906) 343-0188-000 (AP)	2	
15	3110CC453V025	2	CAPACITOR,FXD ELCTLT, 45,000UF, M10%P100%, 25V (99392) 183-1464-280 A5C3	1	
	115058-10	2	MOUNTING RINGS (00853) 139-0138-000 (AP)	1	
	68NM62	2	NUT,SLFLKG,HEX AL, 6-32 (72962) 333-0368-000 (AP)	2	
	MS51959-29	2	SCREW,MACH SST, 6-32 X 7/16 (96906) 342-0063-000 (AP)	2	
	MS51958-61	2	SCREW,MACH SST, 10-32 X 3/8 (96906) 343-0226-000 (AP)	2	
	MS35333-73	2	WASHER,LOCK SST, 0.204 ID X 0.381 OD (96906) 373-0043-000 (AP)	2	
16	629-9951-001	2	HEATSINK ASSY A5A4 (SEE FIG 20)	1	
	MS51957-28	2	SCREW,MACH SST, 6-32 X 3/8 (96906) 343-0169-000 (AP)	4	
17	F02A250V4AS	2	FUSE,CRTG (81349) 264-0449-000 A5F1	1	
18	HKPH	2	FUSEHOLDER (71400) 265-1171-000 A5XF1	1	
19	629-9950-001	2	HEATSINK ASSY A5A3 (SEE FIG 20)	1	
	MS51957-28	2	SCREW,MACH SST, 6-32 X 3/8 (96906) 343-0169-000 (AP)	4	
20	VK20020-4B	2	COIL,RF 0.85K, PORM20% (02114) 240-2679-040 A5L1	1	

GROUP ASSEMBLY PARTS LIST

FIG-ITEM	PART NO	INDENT	DESCRIPTION	UNITS PER ASSY	USABLE ON CODE
17-21	629-9915-001	2	PLATE-VOLTAGE	1	
21	P347-1268-000	2	SCREW,MACH SST, 2-56 X 1/8 (77250) 347-1268-000 (AP)	2	
22	2A1DB15	2	TERMINAL STDF (92825) 306-0234-000	2	
	MS51957-12	2	SCREW,MACH STL, 4-40 X 3/16 (96906) 343-0132-000 (AP)	2	
	MS35338-135	2	WASHER,LOCK SST, 0.115 ID X 0.209 OD (96906) 310-0279-000 (AP)	2	
	4007-4HT	2	TERMINAL,LUG (77147) 304-0015-000 (AP)	2	
23	VK20020-4B	2	COIL,RF 0.85K, PORM20% (02114) 240-2679-040 A5L2	1	
24	CK62AW472M	2	CAPACITOR,FXD CER DIEL, 4700PF, 20%, 500V (81349) 913-1187-000 A5C6	1	
25	CK62AW472M	2	CAPACITOR,FXD CER DIEL, 4700PF, 20%, 500V (81349) 913-1187-000 A5C7	1	
26	EAC301	2	CONNECTOR,RCPT ELEC (82389) 368-0385-010 A5J4	1	
	MS35649-244	2	NUT,PLAIN,HEX SST, 4-40 (96906) 313-0043-000 (AP)	4	
	310-6340-000	2	WASHER,FLAT SST, 0.125 ID X 0.281 OD (79807) (AP)	2	
	MS35338-135	2	WASHER,LOCK SST, 0.115 ID X 0.209 OD (96906) 310-0279-000 (AP)	4	
	4007-4HT	2	TERMINAL,LUG (77147) 304-0015-000 (AP)	2	
	MS51957-17	2	SCREW,MACH STL, 4-40 X 1/2 (96906) 343-0137-000 (AP)	2	
27	CK62AW472M	2	CAPACITOR,FXD CER DIEL, 4700PF, 20%, 500V (81349) 913-1187-000 A5C5	1	
27A	280-1368-070	2	LABEL,PRESSURE (12998) (EFF REV LTR J) (SB1)	1	
28	CK62AW472M	2	CAPACITOR,FXD CER DIEL, 4700PF, 20%, 500V (81349) 913-1187-000 A5C4	1	
29	403	2	TERMINAL,LUG (79963) 304-1089-000	1	
	P313-0045-000	2	NUT,PLAIN,HEX SST, 6-32 (77250) 313-0045-000 (AP)	1	
	MS35338-136	2	WASHER,LOCK SST, 0.141 ID X 0.250 OD (96906) 310-0282-000 (AP)	1	
	MS51957-27	2	SCREW,MACH SST, 6-32 X 5/16 (96906) 343-0168-000 (AP)	1	
30	629-9848-001	2	COVER, CONNECTOR	1	
31	280-1368-060	3	LABEL,PRESSURE (12998)	1	
32	629-9996-001	3	COVER	1	
33	028021	2	FAN,TUBEAXIAL (82877) 009-1766-020 A5B1	1	
34	476042	2	GUARD,FGR (82877) 009-1766-050	1	
	6S	2	NUT,RESILIENT BRS, 6-32 (04714) 334-1492-000 (AP FOR 33, 34)	4	
	P343-0183-000	2	SCREW,MACH SST, 6-32 X 2-1/4 (77250) 343-0183-000 (AP FOR 33, 34)	2	
	MS51957-38	2	SCREW,MACH SST, 6-32 X 2 (96906) 343-0182-000 (AP FOR 33, 34)	2	
35	601-5221-001	2	POWER SUPPLY PC BOARD ASSEMBLY A5A2 (SEE FIG 19)	1	
	MS51957-27	2	SCREW,MACH SST, 6-32 X 5/16 (96906) 343-0168-000 (AP)	3	
	MS51957-28	2	SCREW,MACH SST, 6-32 X 3/8 (96906) 343-0169-000 (AP)	2	
	310-0046-000	2	WASHER,FLAT SST, 0.147 ID X 0.312 OD (79807) (AP)	2	
36	629-9894-001	2	CHASSIS, POWER SUPPLY	1	
37	F12NCFMA2-62	3	NUT,SLFLKG CD PL STL, 6-32 (72962) 333-0842-000	10	
38	5S5-8	3	STUD,TURNLOCK FSTNR, CD PL STL, 0.128 DIA X 0.384 (71286) 012-3160-000	2	
	5S3-1	3	WASHER,SPLIT CD PL STL, 0.156 ID X 0.274 OD (71286) 012-2785-000 (AP)	2	
39	629-9894-002	3	CHASSIS	1	
40	629-9894-003	4	PLATE, REAR	1	
41	629-9894-004	4	FLOOR	1	

GROUP ASSEMBLY PARTS LIST

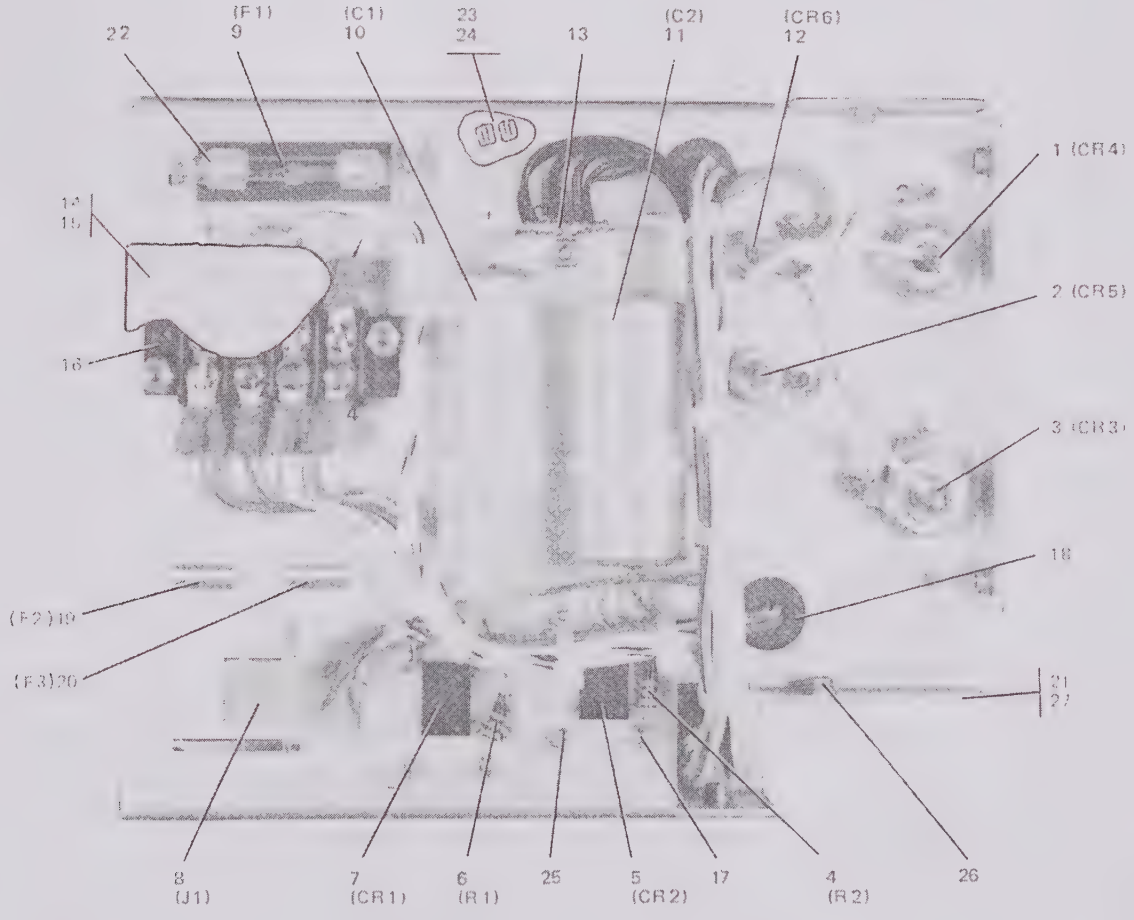

TP5-5393-017

Power Supply Terminal Board Assembly A5A1
Figure 18

GROUP ASSEMBLY PARTS LIST

FIG-ITEM	PART NO	INDENT	DESCRIPTION	UNITS PER ASSY	USABLE ON CODE
18-	629-9889-002	1	POWER SUPPLY TERMINAL BOARD ASSEMBLY A5A1 (SEE FIG 17-5 FOR NHA)	REF	
1	1N1192	2	SEMICOND DEVICE (05277) 353-1572-000 A5A1CR4	1	
	P313-0003-000	2	NUT,PLAIN,HEX NP BRS, 1/4-28 (77250) 313-0003-000 (AP)	1	
	MS35338-101	2	WASHER,SPRING CD PL BRZ, 0.255 ID X 0.489 OD (96906) 310-0102-000 (AP)	1	
	MW1-265	2	INSULATOR,WSHR MICA, 0.265 ID X 1.0 OD (08289) 302-0640-270 (AP)	2	
	TW-516-25-050	2	SPACER,INSUL (08289) 352-9561-020 (AP)	1	
	304-0997-030	2	TERMINAL,LUG (80041) (AP)	2	
	310-0050-000	2	WASHER,FLAT SST, 0.265 ID X 0.625 OD (79807) (AP)	1	
2	1N1202A	2	SEMICOND DEVICE (81483) 353-1889-000 A5A1CR5	1	
	MS35650-304	2	NUT,PLAIN,HEX SST, 10-32 (96906) 313-0019-000 (AP)	1	
	MS35338-138	2	WASHER,LOCK SST, 0.194 ID X 0.334 OD (96906) 310-0284-000 (AP)	1	
	MW562-203	2	INSULATOR, WSHR MICA, 0.203 ID X 0.562 OD (08289) 302-0640-170 (AP)	2	
	TW516-10	2	SPACER,INSUL (08289) 352-9561-010 (AP)	1	
	2115	2	TERMINAL,LUG (91886) 304-1466-010 (AP)	1	
	310-0049-000	2	WASHER,FLAT SST, 0.203 ID X 0.500 OD (79807) (AP)	1	
3	1N1192	2	SEMICOND DEVICE (05277) 353-1572-000 A5A1CR3	1	
	P313-0003-000	2	NUT,PLAIN,HEX NP BRS, 1/4-28 (77250) 313-0003-000 (AP)	1	
	MS35338-101	2	WASHER,SPRING CD PL BRZ, 0.255 ID X 0.489 OD (96906) 310-0102-000 (AP)	1	
	MW1-265	2	INSULATOR,WSHR MICA, 0.265 ID X 1.0 OD (08289) 302-0640-270 (AP)	2	
	TW-516-25-050	2	SPACER,INSUL (08289) 352-9561-020 (AP)	1	
	304-0997-030	2	TERMINAL,LUG (80041) (AP)	2	
	310-0050-000	2	WASHER,FLAT SST, 0.265 ID X 0.625 OD (79807) (AP)	1	
4	RCR20G103KS	2	RESISTOR,FXD CMPSN, 10K, 10%, 1/2W (81349) 745-1394-000 A5A1R2	1	
5	SA2518	2	SEMICOND DEVICE (14099) 353-0405-020 A5A1CR2	1	
6	RCR20G103KS	2	RESISTOR,FXD CMPSN, 10K, 10%, 1/2W (81349) 745-1394-000 A5A1R1	1	
7	SA2518	2	SEMICOND DEVICE (14099) 353-0405-020 A5A1CR1	1	
8	1625-6R	2	CONNECTOR,RCPT ELEC (27264) 372-5909-240 A5A1J1	1	
9	F02A32V20AS	2	FUSE,CRTG (81349) 264-4160-000 A5A1F1	1	
10	M39018-03-0732	2	CAPACITOR,FXD ELCTLT, 1500UF, M10%P75%, 30V (81349) 184-5102-730 A5A1C1	1	
11	M39018-03-0741	2	CAPACITOR,FXD ELCTLT, 1000UF, M10%P75%, 50V (81349) 184-5102-070 A5A1C2	1	
	MS3367-5-9	2	CLAMP LOOP (96906) 435-0002-090 (AP FOR 10-11)	2	
12	1N1202A	2	SEMICOND DEVICE (81483) 353-1889-000 A5A1CR6	1	
	MS35650-304	2	NUT,PLAIN,HEX SST, 10-32 (96906) 313-0019-000 (AP)	1	
	MS35338-138	2	WASHER,LOCK SST, 0.194 ID X 0.334 OD (96906) 310-0284-000 (AP)	1	
	MW562-203	2	INSULATOR, WSHR MICA, 0.203 ID X 0.562 OD (08289) 302-0640-170 (AP)	2	
	TW516-10	2	SPACER,INSUL (08289) 352-9561-010 (AP)	1	
	2115	2	TERMINAL,LUG (91886) 304-1466-010 (AP)	2	
	310-0049-000	2	WASHER,FLAT SST, 0.203 ID X 0.500 OD (79807) (AP)	1	
13	547-5305-002	2	LUG, SOLDER	1	
	P313-0045-000	2	NUT,PLAIN,HEX SST, 6-32 (77250) 313-0045-000 (AP)	1	
	MS35338-136	2	WASHER,LOCK SST, 0.141 ID X 0.250 OD (96906) 310-0282-000 (AP)	1	
	MS51957-27	2	SCREW,MACH SST, 6-32 X 5/16 (96906) 343-0168-000 (AP)	1	
14	280-1368-060	2	LABEL,PRESSURE (12998)	1	
15	629-9691-003	2	COVER	1	
	MS51957-26	2	SCREW,MACH SST, 6-32 X 1/4 (96906) 343-0167-000 (AP)	2	
16	4-140	2	TERMINAL BOARD (71785) 367-0002-000 A5A1TB1	1	
	MS51957-30	2	SCREW,MACH SST, 6-32 X 1/2 (96906) 343-0171-000 (AP)	2	

GROUP ASSEMBLY PARTS LIST

FIG-ITEM	PART NO	INDENT	DESCRIPTION	UNITS PER ASSY	USABLE ON CODE
18-	MS35338-136	2	WASHER,LOCK SST, 0.141 ID X 0.250 OD (96906) 310-0282-000 (AP)	4	
	310-0046-000	2	WASHER,FLAT SST, 0.147 ID X 0.312 OD (79807) (AP)	4	
	540-9201-003	2	POST (AP)	2	
17	M6-476D	2	TERMINAL,FEEDTH (21242) 306-2537-040	2	
	P313-0132-000	2	NUT,PLAIN,HEX SST, 4-40 (77250) 313-0132-000 (AP)	2	
	310-0278-000	2	WASHER,LOCK SST, 0.115 ID X 0.202 OD (70318) (AP)	2	
18	MS35489-35	2	GROMMET,RBR (96906) 201-0020-000	2	
19	FM04-125V-1-2A	2	FUSE (81349) 264-0964-040 A5A1F2	1	
20	FM04-125V-1-2A	2	FUSE (81349) 264-0964-040 A5A1F3	1	
21	629-9888-001	2	BOARD-PRSD	1	
22	350-267	3	FUSEHOLDER (75915) 265-1114-000	1	
	MS16535-158	3	RIVET,TUBULAR AL, 0.123 DIA X 0.312 (96906) 305-1823-000 (AP)	1	
23	372-2602-025	3	CONTACT,ELEC	17	
24	372-2235-012	3	HOUSING,CONTACT	6	
25	SL439-433WHT	3	BOARD (12615) 306-1521-000	10	
26	F12NCFMA2-62	3	NUT,SLFLKG CD PL STL, 6-32 (72962) 333-0842-000	14	
27	629-9888-002	3	BOARD	1	

GROUP ASSEMBLY PARTS LIST

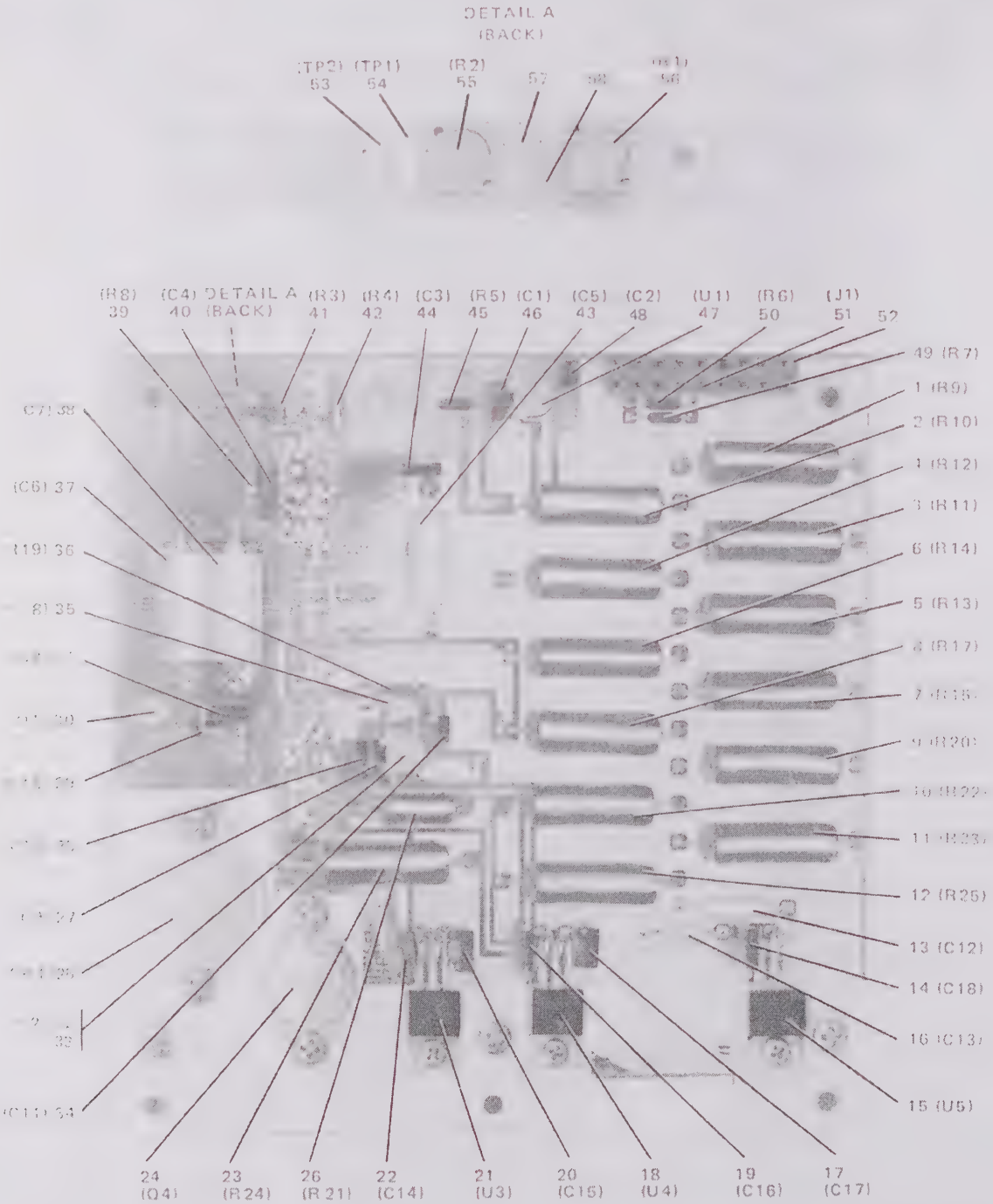

TP5-5392-017

Power Supply PC Board Assembly A5A2
Figure 19

GROUP ASSEMBLY PARTS LIST

FIG-ITEM	PART NO	INDENT	DESCRIPTION	UNITS PER ASSY	USABLE ON CODE
19-	601-5221-001	1	POWER SUPPLY PC BOARD ASSEMBLY A5A2 (SEE FIG 17-35 FOR NHA)	REF	
1	RW67VR13	2	RESISTOR,FXD 0.13 OHMS, 10%, 6.5W (81349) 747-5539-000 A5A2R9	1	
2	RW67V1R0	2	RESISTOR,FXD WW, 1.0 OHMS, 5%, 6.5W (81349) 747-5400-000 A5A2R10	1	
3	RW67VR13	2	RESISTOR,FXD 0.13 OHMS, 10%, 6.5W (81349) 747-5539-000 A5A2R11	1	
4	RW67V1R0	2	RESISTOR,FXD WW, 1.0 OHMS, 5%, 6.5W (81349) 747-5400-000 A5A2R12	1	
5	RW67VR13	2	RESISTOR,FXD 0.13 OHMS, 10%, 6.5W (81349) 747-5539-000 A5A2R13	1	
6	RW67V1R0	2	RESISTOR,FXD WW, 1.0 OHMS, 5%, 6.5W (81349) 747-5400-000 A5A2R14	1	
7	RW67V1R0	2	RESISTOR,FXD WW, 1.0 OHMS, 5%, 6.5W (81349) 747-5400-000 A5A2R15	1	
8	RW67V1R0	2	RESISTOR,FXD WW, 1.0 OHMS, 5%, 6.5W (81349) 747-5400-000 A5A2R17	1	
9	RW67V1R0	2	RESISTOR,FXD WW, 1.0 OHMS, 5%, 6.5W (81349) 747-5400-000 A5A2R20	1	
10	RW67V1R0	2	RESISTOR,FXD WW, 1.0 OHMS, 5%, 6.5W (81349) 747-5400-000 A5A2R22	1	
11	RW67V1R0	2	RESISTOR,FXD WW, 1.0 OHMS, 5%, 6.5W (81349) 747-5400-000 A5A2R23	1	
12	RW67V1R0	2	RESISTOR,FXD WW, 1.0 OHMS, 5%, 6.5W (81349) 747-5400-000 A5A2R25	1	
13	M39003-01-2304	2	CAPACITOR,FXD ELCTLT, 6.8UF, 10%, 35V (81349) 184-9086-640 A5A2C12	1	
14	CK06BX104K	2	CAPACITOR,FXD CER DIEL, 0.1UF, PORM10%, 100V (81349) 913-5019-440 A5A2C18	1	
15	LM320T15	2	INTEGRATED CIRCUIT (27014) 351-1124-160 A5A2U5	1	
	MS35649-244	2	NUT,PLAIN,HEX SST, 4-40 (96906) 313-0043-000 (AP)	1	
	MS35338-135	2	WASHER,LOCK SST, 0.115 ID X 0.209 OD (96906) 310-0279-000 (AP)	1	
	310-6340-000	2	WASHER,FLAT SST, 0.125 ID X 0.281 OD (79807) (AP)	1	
	302-0007-000	2	WASHER,SHLDR FBR, 1/8 ID X 3/8 OD (74921) (AP)	1	
	43-77-2	2	INSULATOR,PL (13103) 352-9605-100 (AP)	1	
	MS51957-16	2	SCREW,MACH STL, 4-40 X 7/16 (96906) 343-0136-000 (AP)	1	
16	M39003-01-2356	2	CAPACITOR,FXD ELCTLT, 1UF, 10%, 50V (81349) 184-9087-430 A5A2C13	1	
17	CK06BX224K	2	CAPACITOR,FXD CER DIEL, 0.22UF, PORM10%, 50V (81349) 913-5019-480 A5A2C17	1	
18	7824UC	2	INTEGRATED CIRCUIT (07263) 351-1120-070 A5A2U4	1	
	MS35649-244	2	NUT,PLAIN,HEX SST, 4-40 (96906) 313-0043-000 (AP)	1	
	MS35338-135	2	WASHER,LOCK SST, 0.115 ID X 0.209 OD (96906) 310-0279-000 (AP)	1	
	310-6340-000	2	WASHER,FLAT SST, 0.125 ID X 0.281 OD (79807) (AP)	1	
	MS51957-15	2	SCREW,MACH STL, 4-40 X 3/8 (96906) 343-0135-000 (AP)	1	
19	CK06BX104K	2	CAPACITOR,FXD CER DIEL, 0.1UF, PORM10%, 100V (81349) 913-5019-440 A5A2C16	1	
20	CK06BX224K	2	CAPACITOR,FXD CER DIEL, 0.22UF, PORM10%, 50V (81349) 913-5019-480 A5A2C15	1	
21	7815UC	2	INTEGRATED CIRCUIT (07263) 351-1120-050 A5A2U3	1	
	MS35649-244	2	NUT,PLAIN,HEX SST, 4-40 (96906) 313-0043-000 (AP)	1	
	MS35338-135	2	WASHER,LOCK SST, 0.115 ID X 0.209 OD (96906) 310-0279-000 (AP)	1	
	310-6340-000	2	WASHER,FLAT SST, 0.125 ID X 0.281 OD (79807) (AP)	1	
	MS51957-15	2	SCREW,MACH STL, 4-40 X 3/8 (96906) 343-0135-000 (AP)	1	
22	CK06BX104K	2	CAPACITOR,FXD CER DIEL, 0.1UF, PORM10%, 100V (81349) 913-5019-440 A5A2C14	1	
23	RW67V6R8	2	RESISTOR,FXD WW, 6.8 OHMS, 5%, 6.5W (81349) 747-5417-000 A5A2R24	1	
24	2N3767	2	TRANSISTOR (07263) 352-0689-020 A5A2Q4	1	

GROUP ASSEMBLY PARTS LIST

FIG-ITEM	PART NO	INDENT	DESCRIPTION	UNITS PER ASSY	USABLE ON CODE
19-	P313-0045-000	2	NUT,PLAIN,HEX SST, 6-32 (77250) 313-0045-000 (AP)	2	
	4007-6HT	2	TERMINAL,LUG (77147) 304-0016-000 (AP)	1	
	MS35338-136	2	WASHER,LOCK SST, 0.141 ID X 0.250 OD (96906) 310-0282-000 (AP)	2	
	310-6360-000	2	WASHER,FLAT SST, 0.147 ID X 0.375 OD (79807) (AP)	2	
	547-8177-014	2	INSULATOR (AP)	2	
	TA2402A	2	WASHER,MICA (08289) 352-9570-020 (AP)	1	
	MS51957-29	2	SCREW,MACH SST, 6-32 X 7/16 (96906) 343-0170-000 (AP)	2	
25	MCP649AP2	2	SEMICOND DEVICE (04713) 353-6545-020 A5A2CR1	1	
	P313-0045-000	2	NUT,PLAIN,HEX SST, 6-32 (77250) 313-0045-000 (AP)	2	
	4007-6HT	2	TERMINAL,LUG (77147) 304-0016-000 (AP)	1	
	MS35338-136	2	WASHER,LOCK SST, 0.141 ID X 0.250 OD (96906) 310-0282-000 (AP)	2	
	310-6360-000	2	WASHER,FLAT SST, 0.147 ID X 0.375 OD (79807) (AP)	2	
	547-8177-014	2	INSULATOR (AP)	2	
	DM115	2	INSULATOR,PLATE (08289) 352-9880-010 (AP)	1	
	MS51957-30	2	SCREW,MACH SST, 6-32 X 1/2 (96906) 343-0171-000 (AP)	2	
26	PW69V1R0	2	RESISTOR,FXD 1 OHM, 5%, 3W (81349) 747-5300-000 A5A2R21	1	
27	CK06BX104K	2	CAPACITOR,FXD CER DIEL, 0.1UF, PORM10%, 100V (81349) 913-5019-440 A5A2C9	1	
28	CK06BX104K	2	CAPACITOR,FXD CER DIEL, 0.1UF, PORM10%, 100V (81349) 913-5019-440 A5A2C10	1	
29	RCR07G102KS	2	RESISTOR,FXD CMPSN, 1K, 10%, 1/4W (81349) 745-0749-000 A5A2R16	1	
30	2N2222A	2	TRANSISTOR (07263) 352-0661-020 A5A2Q1	1	
31	CK06BX104K	2	CAPACITOR,FXD CER DIEL, 0.1UF, PORM10%, 100V (81349) 913-5019-440 A5A2C8	1	
32	RM723T	2	INTEGRATED CIRCUIT V RGLTR (49956) 351-1035-010 A5A2U2	1	
33	629-9887-001	2	BRACKET, HEATSINK	1	
	P313-0045-000	2	NUT,PLAIN,HEX SST, 6-32 (77250) 313-0045-000 (AP)	3	
	MS35338-136	2	WASHER,LOCK SST, 0.141 ID X 0.250 OD (96906) 310-0282-000 (AP)	3	
	310-6360-000	2	WASHER,FLAT SST, 0.147 ID X 0.375 OD (79807) (AP)	3	
	MS51957-28	2	SCREW,MACH SST, 6-32 X 3/8 (96906) 343-0169-000 (AP)	3	
34	CK05BX471K	2	CAPACITOR,FXD CER DIEL, 470PF, 10%, 200V (81349) 913-4014-000 A5A2C11	1	
35	RN55D7151F	2	RESISTOR,FXD FILM, 7.15K, 1%, 1/8W (81349) 705-1037-000 A5A2R18	1	
36	RN55D1871F	2	RESISTOR,FXD FILM, 1.87K, 1%, 1/8W (81349) 705-1009-000 A5A2R19	1	
37	M39003-01-2265	2	CAPACITOR,FXD ELCTLT, 220UF, 10%, 10V (81349) 184-9086-250 A5A2C6	1	
38	M39003-01-2265	2	CAPACITOR,FXD ELCTLT, 220UF, 10%, 10V (81349) 184-9086-250 A5A2C7	1	
39	RCR07G681KS	2	RESISTOR,FXD CMPSN, 680 OHMS, 10%, 1/4W (81349) 745-0743-000 A5A2R8	1	
40	CK06BX104K	2	CAPACITOR,FXD CER DIEL, 0.1UF, PORM10%, 100V (81349) 913-5019-440 A5A2C4	1	
41	RCR07G271KS	2	RESISTOR,FXD CMPSN, 270 OHMS, 10%, 1/4W (81349) 745-0728-000 A5A2R3	1	
42	RN55D2151F	2	RESISTOR,FXD FILM, 2.15K, 1%, 1/8W (81349) 705-1012-000 A5A2R4	1	
43	M39003-01-2295	2	CAPACITOR,FXD ELCTLT, 47UF, 10%, 20V (81349) 184-9086-550 A5A2C5	1	
44	CK06BX104K	2	CAPACITOR,FXD CER DIEL, 0.1UF, PORM10%, 100V (81349) 913-5019-440 A5A2C3	1	
45	RN55D7500F	2	RESISTOR,FXD FILM, 750 OHMS, 1%, 1/8W (81349) 705-0990-000 A5A2R5	1	
46	CK06BX104K	2	CAPACITOR,FXD CER DIEL, 0.1UF, PORM10%, 100V (81349) 913-5019-440 A5A2C1	1	

GROUP ASSEMBLY PARTS LIST

FIG-ITEM	PART NO	INDENT	DESCRIPTION	UNITS PER ASSY	USABLE ON CODE
19-47	RM723T	2	INTEGRATED CIRCUIT V RGLTR (49956) 351-1035-010 A5A2U1	1	
48	CK05BX471K	2	CAPACITOR,FXD CER DIEL, 470PF, 10%, 200V (81349) 913-4014-000 A5A2C2	1	
49	RN55D7150F	2	RESISTOR,FXD FILM, 715 OHMS, 1%, 1/8W (81349) 705-0989-000 A5A2R7	1	
50	RN55D4021F	2	RESISTOR,FXD FILM, 4.02K, 1%, 1/8W (81349) 705-1025-000 A5A2R6	1	
51	372-2624-018	2	HOUSING,CONN A5A2J1	1	
52	372-3392-011	2	CONTACT,ELEC	17	
53	M39024-11-01	2	JACK,TIP WHT (81349) 360-0159-000 A5A2TP2	1	
54	M39024-11-01	2	JACK,TIP WHT (81349) 360-0159-000 A5A2TP1	1	
55	RT22C2P501	2	RESISTOR,VAR WW, 500 OHMS, PORM5%, 3/4W (81349) 381-1721-030 A5A2R2	1	
56	RT22C2P102	2	RESISTOR,VAR WW, 1K, PORM5%, 3/4W (81349) 381-1721-040 A5A2R1	1	
57	372-2601-045	2	CONTACT,ELEC	44	
58	768-5919-003	2	PIN, INDEX	2	

GROUP ASSEMBLY PARTS LIST

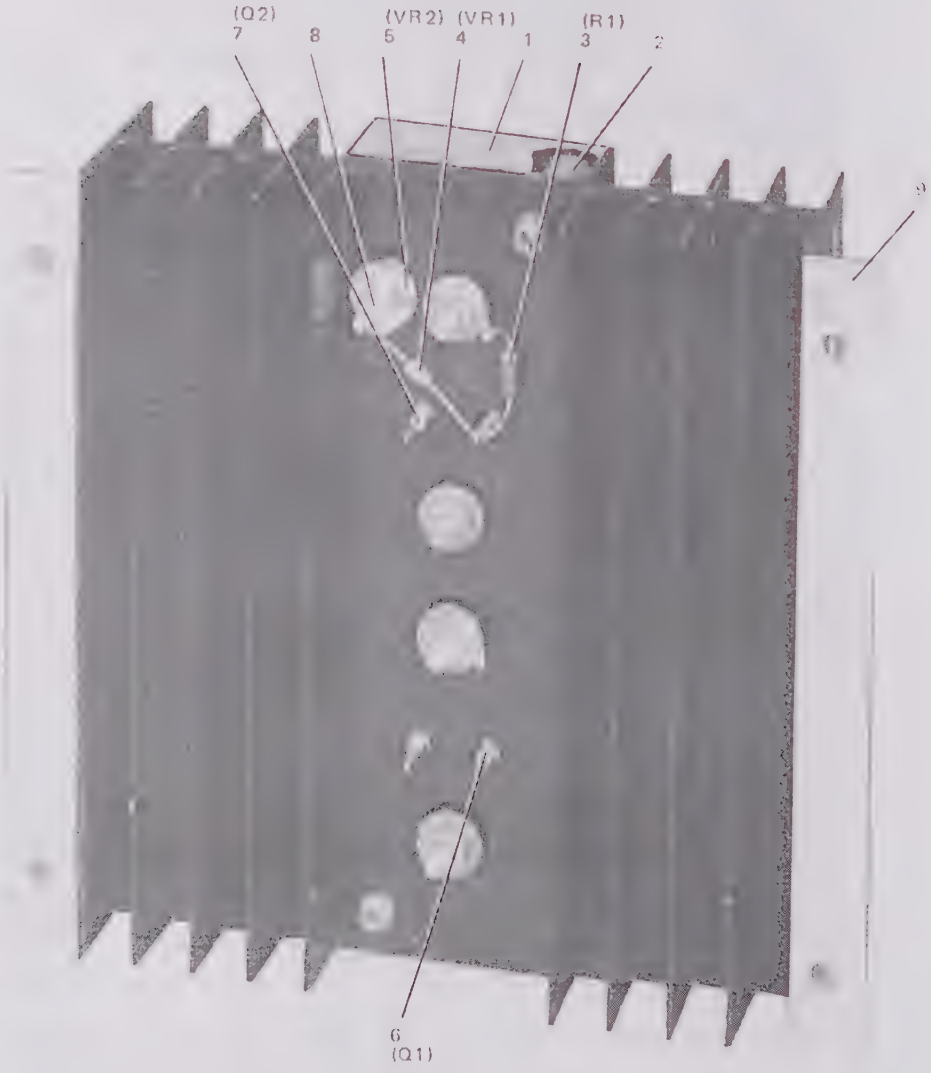

TP5-5391-017

Heat-Sink Assembly A5A3, A5A4
Figure 20

GROUP ASSEMBLY PARTS LIST

FIG-ITEM	PART NO	INDENT	DESCRIPTION	UNITS PER ASSY	USABLE ON CODE
20-	629-9950-001	1	HEATSINK ASSEMBLY A5A3 (SEE FIG 17-19 FOR NHA)	REF	D
	629-9951-001	1	HEATSINK ASSEMBLY A5A4 (SEE FIG 17-16 FOR NHA)	REF	E
1	629-9773-001	2	COVER	1	
	MS51957-13	2	SCREW,MACH STL, 4-40 X 1/4 (96906) 343-0133-000 (AP)	2	
	MS35338-135	2	WASHER,LOCK SST, 0.115 ID X 0.209 OD (96906) 310-0279-000 (AP)	2	
2	540-9172-003	2	POST, HEX	2	
	MS51957-15	2	SCREW,MACH STL, 4-40 X 3/8 (96906) 343-0135-000 (AP)	2	
	MS35338-135	2	WASHER,LOCK SST, 0.115 ID X 0.209 OD (96906) 310-0279-000 (AP)	2	
3	RCR07G561KS	2	RESISTOR,FXD CMPSN, 560 OHMS, 10%, 1/4W (81349) 745-0740-000 A5A4R1	1	E
4	1N753A	2	SEMICOND DEVICE (81483) 353-2714-000 A5A4VR1	1	E
5	1N753A	2	SEMICOND DEVICE (81483) 353-2714-000 A5A4VR2	1	E
6	66801	2	TRANSISTOR (02735) 352-1005-010 A5A3Q1 A5A4Q1	1	
	P313-0045-000	2	NUT,PLAIN,HEX SST, 6-32 (77250) 313-0045-000 (AP)	2	
	MS35338-136	2	WASHER,LOCK SST, 0.141 ID X 0.250 OD (96906) 310-0282-000 (AP)	2	
	4007-6HT	2	TERMINAL,LUG (77147) 304-0016-000 (AP)	1	
	310-6360-000	2	WASHER,FLAT SST, 0.147 ID X 0.375 OD (79807) (AP)	2	
	547-8177-014	2	BUSHING (AP)	2	
	DM115	2	INSULATOR,PLATE (08289) 352-9882-010 (AP)	1	
	MS51957-31	2	SCREW,MACH SST, 6-32 X 5/8 (96906) 343-0173-000 (AP)	2	
7	66801	2	TRANSISTOR (02735) 352-1005-010 A5A3Q2 A5A4Q2	1	
	P313-0045-000	2	NUT,PLAIN,HEX SST, 6-32 (77250) 313-0045-000 (AP)	2	
	MS35338-136	2	WASHER,LOCK SST, 0.141 ID X 0.250 OD (96906) 310-0282-000 (AP)	2	
	4007-6HT	2	TERMINAL,LUG (77147) 304-0016-000 (AP)	1	
	310-6360-000	2	WASHER,FLAT SST, 0.147 ID X 0.375 OD (79807) (AP)	2	
	547-8177-014	2	BUSHING (AP)	2	
	DM115	2	INSULATOR,PLATE (08289) 352-9882-010 (AP)	1	
	MS51957-31	2	SCREW,MACH SST, 6-32 X 5/8 (96906) 343-0173-000 (AP)	2	
8	1495D	2	TERMINAL,STDF (88245) 306-1102-000	1	E
	MS35338-135	2	WASHER,LOCK SST, 0.115 ID X 0.209 OD (96906) 310-0279-000 (AP)	1	E
	4007-4HT	2	TERMINAL,LUG (77147) 304-0015-000 (AP)	1	E
9	629-9772-001	2	HEATSINK	1	

GROUP ASSEMBLY PARTS LIST

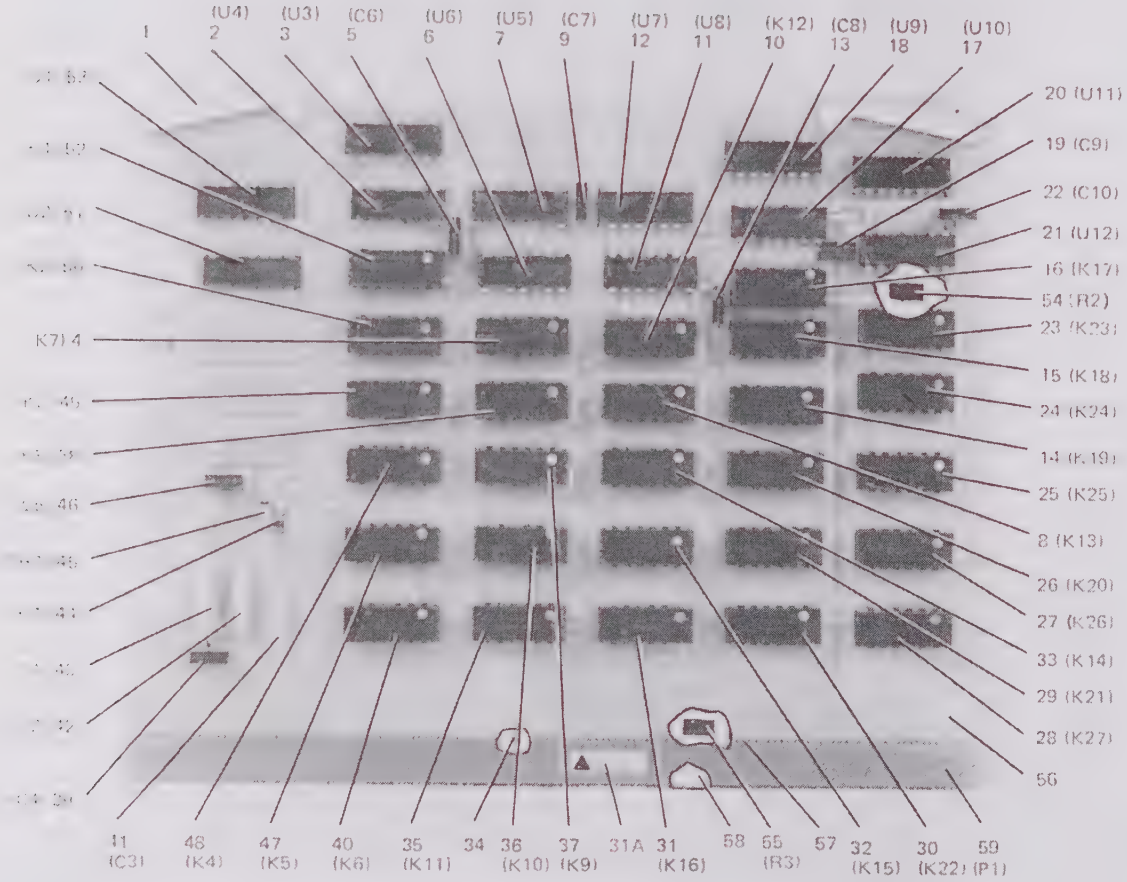

TP5-5374-017

Remote Tune Assembly A8
Figure 21

GROUP ASSEMBLY PARTS LIST

FIG-ITEM	PART NO	INDENT	DESCRIPTION	UNITS PER ASSY	USABLE ON CODE
21-	601-5881-001	1	REMOTE TUNE ASSEMBLY (ESDS) A8 (SEE FIG 1-4 FOR NHA)	REF	
1	617-8088-001	2	EXTRACTOR	2	
	MS16562-199	2	PIN,SPR SST, 0.078 DIA X 1/4 (96906) 311-0355-000 (AP)	2	
	609-9790-001	2	WASHER, FLAT (AP)	4	
2	SN7406N	2	INTEGRATED CIRCUIT (01295) 351-7632-010 A8U4	1	
3	SN74LS174N	2	INTEGRATED CIRCUIT (34335) 351-1529-040 A8U3	1	
4	1017-12-1	2	RELAY,REED (01101) 410-0558-030 A8K7	1	
5	CK06BX104K	2	CAPACITOR,FXD CER DIEL, 0.1UF, PORM10%, 100V (81349) 913-5019-440 A8C6	1	
6	SN7406N	2	INTEGRATED CIRCUIT (01295) 351-7632-010 A8U6	1	
7	SN74LS174N	2	INTEGRATED CIRCUIT (34335) 351-1529-040 A8U5	1	
8	1017-12-1	2	RELAY,REED (01101) 410-0558-030 A8K13	1	
9	CK06BX104K	2	CAPACITOR,FXD CER DIEL, 0.1UF, PORM10%, 100V (81349) 913-5019-440 A8C7	1	
10	1017-12-1	2	RELAY,REED (01101) 410-0558-030 A8K12	1	
11	SN7406N	2	INTEGRATED CIRCUIT (01295) 351-7632-010 A8U8	1	
12	SN74LS174N	2	INTEGRATED CIRCUIT (34335) 351-1529-040 A8U7	1	
13	CK06BX104K	2	CAPACITOR,FXD CER DIEL, 0.1UF, PORM10%, 100V (81349) 913-5019-440 A8C8	1	
14	1017-12-1	2	RELAY,REED (01101) 410-0558-030 A8K19	1	
15	1017-12-1	2	RELAY,REED (01101) 410-0558-030 A8K18	1	
16	1017-12-1	2	RELAY,REED (01101) 410-0558-030 A8K17	1	
17	SN7406N	2	INTEGRATED CIRCUIT (01295) 351-7632-010 A8U10	1	
18	SN74LS174N	2	INTEGRATED CIRCUIT (34335) 351-1529-040 A8U9	1	
19	CK06BX104K	2	CAPACITOR,FXD CER DIEL, 0.1UF, PORM10%, 100V (81349) 913-5019-440 A8C9	1	
20	SN74LS174N	2	INTEGRATED CIRCUIT (34335) 351-1529-040 A8U11	1	
21	SN7406N	2	INTEGRATED CIRCUIT (01295) 351-7632-010 A8U12	1	
22	CK06BX104K	2	CAPACITOR,FXD CER DIEL, 0.1UF, PORM10%, 100V (81349) 913-5019-440 A8C10	1	
23	1017-12-1	2	RELAY,REED (01101) 410-0558-030 A8K23	1	
24	1017-12-1	2	RELAY,REED (01101) 410-0558-030 A8K24	1	
25	1017-12-1	2	RELAY,REED (01101) 410-0558-030 A8K25	1	
26	1017-12-1	2	RELAY,REED (01101) 410-0558-030 A8K20	1	
27	1017-12-1	2	RELAY,REED (01101) 410-0558-030 A8K26	1	
28	1017-12-1	2	RELAY,REED (01101) 410-0558-030 A8K27	1	
29	1017-12-1	2	RELAY,REED (01101) 410-0558-030 A8K21	1	
30	1017-12-1	2	RELAY,REED (01101) 410-0558-030 A8K22	1	
31	1017-12-1	2	RELAY,REED (01101) 410-0558-030 A8K16	1	
31A	280-2745-010	2	LABEL,PRESS SENS (12998) (EFF REV LTR D)	1	
32	1017-12-1	2	RELAY,REED (01101) 410-0558-030 A8K15	1	
33	1017-12-1	2	RELAY,REED (01101) 410-0558-030 A8K14	1	
34	621-9814-001	2	PLUG, CAVITY (EFF TO REV LTR C)	1	
35	1017-12-1	2	RELAY,REED (01101) 410-0558-030 A8K11	1	
36	1017-12-1	2	RELAY,REED (01101) 410-0558-030 A8K10	1	
37	1017-12-1	2	RELAY,REED (01101) 410-0558-030 A8K9	1	
38	1017-12-1	2	RELAY,REED (01101) 410-0558-030 A8K8	1	
39	CK06BX104K	2	CAPACITOR,FXD CER DIEL, 0.1UF, PORM10%, 100V (81349) 913-5019-440 A8C4	1	
40	1017-12-1	2	RELAY,REED (01101) 410-0558-030 A8K6	1	
41	M39003-01-2286	2	CAPACITOR,FXD ELCTLT, 10UF, 10%, 20V (81349) 184-9086-460 A8C3	1	
42	M39003-01-2286	2	CAPACITOR,FXD ELCTLT, 10UF, 10%, 20V (81349) 184-9086-460 A8C2	1	
43	M39003-01-2286	2	CAPACITOR,FXD ELCTLT, 10UF, 10%, 20V (81349) 184-9086-460 A8C1	1	
44	RCR07G103KS	2	RESISTOR,FXD CMPSN, 10K, 10%, 1/4W (81349) 745-0785-000 A8R1	1	
45	1N4454GE	2	SEMICOND DEVICE (03508) 353-3644-010 A8CR1	1	
46	CK06BX104K	2	CAPACITOR,FXD CER DIEL, 0.1UF, PORM10%, 100V (81349) 913-5019-440 A8C5	1	
47	1017-12-1	2	RELAY,REED (01101) 410-0558-030 A8K5	1	

GROUP ASSEMBLY PARTS LIST

FIG-ITEM	PART NO	INDENT	DESCRIPTION	UNITS PER ASSY	USABLE ON CODE
21-48	1017-12-1	2	RELAY,REED (01101) 410-0558-030 A8K4	1	
49	1017-12-1	2	RELAY,REED (01101) 410-0558-030 A8K3	1	
50	1017-12-1	2	RELAY,REED (01101) 410-0558-030 A8K2	1	
51	N74LS32N	2	INTEGRATED CIRCUIT LOGIC GATE (18324) 351-1523-260 A8U2	1	
52	1017-12-1	2	RELAY,REED (01101) 410-0558-030 A8K1	1	
53	SN74LS138N	2	INTEGRATED CIRCUIT (04713) 351-1526-030 A8U1	1	
54	RCR05G152KS	2	RESISTOR,FXD CMPSN, 1.5K, 10%, 1/8W (81349) 745-2347-000 A8R2	1	
55	RCR05G470KS	2	RESISTOR,FXD CMPSN, 47 OHMS, 10%, 1/8W (81349) 745-2292-000 A8R3	1	
56	601-5813-001	2	PWB-MECH ASSY	1	
57	372-2234-020	3	CONTACT,ELEC	64	
58	372-2234-010	3	CONTACT,ELEC	65	
59	372-2622-074	3	HOUSING,CONN A8P1	1	

GROUP ASSEMBLY PARTS LIST

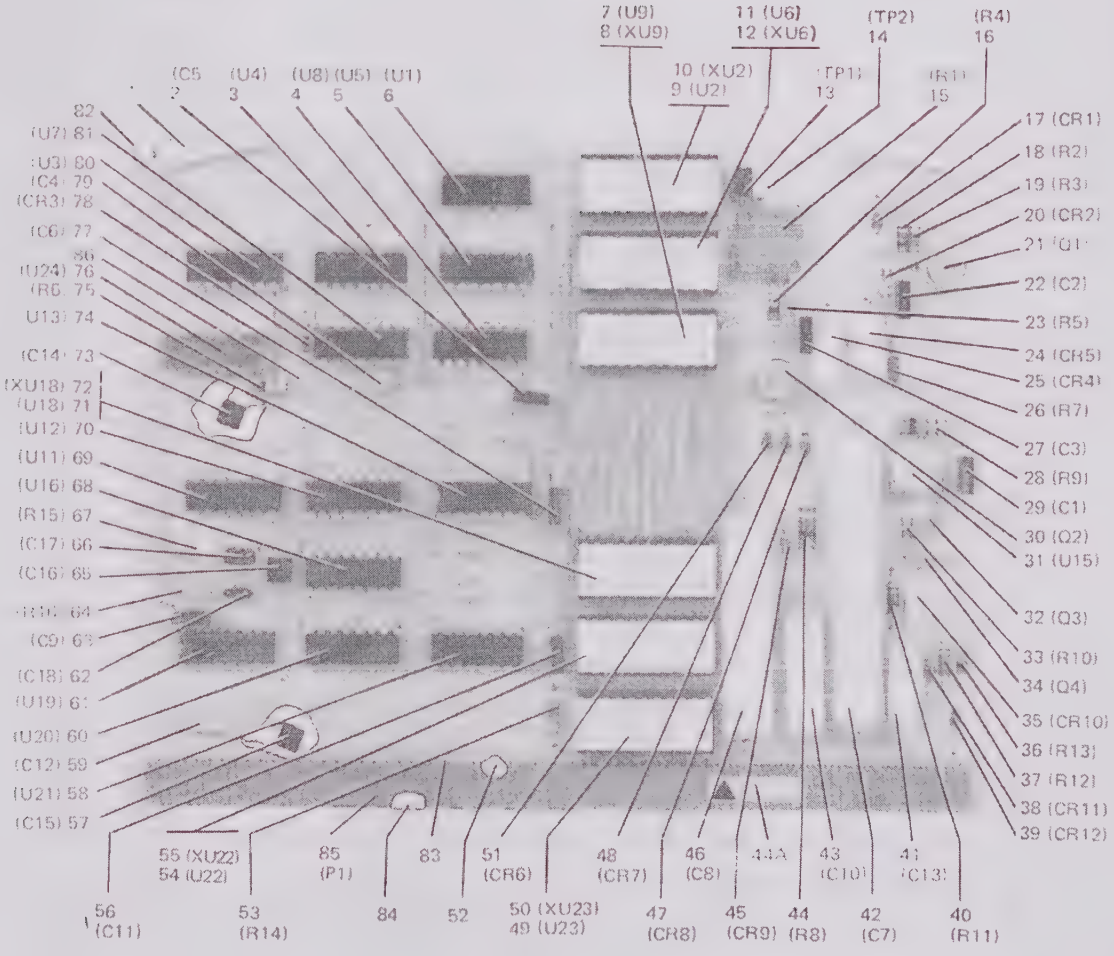

TP5-5375-017

Store/Recall Assembly A9
Figure 22

GROUP ASSEMBLY PARTS LIST

FIG-ITEM	PART NO	INDENT	DESCRIPTION	UNITS PER ASSY	USABLE ON CODE
22-	601-5882-001	1	STORE/RECALL ASSEMBLY (ESDS) A9 (SEE FIG 1-17 FOR NHA)	REF	
1	618-8088-001	2	EXTRACTOR	2	
	MS16562-199	2	PIN,SPR SST, 0.078 DIA X 1/4 (96906) 311-0355-000 (AP)	2	
	609-9790-001	2	WASHER (AP)	4	
2	CK06BX104K	2	CAPACITOR,FXD CER DIEL, 0.1UF, PORM10%, 100V (81349) 913-5019-440 A9C5	1	
3	314A152	2	RESISTOR NTWK DUAL-IN-LINE, 1.5K, 2%, 125V (01121) 350-4027-130 A9U4	1	
4	SN74LS139N	2	INTEGRATED CIRCUIT (04713) 351-1526-040 A9U8	1	
5	N74LS20N	2	INTEGRATED CIRCUIT LOGIC GATE (18324) 351-1523-130 A9U5	1	
6	314A152	2	RESISTOR NTWK DUAL-IN-LINE, 1.5K, 2%, 125V (01121) 350-4027-130 A9U1	1	
7	ER3401	2	INTEGRATED CIRCUIT (ESDS) (14936) 351-8530-010 A9U9 (EFF TO REV LTR A)	1	
7	ER3400	2	INTEGRATED CIRCUIT (ESDS) (14936) 351-8530-020 A9U9 (EFF REV LTR A)	1	
8	TSW3800-22BW	2	SOCKET,IC (23880) 220-0075-060 A9XU9	1	
9	ER3401	2	INTEGRATED CIRCUIT (ESDS) (14936) 351-8530-010 A9U2 (EFF TO REV LTR A)	1	
9	ER3400	2	INTEGRATED CIRCUIT (ESDS) (14936) 351-8530-020 A9U2 (EFF REV LTR A)	1	
10	TSW3800-22BW	2	SOCKET,IC (23880) 220-0075-060 A9XU2	1	
11	ER3401	2	INTEGRATED CIRCUIT (ESDS) (14936) 351-8530-010 A9U6 (EFF TO REV LTR A)	1	
11	ER3400	2	INTEGRATED CIRCUIT (ESDS) (14936) 351-8530-020 A9U6 (EFF REV LTR A)	1	
12	TSW3800-22BW	2	SOCKET,IC (23880) 220-0075-060 A9XU6	1	
13	105-1103-001	2	JACK,TIP BLK (74970) 360-0484-030 A9TP1	1	
14	105-1101-001	2	JACK,TIP WHT (74970) 360-0484-010 A9TP2	1	
15	RT22C2P502	2	RESISTOR,VAR WW, 5K, PORM5%, 3/4W (81349) 381-1721-060 A9R1	1	
16	RCR07G470KS	2	RESISTOR,FXD CMPSN, 47 OHMS, 10%, 1/4W (81349) 745-0701-000 A9R4	1	
17	1N645	2	SEMICOND DEVICE (15238) 353-2607-000 A9CR1	1	
18	RCR07G102KS	2	RESISTOR,FXD CMPSN, 1K, 10%, 1/4W (81349) 745-0749-000 A9R2	1	
19	RCR07G121KS	2	RESISTOR,FXD CMPSN, 120 OHMS, 10%, 1/4W (81349) 745-0716-000 A9R3	1	
20	1N963B	2	SEMICOND DEVICE (14433) 353-3174-000 A9CR2	1	
21	2N2905A	2	TRANSISTOR (12040) 352-0550-000 A9Q1	1	
22	CK06BX104K	2	CAPACITOR,FXD CER DIEL, 0.1UF, PORM10%, 100V (81349) 913-5019-440 A9C2	1	
23	RN55D1542F	2	RESISTOR,FXD FILM, 15.4K, 1%, 1/8W (81349) 705-1053-000 A9R5	1	
24	1N3024B	2	SEMICOND DEVICE (99942) 353-3129-000 A9CR5	1	
25	1N3026B	2	SEMICOND DEVICE (99942) 353-3131-000 A9CR4	1	
26	RN55D1002F	2	RESISTOR,FXD FILM, 10K, 1%, 1/8W (81349) 705-1044-000 A9R7	1	
27	CK06BX104K	2	CAPACITOR,FXD CER DIEL, 0.1UF, PORM10%, 100V (81349) 913-5019-440 A9C3	1	
28	RCR20G103KS	2	RESISTOR,FXD CMPSN, 10K, 10%, 1/2W (81349) 745-1394-000 A9R9	1	
29	CK06BX104K	2	CAPACITOR,FXD CER DIEL, 0.1UF, PORM10%, 100V (81349) 913-5019-440 A9C1	1	
30	2N2905A	2	TRANSISTOR (12040) 352-0550-000 A9Q2	1	
31	MC1536U	2	INTEGRATED CIRCUIT (04713) 351-1112-030 A9U15	1	
32	2N2907A	2	TRANSISTOR (15818) 352-0551-010 A9Q3	1	
33	RCR07G473KS	2	RESISTOR,FXD CMPSN, 47K, 10%, 1/4W (81349) 745-0809-000 A9R10	1	
34	2N2907A	2	TRANSISTOR (15818) 352-0551-010 A9Q4	1	

GROUP ASSEMBLY PARTS LIST

FIG-ITEM	PART NO	INDENT	DESCRIPTION	UNITS PER ASSY	USABLE ON CODE
22-35	LVA100A	2	SEMICOND DEVICE (01281) 353-6532-100 A9CR10 (EFF TO REV LTR C)	1	
35	1N758A	2	SEMICOND DEVICE (81483) 353-2724-000 A9CR10 (EFF REV LTR C)	1	
36	RCR07G103KS	2	RESISTOR,FXD CMPSN, 10K, 10%, 1/4W (81349) 745-0785-000 A9R13	1	
37	RCR07G272KS	2	RESISTOR,FXD CMPSN, 2.7K, 10%, 1/4W (81349) 745-0764-000 A9R12	1	
38	1N645	2	SEMICOND DEVICE (15238) 353-2607-000 A9CR11	1	
39	1N645	2	SEMICOND DEVICE (15238) 353-2607-000 A9CR12	1	
40	RCR07G102KS	2	RESISTOR,FXD CMPSN, 1K, 10%, 1/4W (81349) 745-0749-000 A9R11	1	
41	M39003-01-2274	2	CAPACITOR,FXD ELCTLT, 68UF, 10%, 15V (81349) 184-9086-340 A9C13	1	
42	600D107F075DL5	2	CAPACITOR,FXD ELCTLT, 100UF, M10%P75%, 75V (56289) 183-1277-460 A9C7	1	
43	600D226G050KD5	2	CAPACITOR,FXD ELCTLT, 22UF, M10%P75%, 50V (56289) 183-1277-020 A9C10	1	
44	RCR20G102KS	2	RESISTOR,FXD CMPSN, 1K, 10%, 1/2W (81349) 745-1352-000 A9R8	1	
44A	280-2745-010	2	LABEL,PRESS SENS (12998) (EFF REV LTR E)	1	
45	1N645	2	SEMICOND DEVICE (15238) 353-2607-000 A9CR9	1	
46	600D107G050DJ5	2	CAPACITOR,FXD ELCTLT, 100UF, M10%P75%, 50V (56289) 183-1277-350 A9C8	1	
47	1N645	2	SEMICOND DEVICE (15238) 353-2607-000 A9CR8	1	
48	1N645	2	SEMICOND DEVICE (15238) 353-2607-000 A9CR7	1	
49	ER3401	2	INTEGRATED CIRCUIT (ESDS) (14936) 351-8530-010 A9U23 (EFF TO REV LTR A)	1	
49	ER3400	2	INTEGRATED CIRCUIT (ESDS) (14936) 351-8530-020 A9U23 (EFF REV LTR A)	1	
50	TSW3800-22BW	2	SOCKET,IC (23880) 220-0075-060 A9XU23	1	
51	1N645	2	SEMICOND DEVICE (15238) 353-2607-000 A9CR6	1	
52	621-9814-001	2	PLUG (EFF TO REV LTR D)	1	
53	RN55D1501F	2	RESISTOR,FXD FILM, 1.5K, 1%, 1/8W (81349) 705-3605-080 A9R14	1	
54	ER3401	2	INTEGRATED CIRCUIT (ESDS) (14936) 351-8530-010 A9U22 (EFF TO REV LTR A)	1	
54	ER3400	2	INTEGRATED CIRCUIT (ESDS) (14936) 351-8530-020 A9U22 (EFF REV LTR A)	1	
55	TSW3800-22BW	2	SOCKET,IC (23880) 220-0075-060 A9XU22	1	
56	CK06BX104K	2	CAPACITOR,FXD CER DIEL, 0.1UF, PORM10%, 100V (81349) 913-5019-440 A9C11	1	
57	CK05BX471K	2	CAPACITOR,FXD CER DIEL, 470PF, 10%, 200V (81349) 913-4014-000 A9C15	1	
58	N8T97N	2	INTEGRATED CIRCUIT (18324) 351-1267-020 A9U21	1	
59	M39003-01-2286	2	CAPACITOR,FXD ELCTLT, 10UF, 10%, 20V (81349) 184-9086-460 A9C12	1	
60	N8T97N	2	INTEGRATED CIRCUIT (18324) 351-1267-020 A9U20	1	
61	N8T97N	2	INTEGRATED CIRCUIT (18324) 351-1267-020 A9U19	1	
62	DM5E330J050WV	2	CAPACITOR,FXD MICA DIEL, 33PF, 5%, 50V (72136) 912-4141-220 A9C18	1	
63	CK06BX104K	2	CAPACITOR,FXD CER DIEL, 0.1UF, PORM10%, 100V (81349) 913-5019-440 A9C9	1	
64	RN55E2492B	2	RESISTOR,FXD FILM, 24.9K, 0.1%, 1/10W (81349) 705-5976-240 A9R16	1	
65	CK05BX471K	2	CAPACITOR,FXD CER DIEL, 470PF, 10%, 200V (81349) 913-4014-000 A9C16	1	
66	DM5F301J050WV	2	CAPACITOR,FXD MICA DIEL, 300PF, 5%, 50V (72136) 912-4141-480 A9C17	1	
67	RN55E1822B	2	RESISTOR,FXD FILM, 18.2K, 0.1%, 1/10W (81349) 705-5975-970 A9R15	1	
68	SN74LS174N	2	INTEGRATED CIRCUIT (34335) 351-1529-040 A9U16	1	

GROUP ASSEMBLY PARTS LIST

FIG-ITEM	PART NO	INDENT	DESCRIPTION	UNITS PER ASSY	USABLE ON CODE
22-69	N74LS04N	2	INTEGRATED CIRCUIT LOGIC GATE (18324) 351-1523-090 A9U11	1	
70	SN74LS174N	2	INTEGRATED CIRCUIT (34335) 351-1529-040 A9U12	1	
71	ER3401	2	INTEGRATED CIRCUIT (ESDS) (14936) 351-8530-010 A9U18 (EFF TO REV LTR A)	1	
71	ER3400	2	INTEGRATED CIRCUIT (ESDS) (14936) 351-8530-020 A9U18 (EFF REV LTR A)	1	
72	TSW3800-22BW	2	SOCKET,IC (23880) 220-0075-060 A9XU18	1	
73	CK06BX104K	2	CAPACITOR,FXD CER DIEL, 0.1UF, PORM10%, 100V (81349) 913-5019-440 A9C14	1	
74	SN74LS74AN	2	INTEGRATED CIRCUIT FLIP FLOP (04713) 351-1525-040 A9U13	1	
75	RCR07G103KS	2	RESISTOR,FXD CMPSN, 10K, 10%, 1/4W (81349) 745-0785-000 A9R6	1	
76	MC9602CEBJC	2	INTEGRATED CIRCUIT (04713) 351-7616-020 A9U24	1	
77	CK06BX104K	2	CAPACITOR,FXD CER DIEL, 0.1UF, PORM10%, 100V (81349) 913-5019-440 A9C6	1	
78	IN4454GE	2	SEMICOND DEVICE (03508) 353-3644-010 A9CR3	1	
79	M39003-01-2286	2	CAPACITOR,FXD ELCTLT, 10UF, 10%, 20V (81349) 184-9086-460 A9C4	1	
80	N74LS00N	2	INTEGRATED CIRCUIT LOGIC GATE (18324) 351-1523-110 A9U3	1	
81	SN74LS74AN	2	INTEGRATED CIRCUIT FLIP FLOP (04713) 351-1525-040 A9U7	1	
82	638-7556-001	2	CIRCUIT CARD- MECH	1	
83	372-2234-020	3	CONTACT,ELEC	64	
84	372-2234-010	3	CONTACT,ELEC	65	
85	372-2622-074	3	HOUSING,CONN A9P1	1	
86	372-2601-037	3	CONTACT,ELEC	3	

GROUP ASSEMBLY PARTS LIST

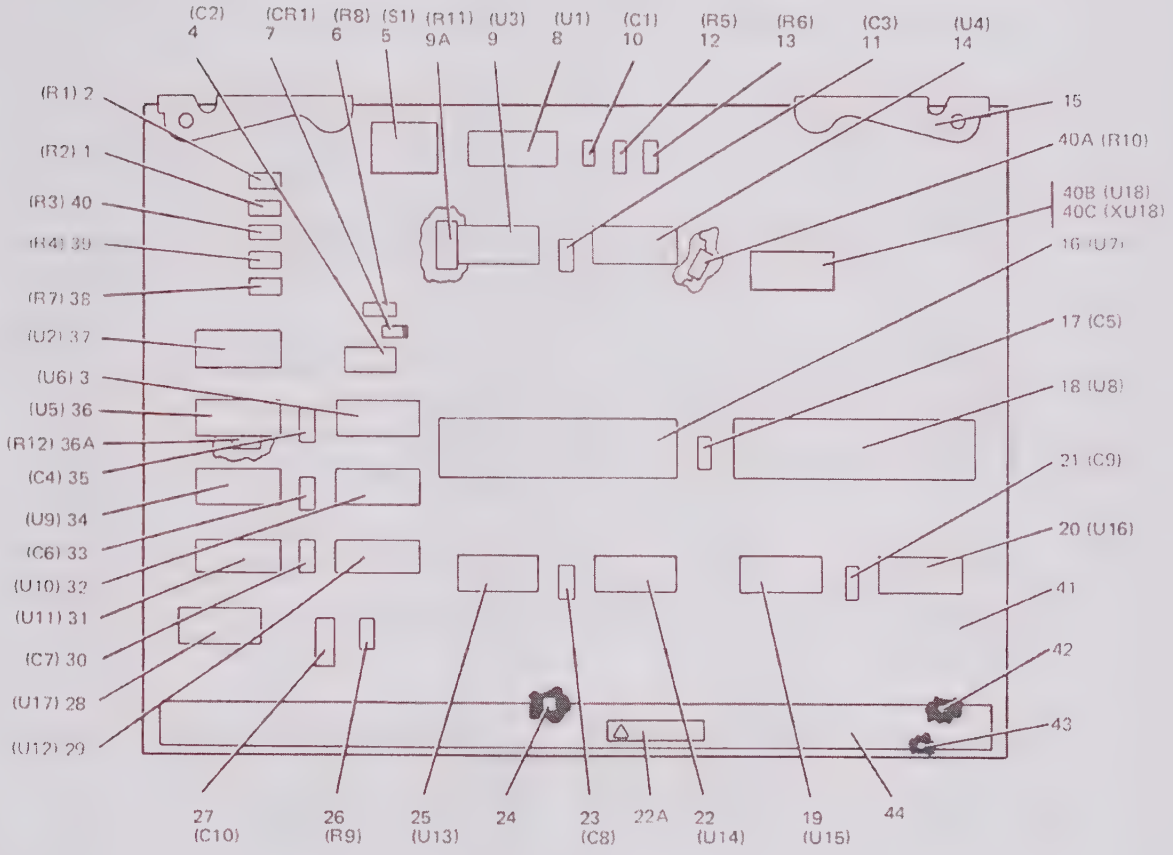

TP5-5390-019

IEEE-488/1978 Bus Interface Assembly A10
Figure 23

GROUP ASSEMBLY PARTS LIST

FIG-ITEM	PART NO	INDENT	DESCRIPTION	UNITS PER ASSY	USABLE ON CODE
23-	601-5883-001	1	IEEE-488/1978 BUS INTERFACE ASSEMBLY (ESDS) A10 (SEE FIG 1-3 FOR NHA)	REF	
1	RCR07G102KS	2	RESISTOR,FXD CMPSN, 1K, 10%, 1/4W (81349) 745-0749-000 A10R2	1	
2	RCR07G102KS	2	RESISTOR,FXD CMPSN, 1K, 10%, 1/4W (81349) 745-0749-000 A10P1	1	
3	NST97N	2	INTEGRATED CIRCUIT (18324) 351-1267-020 A10U6	1	
4	M39003-01-2286	2	CAPACITOR,FXD ELCTLT, 10UF, 10%, 20V (81349) 184-9086-460 A10C2 (EFF TO REV LTR B)	1	
4	M39003-01-2254	2	CAPACITOR,FXD ELCTLT, 4.7UF, 10%, 10V (81349) 184-9086-140 A10C2 (EFF REV LTR B)	1	
5	A10040-105	2	SWITCH,DUAL PKG (27264) 266-0243-020 A10S1	1	
6	RCR07G102KS	2	RESISTOR,FXD CMPSN, 1K, 10%, 1/4W (81349) 745-0749-000 A10R8 (EFF TO REV LTR B)	1	
6	RCR07G103KS	2	RESISTOR,FXD CMPSN, 10K, 10%, 1/4W (81349) 745-0735-000 A10R8 (EFF REV LTR B)	1	
7	1N4454GE	2	SEMICOND DEVICE (03508) 353-3644-010 A10CR1	1	
8	50459-932459	2	INTEGRATED CIRCUIT (07263) 351-7619-040 A10U1	1	
9	SN7406N	2	INTEGRATED CIRCUIT (01295) 351-7632-010 A10U3	1	
9A	RCR05G102KS	2	RESISTOR,FXD CMPSN, 1K, 10%, 1/8W (81349) 745-2341-000 A10R11 (EFF REV LTR C)	1	
10	CK05BX221K	2	CAPACITOR,FXD CER DIEL, 220PF, 10%, 200V (81349) 913-4010-000 A10C1	1	
11	CK05BX103K	2	CAPACITOR,FXD CER DIEL, 0.01UF, PORM10%, 100V (81349) 913-5019-200 A10C3	1	
12	RCR07G471KS	2	RESISTOR,FXD CMPSN, 470 OHMS, 10%, 1/4W (81349) 745-0737-000 A10R5	1	
13	RCR07G102KS	2	RESISTOR,FXD CMPSN, 1K, 10%, 1/4W (81349) 745-0749-000 A10R6	1	
14	SN75450BN	2	INTEGRATED CIRCUIT (01295) 351-7626-010 A10U4	1	
15	617-8088-001	2	EXTRACTOR, CIRCUIT CARD	2	
	MS16562-199	2	PIN,SPR SST, 0.078 DIA X 1/4 (96906) 311-0355-000 (AP)	2	
	609-9790-001	2	WASHER (AP)	4	
16	P8255A	2	INTEGRATED CIRCUIT (ESDS) (34649) 351-8439-030 A10U7	1	
17	CK05BX103K	2	CAPACITOR,FXD CER DIEL, 0.01UF, PORM10%, 100V (81349) 913-5019-200 A10C5	1	
18	P8255A	2	INTEGRATED CIRCUIT (ESDS) (34649) 351-8439-030 A10U8	1	
19	MC3441AP	2	INTEGRATED CIRCUIT (04713) 351-1338-010 A10U15	1	
20	MC3441AP	2	INTEGRATED CIRCUIT (04713) 351-1338-010 A10U16	1	
21	CK05BX103K	2	CAPACITOR,FXD CER DIEL, 0.01UF, PORM10%, 100V (81349) 913-5019-200 A10C9	1	
22	MC3441AP	2	INTEGRATED CIRCUIT (04713) 351-1338-010 A10U14	1	
22A	280-2745-010	2	LABEL,PRESS SENS (12998) (EFF REV LTR F)	1	
23	CK05BX103K	2	CAPACITOR,FXD CER DIEL, 0.01UF, PORM10%, 100V (81349) 913-5019-200 A10C8	1	
24	621-9814-001	2	PLUG, KEYING (EFF TO REV LTR D)	1	
25	MC3441AP	2	INTEGRATED CIRCUIT (04713) 351-1338-010 A10U13	1	
26	RCR07G103KS	2	RESISTOR,FXD CMPSN, 10K, 10%, 1/4W (81349) 745-0785-000 A10R9 (EFF TO REV LTR B)	1	
26	RCR07G102KS	2	RESISTOR,FXD CMPSN, 1K, 10%, 1/4W (81349) 745-0749-000 A10R9 (EFF REV LTR B)	1	
27	M39003-01-2254	2	CAPACITOR,FXD ELCTLT, 4.7UF, 10%, 10V (81349) 184-9086-140 A10C10 (EFF TO REV LTR B)	1	
27	M39003-01-2286	2	CAPACITOR,FXD ELCTLT, 10UF, 10%, 20V (81349) 184-9086-460 A10C10 (EFF REV LTR B)	1	
28	SN74LS139N	2	INTEGRATED CIRCUIT (04713) 351-1526-040 A10U17	1	
29	N8T97N	2	INTEGRATED CIRCUIT (18324) 351-1267-020 A10U12	1	
30	CK05BX103K	2	CAPACITOR,FXD CER DIEL, 0.01UF, PORM10%, 100V (81349) 913-5019-200 A10C7	1	
31	N74LS00N	2	INTEGRATED CIRCUIT LOGIC GATE (18324) 351-1523-110 A10U11	1	
32	N8T97N	2	INTEGRATED CIRCUIT (18324) 351-1267-020 A10U10	1	

GROUP ASSEMBLY PARTS LIST

FIG-ITEM	PART NO	INDENT	DESCRIPTION	UNITS PER ASSY	USABLE ON CODE
23-33	CK05BX103K	2	CAPACITOR,FXD CER DIEL, 0.01UF, PORM10%, 100V (81349) 913-5019-200 A10C6	1	
34	SN74LS73AN	2	INTEGRATED CIRCUIT FLIP FLOP (04713) 351-1525-060 A10U9	1	
35	CK05BX103K	2	CAPACITOR,FXD CER DIEL, 0.01UF, PORM10%, 100V (81349) 913-5019-200 A10C4	1	
36	SN74LS73AN	2	INTEGRATED CIRCUIT FLIP FLOP (04713) 351-1525-060 A10U5	1	
36A	RCR05G102KS	2	RESISTOR,FXD CMPSN, 1K, 10%, 1/8W (81349) 745-2341-000 A10R12 (EFF REV LTR C)	1	
37	N74LS04N	2	INTEGRATED CIRCUIT LOGIC GATE (18324) 351-1523-090 A10U2	1	
38	RCR07G102KS	2	RESISTOR,FXD CMPSN, 1K, 10%, 1/4W (81349) 745-0749-000 A10R7	1	
39	RCR07G102KS	2	RESISTOR,FXD CMPSN, 1K, 10%, 1/4W (81349) 745-0749-000 A10R4	1	
40	RCR07G102KS	2	RESISTOR,FXD CMPSN, 1K, 10%, 1/4W (81349) 745-0749-000 A10R3	1	
40A	RCR05G102KS	2	RESISTOR,FXD CMPSN, 1K, 10%, 1/8W (81349) 745-2341-000 A10R10 (EFF REV LTR C)	1	
40B	SN74LS86N	2	INTEGRATED CIRCUIT (04713) 351-1698-010 A10U18 (EFF REV LTR E)(SB8)	1	
40C	TSW3800-14BW	2	SOCKET,IC (23880) 220-0075-020 A10XU18 (EFF REV LTR E)(SB8)	1	
41	638-7938-001	2	CIRCUIT CARD MECH SUBASSY	1	
42	372-2234-020	3	CONTACT,ELEC	64	
43	372-2234-010	3	CONTACT,ELEC	65	
44	372-2622-074	3	HOUSING,CONN	1	

GROUP ASSEMBLY PARTS LIST

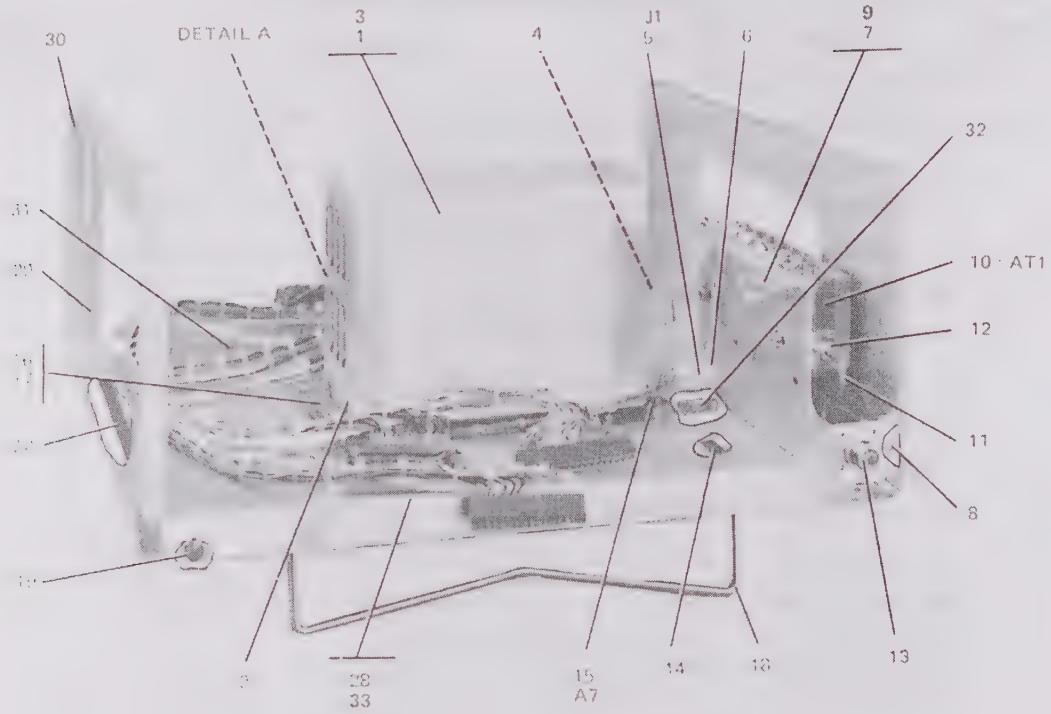

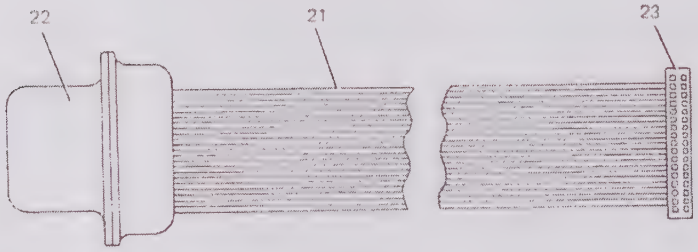

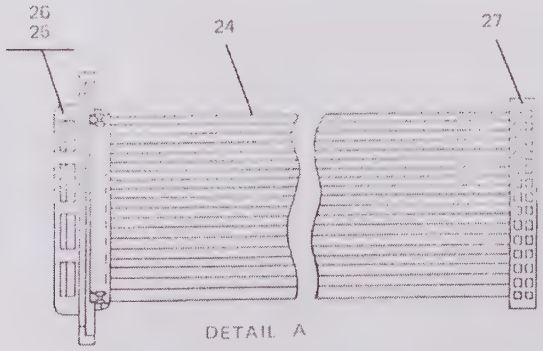

TP5-5500-017

Chassis Assembly A6
Figure 24

GROUP ASSEMBLY PARTS LIST

FIG-ITEM	PART NO	INDENT	DESCRIPTION	UNITS PER ASSY	USABLE ON CODE
24-	629-9780-002	1	CHASSIS ASSY A6 (SEE FIG 1-8 FOR NHA)	REF	
1	638-2236-001	2	CAGE,CARD	1	
	MS51957-17	2	SCREW,MACH STL, 4-40 X 1/2 (96906) 343-0137-000 (AP)	4	
2	638-2387-001	3	FASTENER,ANGLE	4	
3	638-2236-002	3	CAGE, CARD- WELDED	1	
4	638-2197-001	2	HARNESS, WIRING	1	
	MS51957-27	2	SCREW,MACH SST, 6-32 X 5/16 (96906) 343-0168-000 (AP)	1	
5	1625-9R	2	CONNECTOR,RCPT ELEC (27264) 372-5909-290 A6J1	1	
6	1855TL	2	SOCKET CONTACT (27264) 372-5909-090	9	
7	629-9739-001	2	BRACKET, CONNECTOR	1	
	MS51957-27	2	SCREW,MACH SST, 6-32 X 5/16 (96906) 343-0168-000 (AP)	4	
8	F12NCFMA2-62	3	NUT,SLFLKG CD PL STL, 6-32 (72962) 333-0842-000	4	
9	629-9739-002	3	BRACKET, CONNECTOR	1	
10	PA588	2	ATTENUATOR,PROG (23042) 378-0629-010 A6AT1	1	
	MS51957-41	2	SCREW,MACH SST, 8-32 X 1/4 (96906) 343-0185-000 (AP)	2	
	310-0283-000	2	WASHER,LOCK SST, 0.168 ID X 0.280 OD (70318) (AP)	2	
	310-0048-000	2	WASHER,FLAT SST, 0.172 ID X 0.437 OD (79807) (AP)	2	
11	629-9781-001	2	CABLE ASSY-RF	1	
	68NM40	2	NUT,SLFLKG,HEX AL, 4-40 (72962) 333-0347-000 (AP)	4	
	MS51959-15	2	SCREW,MACH SST, 4-40 X 3/8 (96906) 342-0046-000 (AP)	4	
12	2001-7941	3	CONNECTOR,PLUG ELEC (02154) 357-7395-010	1	
13	KN19-154M06	3	CONNECTOR,JACK (91836) 357-7530-030	1	
14	629-9885-001	2	PLATE, SPACER	2	
15	601-5938-001	2	BACKPLANE A7	1	
	MS51957-12	2	SCREW,MACH STL, 4-40 X 3/16 (96906) 343-0132-000 (AP) (EFF TO REV LTR G)	5	
	MS51957-13	2	SCREW,MACH STL, 4-40 X 1/4 (96906) 343-0133-000 (AP) (EFF TO REV LTR G)	5	
	MS35338-135	2	WASHER,LOCK SST, 0.115 ID X 0.209 OD (96906) 310-0279-000 (AP) (EFF TO REV LTR G)	10	
	310-6340-000	2	WASHER,FLAT SST, 0.125 ID X 0.281 OD (79807) (AP) (EFF TO REV LTR G)	5	
	540-9201-003	2	POST (AP) (EFF TO REV LTR G)	5	
	MS51957-32	2	SCREW,MACH SST, 6-32 X 3/4 (96906) 343-0174-000 (AP) (EFF REV LTR G)	4	
	MS51957-19	2	SCREW,MACH STL, 4-40 X 3/4 (96906) 343-0139-000 (AP) (EFF REV LTR G)	1	
	MS35338-136	2	WASHER,LOCK SST, 0.141 ID X 0.250 OD (96906) 310-0282-000 (AP) (EFF REV LTR G)	8	
	MS35338-135	2	WASHER,LOCK SST, 0.115 ID X 0.209 OD (96906) 310-0279-000 (AP) (EFF REV LTR G)	2	
	310-0046-000	2	WASHER,FLAT SST, 0.147 ID X 0.312 OD (79807) (AP) (EFF REV LTR G)	4	
	MS15795-803	2	WASHER,FLAT CRES, 0.125ID X 0.250 OD (96906) 310-0779-030 (AP) (EFF REV LTR G)	1	
	P313-0045-000	2	NUT,PLAIN,HEX SST, 6-32 (77250) 313-0045-000 (AP) (EFF REV LTR G)	4	
	P313-0132-000	2	NUT,PLAIN,HEX SST, 4-40 (77250) 313-0132-000 (AP) (EFF REV LTR G)	1	
	540-9201-003	2	POST, HEX (AP) (EFF REV LTR G)	4	
	540-9160-003	2	POST, HEX (AP) (EFF REV LTR G)	1	
16	372-2601-043	3	CONTACT,ELEC (EFF TO REV LTR B)	331	
16	372-2601-047	3	CONTACT,ELEC (EFF REV LTR B)	326	
17	372-2601-167	3	CONTACT,ELEC (EFF TO REV LTR B)	64	
17	372-2601-131	3	CONTACT,ELEC (EFF REV LTR B)	64	
18	629-9783-001	2	BAIL, SUPPORT	1	
	68NM40	2	NUT,SLFLKG,HEX AL, 4-40 (72962) 333-0347-000 (AP)	4	
	MS51959-15	2	SCREW,MACH SST, 4-40 X 3/8 (96906) 342-0046-000 (AP)	4	
	629-9886-001	2	CLAMP, BAIL (AP)	2	
19	827S	2	BUMPER,RBR (70485) 200-2069-000 (EFF TO REV LTR H)	4	
19	634-9319-001	2	BUMPER, RUBBER (EFF REV LTR H)	4	
	540-9205-003	2	POST, HEX (AP) (EFF REV LTR K)	2	
	P313-0045-000	2	NUT,PLAIN,HEX SST, 6-32 (77250) 313-0045-000 (AP)	2	

GROUP ASSEMBLY PARTS LIST

FIG-ITEM	PART NO	INDENT	DESCRIPTION	UNITS PER ASSY	USABLE ON CODE
24-	MS35338-136	2	WASHER,LOCK SST, 0.141 ID X 0.250 OD (96906) 310-0282-000 (AP) (EFF TO REV LTR K)	4	
	310-0046-000	2	WASHER,FLAT SST, 0.147 ID X 0.312 OD (79807) (AP) (EFF REV LTR K)	4	
	MS51957-29	2	SCREW,MACH SST, 6-32 X 7/16 (96906) 343-0170-000 (AP) (EFF REV LTR K)	4	
20	638-2234-001	2	COVER, CABLE	1	
	MS51957-27	2	SCREW,MACH SST, 6-32 X 5/16 (96906) 343-0168-000 (AP)	2	
	MS51957-28	2	SCREW,MACH SST, 6-32 X 3/8 (96906) 343-0169-000 (AP)	2	
	MS51959-12	2	SCREW,MACH SST, 4-40 X 3/16 (96906) 342-0043-000 (AP)	2	
21	638-2414-001	2	CABLE ASSY, REMOTE TUNE	1	
	6BNY40	2	NUT,SLFLKG,HEX AL, 4-40 (72962) 333-0347-000 (AP)	2	
	MS51959-15	2	SCREW,MACH SST, 4-40 X 3/8 (96906) 342-0046-000 (AP)	2	
22	DCSP111500-28	3	CONNECTOR ASSY (71468) 426-0084-010	1	
23	88331-7	3	CONNECTOR,RCPT ELEC (00779) 372-2648-070	1	
24	638-2415-001	2	CABLE ASSY, IEEE- 488 (EFF TO REV LTR J)	1	
24	426-0091-010	2	CABLE ASSEMBLY, IEEE-488 (EFF REV LTR J)	1	
	552633-2	2	MTG POST KIT (00779) 372-0018-720 (AP)	1	
25	2-552474-1	3	RECEPTACLE ELEC (00779) 372-0018-710	1	
26	1-552098-1	3	RCPT,STRN RLF ELEC (00779) 372-0018-130	2	
27	86905-1	3	CONNECTOR,RCPT ELEC (00779) 372-2648-050	1	
28	638-2239-001	2	CHASSIS, INTERIOR-PRSD	1	
29	5S5-8	3	STUD,TURNLOCK FSTNR, CD PL STL, 0.128 DIA X 0.384 (71286) 012-3160-000	4	
	5S3-1	3	WASHER,SPLIT CD PL STL, 0.156 ID X 0.274 OD (71286) 012-2765-000 (AP)	4	
30	F12NCFMA2-62	3	NUT,SLFLKG CD PL STL, 6-32 (72962) 333-0842-000	18	
31	F22NCFMA2-26	3	NUT,SLFLKG CD PL STL, 2-56 (72962) 333-0838-000	2	
32	5P2-1	3	RECEPTACLE,TURN (71286) 012-2786-000	2	
32	MS20426AD3-3	3	RIVET,SOLID AL, 3/32 DIA X 3/16 (96906) 305-1361-000	4	
33	638-2239-002	3	CHASSIS, WELDED	1	

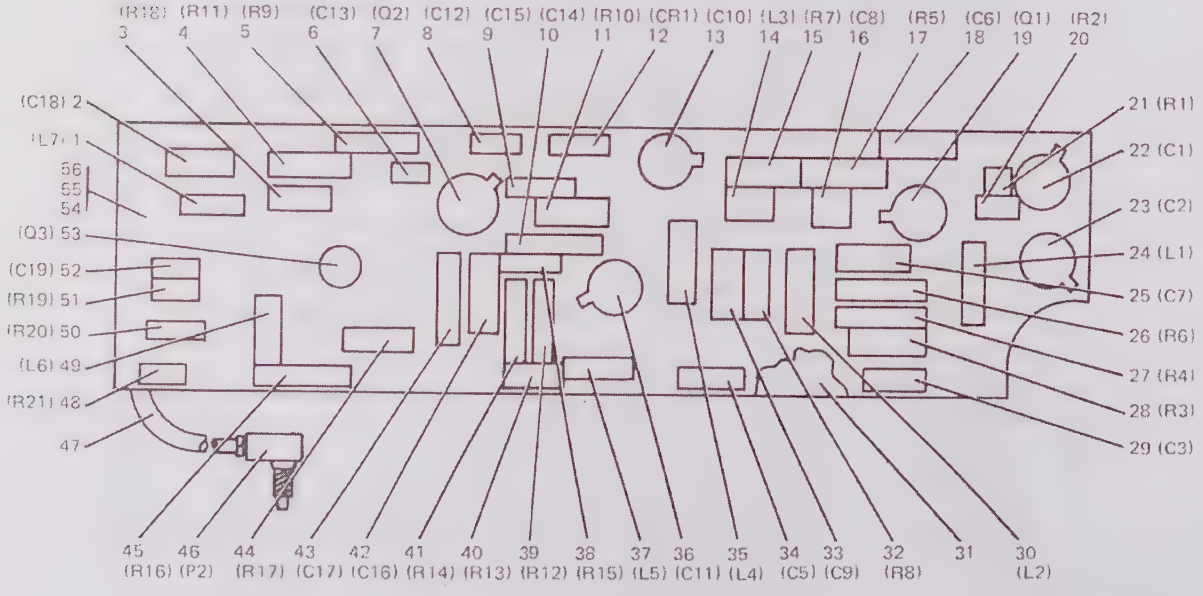

TP5-6209-019

Output Amplifier Board A4A3
Figure 25

GROUP ASSEMBLY PARTS LIST

FIG-ITEM	PART NO	INDENT	DESCRIPTION	UNITS PER ASSY	USABLE ON CODE
25-	634-9681-001	1	OUTPUT AMPLIFIER BOARD A4A2 (SEE FIG 13-18 FOR NHA)	REF	
1	VK20020-4B	2	COIL,RF 0.85K, PORM20% (02114) 240-2679-040 A4A2L7	1	
2	471KMSX200	2	CAPACITOR,FXD CER DIEL, 470PF, 10%, 100V (29990) 914-3098-640 A4A2C18	1	
3	RCR05G110JS	2	RESISTOR,FXD CMPSN, 11 OHMS, 5%, 1/8W (81349) 745-1863-020 A4A2R18	1	
4	RN55D3161F	2	RESISTOR,FXD FILM, 3.16K, 1%, 1/8W (81349) 705-1020-000 A4A2R11	1	
5	RWR81S39R0FR	2	RESISTOR,FXD 39 OHMS, 1%, 1W (81349) 747-2183-980 A4A2R9	1	
6	CK05BX102K	2	CAPACITOR,FXD CER DIEL, 1000PF, 10%, 200V (81349) 913-4018-000 A4A2C13	1	
7	2N2907A	2	TRANSISTOR (15818) 352-0551-010 A4A2Q2	1	
8	CK05BX102K	2	CAPACITOR,FXD CER DIEL, 1000PF, 10%, 200V (81349) 913-4018-000 A4A2C12	1	
9	CK05BX102K	2	CAPACITOR,FXD CER DIEL, 1000PF, 10%, 200V (81349) 913-4018-000 A4A2C15	1	
10	CK05BX102K	2	CAPACITOR,FXD CER DIEL, 1000PF, 10%, 200V (81349) 913-4018-000 A4A2C14	1	
11	RN55D7870F	2	RESISTOR,FXD FILM, 787 OHMS, 1%, 1/8W (81349) 705-0991-000 A4A2R10	1	
12	1N4454GE	2	SEMICOND DEVICE (03508) 353-3644-010 A4A2CR1	1	
13	518-024A2-5-9PF	2	CAPACITOR,VAR CER DIEL, 2.5 TO 9PF, 100V (72982) 917-1256-010 A4A2C10	1	
14	634-9728-003	2	COIL, RF A4A2L3	1	
15	RCR05G181JS	2	RESISTOR,FXD CMPSN, 180 OHMS, 5%, 1/8W (81349) 745-1863-310 A4A2R7	1	
16	471KMSX200	2	CAPACITOR,FXD CER DIEL, 470PF, 10%, 100V (29990) 914-3098-640 A4A2C8	1	
17	RCR07G680JS	2	RESISTOR,FXD CMPSN, 68 OHMS, 5%, 1/4W (81349) 745-0706-000 A4A2R5	1	
18	471KMSX200	2	CAPACITOR,FXD CER DIEL, 470PF, 10%, 100V (29990) 914-3098-640 A4A2C6	1	
19	LT3005	2	SEMICOND DEVICE (01281) 352-1185-010 A4A2Q1	1	
19	MS35333-106	2	WASHER,LOCK CD PL BRZ, 0.176 ID X 0.340 OD (96906) 373-3030-000 (AP)	1	
20	RCR05G100JS	2	RESISTOR,FXD CMPSN, 10 OHMS, 5%, 1/8W (81349) 745-1863-010 A4A2R2	1	
21	RCR05G101JS	2	RESISTOR,FXD CMPSN, 100 OHMS, 5%, 1/8W (81349) 745-1863-250 A4A2R1	1	
22	518-024A5-25PF	2	CAPACITOR,VAR CER DIEL, 5 TO 25PF, 100V (72982) 917-1256-030 A4A2C1	1	
23	518-024A2-5-9PF	2	CAPACITOR,VAR CER DIEL, 2.5 TO 9PF, 100V (72982) 917-1256-010 A4A2C2	1	
24	VK20020-4B	2	COIL,RF 0.85K, PORM20% (02114) 240-2679-040 A4A2L1	1	
25	471KMSX200	2	CAPACITOR,FXD CER DIEL, 470PF, 10%, 100V (29990) 914-3098-640 A4A2C7	1	
26	RCR07G680JS	2	RESISTOR,FXD CMPSN, 68 OHMS, 5%, 1/4W (81349) 745-0706-000 A4A2R6	1	
27	RN55D3090F	2	RESISTOR,FXD FILM, 309 OHMS, 1%, 1/8W (81349) 705-3600-720 A4A2R4	1	
28	RN55D1001F	2	RESISTOR,FXD FILM, 1K, 1%, 1/8W (81349) 705-0996-000 A4A2R3	1	
29	471KMSX200	2	CAPACITOR,FXD CER DIEL, 470PF, 10%, 100V (29990) 914-3098-640 A4A2C3	1	
30	MS75087-3	2	COIL,RF 0.15UH (96906) 240-2715-030 A4A2L2	1	
31	634-9727-001	2	HEATSINK	1	
	MS51957-3	2	SCREW,MACH CD PL STL, 2-56 X 1/4 (96906) 343-0124-000 (AP)	2	
	NAS620C2	2	WASHER,FLAT PSVT CRES, 0.089 ID X 0.149 OD (80205) 310-0740-080 (AP)	2	

GROUP ASSEMBLY PARTS LIST

FIG-ITEM	PART NO	INDENT	DESCRIPTION	UNITS PER ASSY	USABLE ON CODE
25-32	RCR07G100JS	2	RESISTOR,FXD CMPSN, 10 OHMS, 5%, 1/4W (81349) 745-0676-000 A4A2R8	1	
33	CK05BX103K	2	CAPACITOR,FXD CER DIEL, 0.01UF, FORM10%, 100V (81349) 913-5019-200 A4A2C9	1	
34	471KMSX200	2	CAPACITOR,FXD CER DIEL, 470PF, 10%, 100V (29990) 914-3098-640 A4A2C5	1	
35	634-9737-001	2	COIL, RF A4A2L4	1	
36	518-024A2-5-9PF	2	CAPACITOR,VAR CER DIEL, 2.5 TO 9PF, 100V (72982) 917-1256-010 A4A2C11	1	
37	634-9728-002	2	COIL, RF A4A2L5	1	
38	RCR05G102JS	2	RESISTOR,FXD CMPSN, 1K, 5%, 1/8W (81349) 745-1863-490 A4A2R15	1	
39	RCR05G151JS	2	RESISTOR,FXD CMPSN, 150 OHMS, 5%, 1/8W (81349) 745-1863-290 A4A2R12	1	
40	RCR05G360JS	2	RESISTOR,FXD CMPSN, 36 OHMS, 5%, 1/8W (81349) 745-1863-140 A4A2R13	1	
41	RCR05G151JS	2	RESISTOR,FXD CMPSN, 150 OHMS, 5%, 1/8W (81349) 745-1863-290 A4A2R14	1	
42	471KMSX200	2	CAPACITOR,FXD CER DIEL, 470PF, 10%, 100V (29990) 914-3098-640 A4A2C16	1	
43	471KMSX200	2	CAPACITOR,FXD CER DIEL, 470PF, 10%, 100V (29990) 914-3098-640 A4A2C17	1	
44	RCR05G110JS	2	RESISTOR,FXD CMPSN, 11 OHMS, 5%, 1/8W (81349) 745-1863-020 A4A2R17	1	
45	RCR05G181JS	2	RESISTOR,FXD CMPSN, 180 OHMS, 5%, 1/8W (81349) 745-1863-310 A4A2R16	1	
46	52-312-9040	2	CONNECTOR,RCPT ELEC (98291) 357-7207-220 A4A2P2	1	
47	RG178BU	2	CABLE,RF (81349) 425-1538-000	1	
48	RCR05G221JS	2	RESISTOR,FXD CMPSN, 220 OHMS, 5%, 1/8W (81349) 745-1863-330 A4A2R21	1	
49	634-9728-002	2	COIL, RF A4A2L6	1	
50	RCR05G240JS	2	RESISTOR,FXD CMPSN, 24 OHMS, 5%, 1/8W (81349) 745-1863-100 A4A2R20	1	
51	RCR05G221JS	2	RESISTOR,FXD CMPSN, 220 OHMS, 5%, 1/8W (81349) 745-1863-330 A4A2R19	1	
52	471KMSX200	2	CAPACITOR,FXD CER DIEL, 470PF, 10%, 100V (29990) 914-3098-640 A4A2C19	1	
53	LT3005	2	SEMICOND DEVICE (01281) 352-1185-010 A4A2Q3	1	
	MS35333-106	2	WASHER,LOCK CD PL BRZ, 0.176 ID X 0.340 OD (96906) 373-3030-000 (AP)	1	
54	634-9724-001	2	CIRCUIT BOARD	1	
55	372-2601-027	3	CONTACT,ELEC	5	
56	634-9724-002	3	CIRCUIT BOARD	1	

GROUP ASSEMBLY PARTS LIST

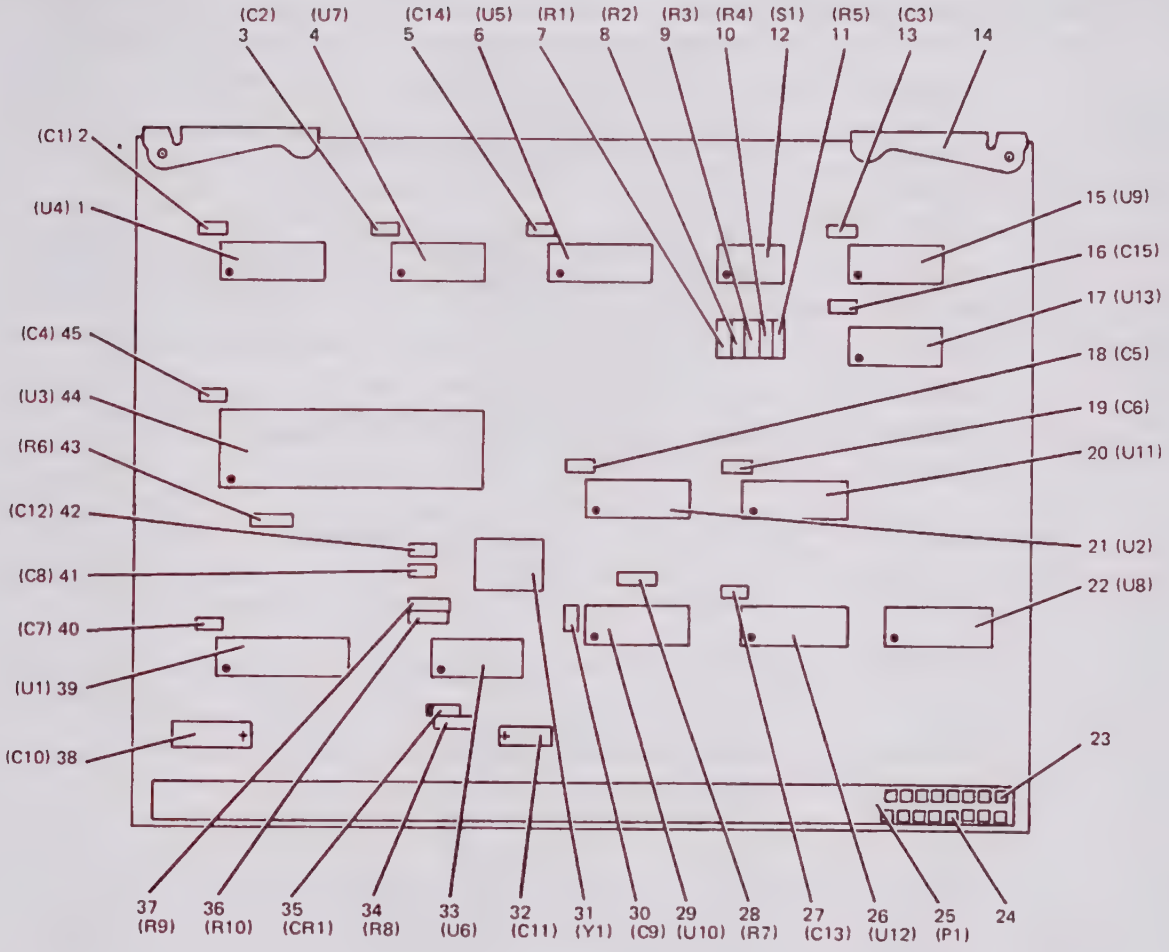

ELECTROSTATIC SENSITIVE DEVICES

TP5–6599–019

IEEE-488/1978 Bus Interface Assembly A10
Figure 26

GROUP ASSEMBLY PARTS LIST

FIG-ITEM	PART NO	INDENT	DESCRIPTION	UNITS PER ASSY	USABLE ON CODE
26-	601-2309-001	1	IEEE-488/1978 BUS INTERFACE ASSEMBLY (ESDS) A10 (SEE FIG 1-3 FOR NHA)	REF	
1	SN74LS138N	2	INTEGRATED CIRCUIT DECODER (04713) 351-1526-030 A10U4	1	
2	CK05BX103K	2	CAPACITOR,FXD CER DIEL, 0.01UF, PORM10%, 100V (81349) 913-5019-200 A10C1	1	
3	CK05BX103K	2	CAPACITOR,FXD CER DIEL, 0.01UF, PORM10%, 100V (81349) 913-5019-200 A10C2	1	
4	N74LS08N	2	INTEGRATED CIRCUIT LOGIC GATE (18324) 351-1523-120 A10U7	1	
5	CK05BX103K	2	CAPACITOR,FXD CER DIEL, 0.01UF, PORM10%, 100V (81349) 913-5019-200 A10C14	1	
6	DM74LS367N	2	INTEGRATED CIRCUIT BUFFER (27014) 351-1795-020 A10U5	1	
7	RCR07G472KS	2	RESISTOR,FXD CMPSN, 4.7K, 10%, 1/4W (81349) 745-0773-000 A10R1	1	
8	RCR07G472KS	2	RESISTOR,FXD CMPSN, 4.7K, 10%, 1/4W (81349) 745-0773-000 A10R2	1	
9	RCR07G472KS	2	RESISTOR,FXD CMPSN, 4.7K, 10%, 1/4W (81349) 745-0773-000 A10R3	1	
10	RCR07G472KS	2	RESISTOR,FXD CMPSN, 4.7K, 10%, 1/4W (81349) 745-0773-000 A10R4	1	
11	RCR07G472KS	2	RESISTOR,FXD CMPSN, 4.7K, 10%, 1/4W (81349) 745-0773-000 A10R5	1	
12	01-70-0305	2	SWITCH,DUAL PKG (27264) 266-0243-020 A10S1	1	
13	CK05BX103K	2	CAPACITOR,FXD CER DIEL, 0.01UF, PORM10%, 100V (81349) 913-5019-200 A10C3	1	
14	617-8088-001	2	EXTRACTOR, CIRCUIT CARD	2	
	MS16562-199	2	PIN,SPR SST, 0.078 DIA X 1/4 (96906) 311-0355-000 (AP)	2	
	609-9790-001	2	WASHER (AP)	4	
15	SN74LS74AN	2	INTEGRATED CIRCUIT FLIP FLOP (04713) 351-1525-040 A10U9	1	
16	CK05BX103K	2	CAPACITOR,FXD CER DIEL, 0.01UF, PORM10%, 100V (81349) 913-5019-200 A10C15	1	
17	N74LS32N	2	INTEGRATED CIRCUIT LOGIC GATE (18324) 351-1523-260 A10U13	1	
18	CK05BX103K	2	CAPACITOR,FXD CER DIEL, 0.01UF, PORM10%, 100V (81349) 913-5019-200 A10C5	1	
19	CK05BX103K	2	CAPACITOR,FXD CER DIEL, 0.01UF, PORM10%, 100V (81349) 913-5019-200 A10C6	1	
20	MC3448AP	2	INTEGRATED CIRCUIT (04713) 351-1393-010 A10U11	1	
21	MC3448AP	2	INTEGRATED CIRCUIT (04713) 351-1393-010 A10U2	1	
22	DM74191N	2	INTEGRATED CIRCUIT (27014) 351-7761-020 A10U8	1	
23	372-2234-020	2	CONTACT,ELEC	64	
24	372-2234-010	2	CONTACT,ELEC	65	
25	372-2622-074	2	HOUSING,CONN A10P1	1	
26	MC3448AP	2	INTEGRATED CIRCUIT (04713) 351-1393-010 A10U12	1	
27	CK05BX103K	2	CAPACITOR,FXD CER DIEL, 0.01UF, PORM10%, 100V (81349) 913-5019-200 A10C13	1	
28	RCR07G152KS	2	RESISTOR,FXD CMPSN, 1.5K, 10%, 1/4W (81349) 745-0755-000 A10R7	1	
29	MC3448AP	2	INTEGRATED CIRCUIT (04713) 351-1393-010 A10U10	1	
30	CK05BX103K	2	CAPACITOR,FXD CER DIEL, 0.01UF, PORM10%, 100V (81349) 913-5019-200 A10C9	1	
31	CR64AU16-0000MHZ	2	CRYSTAL UNIT,QTZ 16.00000MHZ (81349) 289-7082-010 A10Y1	1	
32	M39003-01-2254	2	CAPACITOR,FXD ELCTLT, 4.7UF, 10%, 10V (81349) 184-9086-140 A10C11	1	
33	N74LS04N	2	INTEGRATED CIRCUIT LOGIC GATE (18324) 351-1523-090 A10U6	1	
34	RCR07G103KS	2	RESISTOR,FXD CMPSN, 10K, 10%, 1/4W (81349) 745-0785-000 A10R8	1	
35	1N4454GE	2	SEMICOND DEVICE (03508) 353-3644-010 A10CR1	1	

GROUP ASSEMBLY PARTS LIST

FIG-ITEM	PART NO	INDENT	DESCRIPTION	UNITS PER ASSY	USABLE ON CODE
26-36	RCR07G471KS	2	RESISTOR,FXD CMPSN, 470 OHMS, 10%, 1/4W (81349) 745-0737-000 A10R10	1	
37	RCR07G471KS	2	RESISTOR,FXD CMPSN, 470 OHMS, 10%, 1/4W (81349) 745-0737-000 A10R9	1	
38	M39003-01-2286	2	CAPACITOR,FXD ELCTLT, 10UF, 10%, 20V (81349) 184-9086-460 A10C10	1	
39	SN74LS245N	2	INTEGRATED CIRCUIT TRANSCEIVER (01295) 351-1849-020 A10U1	1	
40	CK05BX103K	2	CAPACITOR,FXD CER DIEL, 0.01UF, PORM10%, 100V (81349) 913-5019-200 A10C7	1	
41	CK05BX103K	2	CAPACITOR,FXD CER DIEL, 0.01UF, PORM10%, 100V (81349) 913-5019-200 A10C8	1	
42	CK05BX270K	2	CAPACITOR,FXD CER DIEL, 27PF, PORM10%, 200V (81349) 913-5019-060 A10C12	1	
43	RCR07G152KS	2	RESISTOR,FXD CMPSN, 1.5K, 10%, 1/4W (81349) 745-0755-000 A10R6	1	
44	D8291	2	INTEGRATED CIRCUIT SIO INTERFACE (ESDS) (34696) 351-8679-010 A10U3	1	
45	CK05BX103K	2	CAPACITOR,FXD CER DIEL, 0.01UF, PORM10%, 100V (81349) 913-5019-200 A10C4	1	

3. NUMERICAL INDEX

PART NUMBER	FIG-ITEM	TTL REQ
A0397-1A	10-81	
	10-83	
	10-84	3
AD11-125	8-166	1
AD562HQBIN	8-151	1
AFF700	13-14	1
AM9111BPC	6-51	
	6-54	
	6-55	
	6-56	
	6-57	
	6-83	
	6-85	
	6-86	8
AN366DF632A	9-9	2
A10040-105	23-5	1
A1944BPSHT	14-28	2
C0+053BE	7-88	
	7-96	2
CK05BX101K	7-7	
	7-15	
	7-56	
	7-64	
	7-76	
	7-131	
	7-133	7
CK05BX102K	7-9	
	7-11	
	7-14	
	7-27	
	15-2	
	15-5	
	15-14	
	15-17	
	15-50	
	15-59	
	15-65	
	15-68	
	15-86	
	15-99	
	15-105	
	15-106	
	15-109	
	15-110	
	15-127	
	15-139	
	15-144	
	15-145	
	15-147	
	15-148	
	15-150	
	15-153	
	15-155	
	15-157	
	15-161	
	15-162	
CK05BX102K	16-8	
	16-12	
	16-21	
	16-26	
	16-27	
	25-6	
	25-8	
	25-9	
	25-10	39
CK05BX103K	3-7	
	3-34	
	3-70	
	3-72	
	3-77	
	3-83	
	3-87	
	3-90	
	3-95	
	3-98	
	3-102	
	3-104	
	3-108	
	3-118	
	3-127	
	3-138	
	3-141	
	6-46	
	8-172	
	11-172	
	15-73	
	15-76	
	15-77	
	15-90	
	23-11	
	23-17	
	23-21	
	23-23	
	23-30	
	23-33	
	23-35	
	25-33	
	26-2	
	26-3	
	26-5	
	26-13	
	26-16	
	26-18	
	26-19	
	26-27	
	26-30	
	26-40	
	26-41	
	26-45	44
CK05BX104K	6-3	
	6-19	
	6-21	

NUMERICAL INDEX

PART NUMBER	FIG-ITEM	TTL REQ
CK05BX104K	6-22	
	6-30	
	6-31	
	6-34	
	6-37	
	6-43	
	6-52	
	6-59	
	6-61	
	6-67	
	6-84	
	6-87	
	10-6	
	10-10	
	10-28	18
CK05BX150K	7-26	
	7-33	
	7-39	
	7-107	
	8-142	5
CK05BX221K	23-10	1
CK05BX222K	7-31	
	7-35	2
CK05BX270K	6-88	
	7-26	
	26-42	3
CK05BX330K	7-104	
	8-158	2
CK05BX332K	7-53	1
CK05BX470K	7-29A	1
CK05BX471K	15-24	
	15-25	
	15-27	
	15-114	
	15-122	
	15-137	
	19-34	
	19-48	
	22-57	
	22-65	10
CK05BX560K	7-29A	1
CK06BX104K	7-21	
	7-41	
	7-42	
	7-46	
	7-123	
	8-20	
	8-25	
	8-30	
	8-36	
	8-49	
	8-59	
	8-66	
	8-73	
	8-107	
	8-108	
	8-116	
	8-120	
	8-127	
	8-128	
	8-134	
	8-141	
	8-143	
CK06BX104K	8-147	
	8-149	
	8-154	
	8-155	
	8-162	
	8-163	
	8-170	
	8-171	
	8-175	
	11-14	
	11-141	
	13-2	
	13-3	
	15-11	
	15-20	
	15-45	
	15-49	
	15-56	
	19-14	
	19-19	
	19-22	
	19-27	
	19-28	
	19-31	
	19-40	
	19-44	
	19-46	
	21-5	
	21-9	
	21-13	
	21-19	
	21-22	
	21-39	
	21-46	
	22-2	
	22-22	
	22-27	
	22-29	
	22-56	
	22-63	
	22-73	
	22-77	64
CK06BX224K	19-17	
	19-20	2
CK06BX474K	13-8	1
CK62AW472M	17-24	
	17-25	
	17-27	
	17-28	4
CM07FD103J03	7-22	1
CM7219	3-1	
	3-2	
	3-3	
	3-4	
	3-5	
	3-9	
	3-12	
	3-13	
	3-27	
	3-31	
	3-50	
	3-57	
	3-58	

NUMERICAL INDEX

PART NUMBER	FIG-ITEM	TTL REQ
CM7219	3-64	
	3-65	
	3-66	
	3-68	17
CR64AU16-0000MHZ	6-49	
	8-79	
	26-31	3
CY30C105M	11-13	
	11-16	
	11-17	
	11-22	
	11-24	
	11-37	
	11-44	
	11-51	
	11-57	
	11-58	
	11-69	
	11-78	
	11-80	
	11-85	
	11-113	
	11-116	
	11-118	
	11-120	
	11-140	
	11-143	
	11-144	
	11-145	
	11-150	
	11-154	
	11-156	
	11-160	
	11-161	
	11-165	
	11-168	
	12-1	
	12-5	
	12-7	
	12-12	
	12-17	
	12-18	
	12-32	
	12-42	
	12-51	
	12-57	39
C114-1	10-58	1
DCMF27W2S	14-1	1
DCM27W2PB	11-129	1
DCSP111500-28	24-22	1
DC51-01	3-8	
	3-10	
	3-11	
	3-15	
	3-16	
	3-17	
	3-18	
	3-19	
	3-20	
	3-21	
	3-22	
	3-28	
	3-29	
DC51-01	3-30	
	3-39	
	3-40	
	3-41	
	3-42	
	3-48	
	3-49	
	3-51	
	3-52	
	3-53	
	3-54	
	3-55	
	3-59	
	3-60	
	3-61	
	3-62	29
DC51-64	3-1	
	3-2	
	3-3	
	3-4	
	3-5	
	3-9	
	3-12	
	3-13	
	3-27	
	3-31	
	3-50	
	3-57	
	3-58	
	3-64	
	3-65	
	3-66	
	3-68	17
DDU50PB	12-73	1
DM115	19-25	
	20-6	
	20-7	3
DM15F511J300WV4CR	11-119	
	11-146	2
DM20FD222J04CR	7-109	1
DM5C040D300WV	8-80	1
DM5C050D300WV	11-34	
	11-42	
	11-54	
	11-145A	4
DM5C100D300WV	11-42	
	11-110	
	11-111	
	11-163	4
DM5E200D100WV	11-32	
	11-121	2
DM5E300J050WV	13-17	
	15-118	2
DM5E330J050WV	11-40A	
	15-132	
	22-62	3
DM5E510J050WV	11-29	
	11-33	
	11-122	
	11-131A	
	11-157	
	15-4	

NUMERICAL INDEX

PART NUMBER	FIG-ITEM	TTL REQ
DM5E510J050WV	15-19	7
DM5F101J050WV	8-88	
	11-131A	
	15-141	
	15-142	4
DM5F151J050WV	11-21	
	11-71	
	11-77	
	11-86	
	15-92	5
DM5F221J050WV	7-117	1
DM5F301J050WV	15-84	
	15-85	
	22-66	3
DM5F331J050WV	12-47	1
DM5F401J050WV	7-118	1
DM53740-5000	11-115	1
DM53743-5000	14-2	2
DM5407J	12-72	1
DM74LS02N	3-115	
	8-19	
	8-21	
	8-33	
	8-57	
	8-117	
	12-46	
	15-108	8
DM74LS10N	3-143	1
DM74LS367N	26-6	1
DM74S112N	12-28	
	12-29	2
DM74126N	8-65	
	8-67	2
DM74155N	8-18	
	8-53	2
DM74157N	8-69	1
DM74175N	8-43	
	8-54	
	8-179	3
DM74191N	26-22	1
DM7447AN	3-107	
	3-111	
	3-112	
	3-117	
	3-120	
	3-122	
	3-125	
	3-126	
	3-129	
	3-132	
	3-134	
	3-136	
	3-137	
	3-140	14
DM7489J	8-1	
	8-5	
	8-8	
	8-11	
	8-16	
	8-34	
	8-63	
	8-68	
	8-99	

PART NUMBER	FIG-ITEM	TTL REQ
DM7489J	8-119	10
D1L8Z40P1	6-17	1
D53018	12-73	2
D8291	26-44	1
EAC301	17-26	1
ER3400	22-7	
	22-9	
	22-11	
	22-49	
	22-54	
	22-71	6
ER3401	22-7	
	22-9	
	22-11	
	22-49	
	22-54	
	22-71	6
FL38GW1ED3-0001	10-80	
	10-82	
	14-4	
	14-5	
	14-6	
	14-7	
	14-8	
	14-9	
	14-10	
	14-11	
	14-12	
	14-13	
	14-14	
	14-15	
	14-16	
	14-17	
	14-18	
	14-19	
	14-20	
	14-21	
	14-22	
	14-23	
	14-24	23
FM04-125V-1-2A	18-19	
	18-20	2
F02A250V4AS	17-17	1
F02A32V20AS	18-9	1
F1-12H4	2-46	
	2-49	2
F12NCFMA2-62	1-14	
	1-19	
	17-37	
	18-26	
	24-8	
	24-30	54
F22NCFMA2-26	24-31	2
F4049BPC	6-45	
	7-6	
	7-54	
	7-127	
	7-128	5
F4052PC	11-1	
	11-171	2
G2522	13-31	1
HA2-2625-5	11-35	
	11-123	

NUMERICAL INDEX

PART NUMBER	FIG-ITEM	TTL REQ
HA2-2625-5	11-142	
	11-155	4
HKPH	17-18	1
JAN1N963B	15-9	1
KC89-93	1-2A	1
KN19-154M06	24-13	1
LM101AH	7-17	
	7-25	
	7-34	
	7-40	
	7-74	
	7-105	
	7-108	
	8-159	
	11-112	
	11-151	
	11-162	11
LM108AH	11-23	
	11-68	
	11-75	
	11-84	4
LM108H	7-59	
	7-66	
	7-134	
	7-141	4
LM118H	11-142	1
LM218H	11-15	
	11-52	
	11-61	
	11-142	4
LM299H	11-67	1
LM318H	7-12	
	7-52	2
LM320T15	19-15	1
LP88A1A104G	11-106	1
LP88A1A105J	11-159	1
LP88A1A394G	11-102	1
LP88A1A565J	11-30	1
LT3005	25-19	
	25-53	2
LVA100A	22-35	1
MA22130J	10-18	1
MCR649AP2	19-25	1
MC12014P	15-66	1
MC1408L-8	8-150	1
MC1536U	22-31	1
MC3441AP	23-19	
	23-20	
	23-22	
	23-25	4
MC3448AP	26-20	
	26-21	
	26-26	
	26-29	4
MC386X2-002W	13-4	1
MC7404P	6-7	
	8-15	
	8-85	
	8-123	4
MC9602CEBJC	22-76	1
MK7200-06	13-30	2
MS14046-4	8-109	
	8-111	2
MS15795-803	5-1	
	5-2	
	5-6	
	24-15	9
MS16535-158	18-22	1
MS16562-199	21-1	
	22-1	
	23-15	
	26-14	8
MS18130-1	8-114	
	8-115	2
MS20426AD3-3	5-9	
	9-9	
	24-32	16
MS3367-5-9	18-11	2
MS35333-106	25-19	
	25-53	2
MS35333-73	17-11	
	17-13	
	17-15	6
MS35338-101	18-1	
	18-3	2
MS35338-134	2-57	
	2-58	
	10-81	
	10-83	
	10-84	11
MS35338-135	2-25	
	2-62	
	2-63	
	5-1	
	5-2	
	5-6	
	9-2	
	9-4	
	9-5	
	10-1	
	12-73	
	12-74	
	15-37	
	15-41	
	17-22	
	17-26	
	19-15	
	19-18	
	19-21	
	20-1	
	20-2	
	20-8	
	24-15	
	24-15	78
MS35338-136	17-29	
	18-13	
	18-16	
	19-24	
	19-25	
	19-33	
	20-6	
	20-7	
	24-15	
	24-19	29
MS35338-137	1-7	
	17-4	10

NUMERICAL INDEX

PART NUMBER	FIG-ITEM	TTL REQ
MS35338-138	1-12	
	18-2	
	18-12	6
MS35489-35	18-18	2
MS35649-244	17-26	
	19-15	
	19-18	
	19-21	7
MS35649-284	17-4	3
MS35650-304	18-2	
	18-12	2
MS51957-11	16-21C	1
MS51957-12	10-1	
	11-129	
	13-1	
	13-27	
	17-22	
	24-15	34
MS51957-13	2-62	
	5-1	
	5-2	
	9-2	
	9-4	
	12-74	
	13-4	
	13-27	
	20-1	
	24-15	38
MS51957-14	2-63	
	13-27	
	14-26	8
MS51957-15	9-2	
	9-5	
	19-18	
	19-21	
	20-2	10
MS51957-16	15-37	
	15-41	
	19-15	5
MS51957-17	17-26	
	24-1	6
MS51957-18	5-6	2
MS51957-19	24-15	1
MS51957-2	1-1	
	2-57	
	2-58	
	13-16	18
MS51957-22	9-3	4
MS51957-26	18-15	2
MS51957-27	1-5	
	1-13	
	17-1	
	17-5	
	17-29	
	17-35	
	18-13	
	24-4	
	24-7	
	24-20	29
MS51957-28	1-2A	
	1-6	
	1-13	
	17-16	
MS51957-28	17-19	
	17-35	
	19-33	
	24-20	20
MS51957-29	19-24	
	24-19	6
MS51957-3	25-31	2
MS51957-30	18-16	
	19-25	4
MS51957-31	20-6	
	20-7	4
MS51957-32	24-15	4
MS51957-38	17-34	2
MS51957-4	14-1	2
MS51957-41	24-10	2
MS51957-43	17-4	3
MS51957-44	17-4	
	17-10	
	17-14	7
MS51957-52	1-7	4
MS51958-59	17-11	2
MS51958-61	17-13	
	17-15	4
MS51958-63	1-12	4
MS51959-12	24-20	2
MS51959-13	17-7	4
MS51959-15	24-11	
	24-18	
	24-21	10
MS51959-27	1-5	
	1-18	
	2-54	
	17-1	
	17-5	18
MS51959-29	17-15	2
MS75083-03	15-121	1
MS75083-13	13-19	1
MS75084-07	15-112	1
MS75084-08	16-20	1
MS75087-3	25-30	1
MS75088-13	7-43	
	7-47	2
MS75089-11	7-5	
	7-55	
	7-65	
	7-69	
	7-130	
	7-140	
	7-147	
	7-148	
	8-157	
	8-169	
	13-5	11
MS75089-12	7-23	1
MS75089-20	7-30	1
MS75089-22	7-32	1
MS75089-6	11-98	1
MV1401	15-10	
	15-80	
	15-81	3
MW1-265	18-1	
	18-3	4
MW562-203	18-2	

NUMERICAL INDEX

PART NUMBER	FIG-ITEM	TTL REQ
MN562-203	18-12	4
M15733-52-0003	13-23	
	13-24	
	13-25	
	13-26	4
M39003-01-2254	15-32	
	23-4	
	23-27	
	26-32	4
M39003-01-2257	3-142	1
M39003-01-2261	8-112	
	8-113	2
M39003-01-2265	19-37	
	19-38	2
M39003-01-2274	15-123	
	22-41	2
M39003-01-2286	7-4	
	7-57	
	7-129	
	7-132	
	21-41	
	21-42	
	21-43	
	22-59	
	22-79	
	23-4	
	23-27	
	26-33	12
M39003-01-2289	6-29	
	6-65	
	7-45	
	7-48	
	8-105	
	8-106	
	15-26	7
M39003-01-2295	19-43	1
M39003-01-2304	15-28	
	15-107	
	19-13	3
M39003-01-2306	15-47	
	15-48	2
M39003-01-2312	13-9	
	13-10	
	15-54	
	15-124	4
M39003-01-2356	19-16	1
M39012-67-0003	14-25	1
M39012-79-3005	1-11	1
M39018-03-0732	18-10	1
M39018-03-0741	18-11	1
M39024-11-01	19-53	
	19-54	2
M6-476D	18-17	2
M6E	10-64	
	10-64	2
NAS620C2	25-31	2
NAS620C4	12-73	
	12-74	6
NE15F01-0003-00	2-58	1
N74LS00N	3-71	
	6-32	
	8-14	
	8-22	
N74LS00N	8-31	
	8-32	
	8-174	
	12-49	
	15-96	
	15-151	
	15-156	
	22-60	
	23-31	13
N74LS04N	6-62	
	22-69	
	23-37	
	26-33	4
N74LS08N	15-111	
	26-4	2
N74LS20N	22-5	1
N74LS32N	3-103	
	6-31A	
	6-60	
	6-70	
	21-51	
	26-17	6
N74161A	8-55	1
N8T97N	3-32	
	3-35	
	3-36	
	3-101	
	6-14	
	6-15	
	6-27	
	6-28	
	6-33	
	6-35	
	6-58	
	6-71	
	6-72	
	6-82	
	12-33	
	12-35	
	12-37	
	12-40	
	12-43	
	22-58	
	22-60	
	22-61	
	23-3	
	23-29	
	23-32	25
PA588	24-10	1
PE1S0-1-80-10	7-62	
	7-63	
	7-67	
	7-68	
	7-137	
	7-138	
	7-142	
	7-143	8
P313-0003-000	18-1	
	18-3	2
P313-0045-000	17-29	
	18-13	
	19-24	
	19-25	

NUMERICAL INDEX

PART NUMBER	FIG-ITEM	TTL REQ
P313-0045-000	19-33	
	20-6	
	20-7	
	24-15	
	24-19	19
P313-0050-000	10-81	
	10-83	
	10-84	
	13-14	
	13-18	
	14-1	10
P313-0132-000	2-25	
	2-56	
	3-144	
	15-37	
	15-41	
	18-17	
	24-15	20
P330-2290-000	2-25	2
P330-4058-030	1-18	4
P342-0145-000	13-27	2
P343-0183-000	17-34	2
P343-0299-000	13-14	
	13-18	4
P343-0304-000	13-18	3
P347-1268-000	17-21	2
P8255A	23-16	
	23-18	2
RCCS250437-1C	11-139	1
RCR05G100JS	10-9	
	10-14	
	16-25	
	25-20	4
RCR05G101JS	10-63	
	25-21	2
RCR05G102JS	10-63	AR
	25-38	1
RCR05G102KS	3-23	
	3-24	
	3-25	
	3-26	
	3-44	
	3-45	
	3-46	
	3-47	
	3-105	
	3-109	
	3-113	
	3-121	
	3-123	
	3-139	
	6-4	
	6-18	
	6-20	
	6-26	
	6-64	
	6-66	
	6-74	
	6-75	
	6-76	
	6-77	
	6-78	
	6-79	

PART NUMBER	FIG-ITEM	TTL REQ
RCR05G102KS	6-80	
	6-81	
	8-24	
	8-29	
	15-6	
	15-13	
	15-18	
	15-57	
	15-58	
	15-64	
	15-69	
	15-104	
	15-146	
	23-9A	
	23-36A	
	23-40A	42
RCR05G103KS	15-7	
	15-8	
	15-94	
	15-95	4
RCR05G104JS	15-71	
	15-72	
	15-78	
	15-79	4
RCR05G104KS	6-68	1
RCR05G110JS	25-3	
	25-44	2
RCR05G112JS	10-63	AR
RCR05G113JS	10-45	
	10-51	2
RCR05G120JS	15-133	
	16-18	2
RCR05G121JS	10-21	
	10-23	
	10-25	3
RCR05G132JS	10-63	AR
	15-88	1
RCR05G150JS	10-14	
	10-15	
	16-25A	3
RCR05G151JS	10-23	
	10-65	
	10-66	
	10-74	
	10-76	
	25-39	
	25-41	7
RCR05G151KS	4-11	
	4-13	
	4-14	
	4-16	
	4-17	
	4-19	
	4-23	
	4-25	8
RCR05G152KS	21-54	1
RCR05G162JS	10-63	AR
RCR05G180JS	16-5	1
RCR05G181JS	25-15	
	25-45	2
RCR05G183JS	10-43	
	10-53	2
RCR05G200JS	10-27	

NUMERICAL INDEX

PART NUMBER	FIG-ITEM	TTL REQ
RCR05G200JS	10-69	2
RCR05G201JS	10-63	AR
	15-117	1
RCR05G202JS	10-63	AR
RCR05G221JS	10-63	AR
	15-63	
	25-48	
	25-51	3
RCR05G222KS	15-3	
	15-89	2
RCR05G223JS	10-41	
	10-43	
	10-45	
	10-47	
	10-49	
	10-51	
	10-53	
	10-55	8
RCR05G240JS	25-50	1
RCR05G241JS	10-63	AR
	16-37	1
RCR05G242JS	10-63	AR
RCR05G271JS	10-63	AR
RCR05G301JS	10-63	AR
	16-6	
	16-31	2
RCR05G302JS	10-63	AR
RCR05G331JS	10-63	AR
RCR05G331KS	15-1	
	15-21	2
RCR05G360JS	10-67	
	10-73	
	25-40	3
RCR05G361JS	10-63	AR
RCR05G362JS	10-47	
	10-49	2
	10-63	AR
RCR05G391JS	10-63	AR
	15-62	1
RCR05G391KS	6-25	1
RCR05G430JS	13-15	1
RCR05G431JS	10-63	AR
	15-135	
	15-136	
	16-16	
	16-19	4
RCR05G432JS	10-63	AR
	15-12	1
RCR05G470KS	21-55	1
RCR05G471JS	10-63	AR
RCR05G471KS	6-47	
	6-48	2
RCR05G472KS	8-12	
	8-13	2
RCR05G474KS	8-97	
	8-101	
	8-102	
	8-103	
	8-104	5
RCR05G510JS	10-22	
	10-59	
	10-61A	
	12-21	

PART NUMBER	FIG-ITEM	TTL REQ
RCR05G510JS	15-120	5
RCR05G511JS	10-11	
	10-63	AR
	12-31	2
RCR05G512JS	10-63	AR
RCR05G561JS	10-63	AR
	12-20	1
RCR05G620JS	13-15	1
RCR05G621JS	10-63	AR
RCR05G662JS	15-87	1
RCR05G681JS	10-63	AR
RCR05G751JS	10-63	AR
RCR05G821JS	10-63	AR
RCR05G911JS	10-63	AR
RCR07G100JS	25-32	1
RCR07G101JS	16-1	1
RCR07G102JS	11-27	
	11-70	
	12-39	
	15-152	
	15-159	
	16-11	6
RCR07G102KS	7-36	
	12-3	
	12-9	
	12-10	
	12-13	
	12-30	
	12-50	
	12-60	
	12-61	
	19-29	
	22-18	
	22-40	
	23-1	
	23-2	
	23-6	
	23-13	
	23-26	
	23-38	
	23-39	
	23-40	20
RCR07G103KS	7-50	
	8-82	
	8-156	
	11-26	
	11-83	
	11-99	
	11-100	
	11-169	
	11-170	
	12-59	
	15-36	
	21-44	
	22-36	
	22-75	
	23-6	
	23-26	
	26-34	17
RCR07G104KS	7-1	
	7-8	
	7-61	
	7-139	

NUMERICAL INDEX

PART NUMBER	FIG-ITEM	TTL REQ
RCR07G104KS	7-144	
	11-81	
	11-82	
	11-166	
	11-167	9
RCR07G121KS	22-19	1
RCR07G151KS	15-46	
	15-51	2
RCR07G152JS	15-128	1
RCR07G152KS	7-3	
	7-58	
	7-106	
	7-135	
	26-28	
	26-43	6
RCR07G221KS	15-129	1
RCR07G222KS	7-122	1
RCR07G223KS	7-36	1
RCR07G241JS	13-20	1
RCR07G271KS	15-52	
	15-126	
	19-41	3
RCR07G272KS	7-16	
	22-37	2
RCR07G331JS	15-115	
	15-130	2
RCR07G331KS	7-13	1
RCR07G332JS	15-160	1
RCR07G333KS	8-87	
	11-117	2
RCR07G391KS	7-18	
	7-20	2
RCR07G470KS	7-24	
	7-37	
	7-38	
	22-16	4
RCR07G471KS	23-12	
	26-36	
	26-37	3
RCR07G472KS	7-146	
	8-83	
	8-146	
	26-7	
	26-8	
	26-9	
	26-10	
	26-11	8
RCR07G473KS	7-2	
	7-60	
	7-136	
	7-145	
	11-25	
	22-33	6
RCR07G474KS	7-100	
	7-101	
	7-103	
	7-111	
	7-112	
	7-113	6
RCR07G510JS	16-1	1
RCR07G511JS	15-134	1
RCR07G561KS	20-3	1
RCR07G680JS	25-17	
RCR07G680JS	25-26	2
RCR07G681KS	15-53	
	15-140	
	19-39	3
RCR07G822KS	11-55	
	11-62	2
RCR07G910JS	15-113	1
RCR20G102KS	22-44	1
RCR20G103KS	18-4	
	18-6	
	22-28	3
RCR42G102KS	17-11	1
RCR42G471KS	17-13	1
RG178BU	25-47	1
RM723T	15-125	
	19-32	
	19-47	3
RN55D---1F	13-6	AR
	13-7	AR
	13-11	AR
RN55D1001F	25-28	1
RN55D1002F	8-163	
	8-164	
	8-165	
	11-38	
	11-39	
	11-39	
	11-65	
	11-72	
	11-74	
	11-76	
	22-26	11
RN55D1003F	11-79	
	11-91	
	11-108	
	15-74	AR
	15-75	4
RN55D1053F	15-74	AR
RN55D1071F	16-29	1
RN55D1102F	11-31	1
RN55D1103F	15-74	AR
RN55D1133F	11-103	
	11-104	2
RN55D1212F	7-51	1
RN55D1271F	8-145	1
RN55D1302F	11-134	1
RN55D1402F	11-39	1
RN55D1403F	11-132	1
RN55D1501F	22-53	1
RN55D1503F	11-148	
	11-164	2
RN55D1542F	22-23	1
RN55D1651F	16-33	1
RN55D1782F	11-133	1
RN55D1871F	19-36	1
RN55D2003F	11-43	
	11-146A	2
RN55D2051F	15-102	1
RN55D2151F	11-49	
	19-42	2
RN55D2261F	15-29	1
RN55D2490F	16-14	1
RN55D2551F	11-19	

NUMERICAL INDEX

PART NUMBER	FIG-ITEM	TTL REQ
RN55D2551F	11-49	2
RN55D2742F	11-56	
	11-63	2
RN55D2871F	15-39	1
RN55D3013F	11-28	
	11-66	2
RN55D3090F	25-27	1
RN55D3161F	16-30	
	25-4	2
RN55D3241F	11-48	1
RN55D3320F	7-28	1
RN55D3321F	15-30	1
RN55D3831F	8-144	
	11-46	2
RN55D3832F	11-63	1
RN55D4021F	19-50	1
RN55D4120F	16-14	1
RN55D4221F	13-12	1
RN55D4421F	15-101	1
RN55D4531F	11-39	1
RN55D4640F	15-100	1
RN55D4642F	15-74	AR
RN55D4872F	15-74	AR
RN55D4992F	11-18	
	11-109	2
RN55D5111F	11-7	
	11-73	
	11-124	
	16-29	4
RN55D5112F	15-74	AR
RN55D5362F	15-74	AR
RN55D5622F	11-105	1
	15-74	AR
RN55D5902F	15-74	AR
RN55D6191F	11-39	1
RN55D6192F	15-74	AR
RN55D6492F	15-74	AR
RN55D6651F	11-149	1
RN55D6810F	16-34	1
RN55D6812F	15-74	AR
RN55D7150F	19-49	1
RN55D7151F	19-35	1
RN55D7152F	15-74	AR
RN55D7500F	7-121	
	19-45	2
RN55D7502F	15-74	AR
RN55D7870F	7-99	
	13-13	
	25-11	3
RN55D7872F	15-74	AR
RN55D8252F	15-74	AR
RN55D8662F	15-74	AR
RN55D9089F	11-36	1
RN55D9090F	11-40	1
RN55D9092F	15-74	AR
RN55D9311F	11-50	
	11-135	2
RN55D9532F	15-74	AR
RN55E1001B	11-53	1
RN55E1002B	7-85	
	11-87	
	11-147	
	11-153	4
RN55E1003B	11-107	
	11-152	2
RN55E1022B	8-148	1
RN55E1052B	11-89	1
RN55E1102B	11-12	1
RN55E1172B	11-11	1
RN55E1402B	7-102	
	11-12	2
RN55E1502B	7-110	1
RN55E1542B	7-78	1
RN55E1543B	7-90	1
RN55E1581B	11-158	1
RN55E1742B	7-116	1
RN55E1822B	22-67	1
RN55E1912B	11-9	1
RN55E2001B	11-88	1
RN55E2002B	11-20	1
RN55E2052B	11-90	1
RN55E2211B	11-158	1
RN55E2321B	11-87	
	11-158	2
RN55E2432B	7-92	1
RN55E2492B	22-64	1
RN55E2551B	11-89	1
RN55E2552B	7-98	
	11-9	2
RN55E3831B	7-70	1
RN55E4022B	11-8	1
RN55E4641B	7-71	1
RN55E4642B	11-8	1
RN55E4872B	7-125	1
RN55E5112B	7-29	1
RN55E5362B	7-126	1
RN55E5491B	7-49	1
RN55E5621B	11-90	1
RN55E5971B	11-10	1
RN55E6042B	7-124	1
RN55E6812B	7-82	
	7-86	2
RN55E7872B	7-80	1
RN55E9311B	11-88	1
RN60D8063F	7-114	
	7-115	2
RT22C2P102	19-56	1
RT22C2P501	15-34	
	19-55	2
RT22C2P502	22-15	1
RT24C2X102	7-72	
	7-73	2
RT24C2X103	7-79	
	7-89	
	11-2	
	11-3	
	11-4	
	11-5	
	11-6	
	11-92	
	11-93	
	11-94	10
RT24C2X502	7-75	
	7-77	
	7-81	
	7-84	

NUMERICAL INDEX

PART NUMBER	FIG-ITEM	TTL REQ
RT24C2X502	7-87	
	7-91	
	7-93	
	7-95	8
RWR81S1001FR	11-140A	1
RWR81S39R0FR	25-5	1
RW67VR13	19-1	
	19-3	
	19-5	3
RW67V1R0	19-2	
	19-4	
	19-6	
	19-7	
	19-8	
	19-9	
	19-10	
	19-11	
	19-12	9
RW67V6R8	19-23	1
RW69V1R0	19-26	1
RW69V151	10-2	1
RW69V221	10-12	1
RW70U1R33F	15-40	1
RW70U1R47F	15-31	1
RW70U1R96F	15-40	1
RW70U2210F	16-23	
	16-32	2
RW70U5620F	15-35	1
RW70U63R4F	16-23	1
R22NCFMA1-40	17-8	4
SA2518	18-5	
	18-7	2
SC9017T2-16-7-OH M	10-36	
	10-37	
	10-38	3
SC9017T2-50-OHM	10-60	
	10-75	2
SL354-351WHT	10-91	2
SL439-433WHT	18-25	10
SN54LS93J	15-97	
	15-98	
	15-154	3
SN54S74J	15-60	1
SN74LS138N	3-76	
	3-92	
	3-116	
	6-36	
	12-48	
	12-53	
	21-53	
	26-1	8
SN74LS139N	6-73	
	22-4	
	23-28	3
SN74LS164N	8-27	
	8-130	
	8-131	
	8-132	
	8-133	5
SN74LS174N	3-6	
	3-14	
	3-37	
SN74LS174N	3-43	
	3-69	
	3-73	
	3-74	
	3-75	
	3-78	
	3-80	
	3-81	
	3-82	
	3-84	
	3-85	
	3-86	
	3-88	
	3-89	
	3-91	
	3-93	
	3-96	
	3-97	
	3-99	
	3-100	
	8-50	
	8-58	
	8-62	
	8-89	
	8-90	
	8-92	
	8-93	
	8-121	
	8-122	
	8-126	
	8-137	
	12-2	
	12-4	
	12-8	
	12-15	
	21-3	
	21-7	
	21-12	
	21-18	
	21-20	
	22-68	
	22-70	45
SN74LS175N	8-4	
	8-7	
	8-17	
	8-46	
	8-51	
	8-60	
	8-61	
	8-72	
	8-96	
	8-161	10
SN74LS190N	15-16	
	15-67	
	15-70	3
SN74LS191N	6-6	
	15-15	
	15-61	3
SN74LS245N	26-39	1
SN74LS73AN	15-149	
	23-34	
	23-36	3
SN74LS74AN	3-33	

NUMERICAL INDEX

PART NUMBER	FIG-ITEM	TTL REQ
SN74LS74AN	6-5	
	6-63	
	8-9	
	8-26	
	8-28	
	8-118	
	8-173	
	12-6	
	12-11	
	12-14	
	12-52	
	15-138	
	15-143	
	22-74	
	22-81	
	26-15	17
SN74LS86N	8-23	
	8-44	
	8-47	
	8-77	
	8-124	
	8-135	
	8-136	
	8-140	
	8-176	
	23-40B	10
SN74LS90N	12-34	
	12-36	
	12-38	
	12-41	
	12-44	
	12-45	
	12-54	
	12-55	
	12-62	
	12-63	
	15-158	11
SN74S00N	12-25	1
SN7406N	3-79	
	3-94	
	3-106	
	3-110	
	3-114	
	3-119	
	3-124	
	3-128	
	3-130	
	3-131	
	3-133	
	3-135	
	8-160	
	12-16	
	12-56	
	21-2	
	21-6	
	21-11	
	21-17	
	21-21	
	23-9	21
SN74170N	8-71	
	8-76	
	8-129	
	8-177	4
SN7483AN	8-3	
	8-6	
	8-52	
	8-70	
	8-74	
	8-78	
	8-86	
	8-95	
	8-125	
	8-180	10
SN75450BN	23-14	1
SRA1W	10-64	1
SRF2263XRF525	10-5	
	10-19	
	16-22	3
TA2402A	15-37	
	15-41	
	19-24	3
TSW3800-14BW	4-40	
	15-163	
	23-40C	26
TSW3800-16BW	8-167	
	15-164	19
TSW3800-22BW	22-8	
	22-10	
	22-12	
	22-50	
	22-55	
	22-72	6
TSW3800-24BW	6-1B	
	6-8	
	6-9	
	6-10	
	6-11	
	6-12	
	6-13	
	6-38	
	6-39	
	6-40	
	6-41	
	6-42	
	6-44	
	6-50	
	8-152	15
TW-516-25-050	18-1	
	18-3	2
TW516-10	18-2	
	18-12	2
TX0522B	16-21B	1
ULN2003A	3-38	
	3-56	
	3-63	
	3-67	4
VK20020-4B	10-7	
	10-24	
	10-61	
	10-71	
	17-20	
	17-23	
	25-1	
	25-24	8
Z80	6-16	1
009-1766-020	17-33	1

NUMERICAL INDEX

PART NUMBER	FIG-ITEM	TTL REQ
009-1766-050	17-34	1
01-0003-00	2-59	1
01-70-0305	26-12	1
012-2785-000	17-38	
	24-29	6
012-2786-000	5-9	
	24-32	6
012-3160-000	17-38	
	24-29	6
028021	17-33	1
1-552298-1	24-26	2
1CC0X381X5100C4	7-120	1
1N1192	18-1	
	18-3	2
1N1202A	18-2	
	18-12	2
1N3024B	22-24	1
1N3026B	22-25	1
1N4007	14-3	1
1N4454GE	6-69	
	16-28	
	21-45	
	22-78	
	23-7	
	25-12	
	26-35	7
1N4736A	11-41	1
1N5767	10-42	
	10-44	
	10-46	
	10-48	
	10-50	
	10-52	
	10-54	
	10-56	8
1N645	11-125	
	11-126	
	11-138	
	22-17	
	22-38	
	22-39	
	22-45	
	22-47	
	22-48	
	22-51	10
1N752A	7-19	
	7-44	2
1N753A	11-41	
	20-4	
	20-5	3
1N754A	15-38	1
1N758A	22-35	1
1N825A	7-119	1
1N963B	22-20	1
101KMSX500	10-40	
	10-62	2
1017-12-1	21-4	
	21-8	
	21-10	
	21-14	
	21-15	
	21-16	
	21-23	
1017-12-1	21-24	
	21-25	
	21-26	
	21-27	
	21-28	
	21-29	
	21-30	
	21-31	
	21-32	
	21-33	
	21-35	
	21-36	
	21-37	
	21-38	
	21-40	
	21-47	
	21-48	
	21-49	
	21-50	
	21-52	27
105-1101-001	11-59	
	11-60	
	11-95	
	11-96	
	11-97	
	12-64	
	12-65	
	12-66	
	12-67	
	12-68	
	12-69	
	12-70	
	12-71	
	22-14	14
105-1103-001	22-13	1
11C90DC	12-24	
	12-24	
	15-23	
	15-23	4
115058-05	17-10	1
115058-10	17-14	
	17-15	2
12914A	13-32	1
139-0137-000	17-10	1
139-0138-000	17-14	
	17-15	2
1495D	20-8	1
150-0792-090	11-139	1
1558H	11-131	1
1560TL	2-60	4
1625-6P1	2-61	1
1625-6R	18-8	1
1625-9R	24-5	1
183-1277-020	22-43	1
183-1277-350	22-46	1
183-1277-460	22-42	1
183-1464-280	17-14	
	17-15	2
183-1467-120	17-10	1
184-5102-070	18-11	1
184-5102-730	18-10	1
184-9086-140	15-32	
	23-4	

NUMERICAL INDEX

PART NUMBER	FIG-ITEM	TTL REQ
184-9086-140	23-27	
	26-32	4
184-9086-170	3-142	1
184-9086-210	8-112	
	8-113	2
184-9086-250	19-37	
	19-38	2
184-9086-340	15-123	
	22-41	2
184-9086-460	7-4	
	7-57	
	7-129	
	7-132	
	21-41	
	21-42	
	21-43	
	22-59	
	22-79	
	23-4	
	23-27	
	26-38	12
184-9086-490	6-29	
	6-65	
	7-45	
	7-48	
	8-105	
	8-106	
	15-26	7
184-9086-550	19-43	1
184-9086-640	15-28	
	15-107	
	19-13	3
184-9086-660	15-47	
	15-48	2
184-9086-720	13-9	
	13-10	
	15-54	
	15-124	4
184-9087-430	19-16	1
1855TL	24-6	9
1999	10-86	1
2-552474-1	24-25	1
2A1DB15	17-22	2
2CC0G681X5100C4	7-97	1
2N2222A	11-45	
	11-47	
	11-136	
	11-137	
	12-58	
	15-42	
	15-43	
	15-55	
	19-30	9
2N2369A	15-91	
	15-93	
	15-103	3
2N2905A	22-21	
	22-30	2
2N2907A	15-33	
	15-44	
	16-9	
	22-32	
	22-34	
2N2907A	25-7	6
2N3767	19-24	1
2N3879	15-37	1
	15-41	
2N4416	7-10	1
2N5109	16-38	1
2N918	8-84	
	15-22	
	15-83	
	15-116	
	15-119	5
2R2CMSX500	10-62A	AR
200-2069-000	24-19	4
200JMSX500	10-13	
	10-18	2
2001-7941	24-12	1
201-0020-000	18-18	2
201-1080-000	17-12	2
204CB	10-4	
	10-17	2
2115	18-2	
	18-12	3
220-0044-010	6-17	1
220-0075-020	4-40	
	15-163	
	23-40C	26
220-0075-030	8-167	
	15-164	19
220-0075-050	6-1B	
	6-8	
	6-9	
	6-10	
	6-11	
	6-12	
	6-13	
	6-38	
	6-39	
	6-40	
	6-41	
	6-42	
	6-44	
	6-50	
	8-152	15
220-0075-060	22-8	
	22-10	
	22-12	
	22-50	
	22-55	
	22-72	6
240-1562-000	8-114	
	8-115	2
240-1580-000	8-109	
	8-111	2
240-2013-000	15-121	1
240-2023-000	13-19	1
240-2030-000	15-112	1
240-2031-000	16-20	1
240-2679-040	10-7	
	10-24	
	10-61	
	10-71	
	17-20	
	17-23	

NUMERICAL INDEX

PART NUMBER	FIG-ITEM	TTL REQ
240-2679-040	25-1	
	25-24	8
240-2715-030	25-30	1
240-2715-250	7-43	
	7-47	2
240-2715-320	11-98	1
240-2715-370	7-5	
	7-55	
	7-65	
	7-69	
	7-130	
	7-140	
	7-147	
	7-148	
	8-157	
	8-169	
	13-5	11
240-2715-380	7-23	1
240-2715-460	7-30	1
240-2715-480	7-32	1
241-5002-010	13-23	
	13-24	
	13-25	
	13-26	4
241-5006-010	10-80	
	10-82	
	14-4	
	14-5	
	14-6	
	14-7	
	14-8	
	14-9	
	14-10	
	14-11	
	14-12	
	14-13	
	14-14	
	14-15	
	14-16	
	14-17	
	14-18	
	14-19	
	14-20	
	14-21	
	14-22	
	14-23	
	14-24	23
262-1463-010	4-41	
	4-42	
	4-43	
	4-44	
	4-45	
	4-53	
	4-54	
	4-56	
	4-57	
	4-59	
	4-60	
	4-66	
	4-67	
	4-68	14
262-2730-000	3-1	
	3-2	
262-2730-000	3-3	
	3-4	
	3-5	
	3-9	
	3-12	
	3-13	
	3-27	
	3-31	
	3-50	
	3-57	
	3-58	
	3-64	
	3-65	
	3-66	
	3-68	17
264-0449-000	17-17	1
264-0964-040	18-19	
	18-20	2
264-4160-000	18-9	1
265-1114-000	18-22	1
265-1171-000	17-18	1
266-0243-020	23-5	
	26-12	2
266-7508-090	2-57	1
266-7508-120	2-59	1
266-7508-260	2-46	
	2-49	2
266-7524-010	2-58	1
266-7532-010	3-8	
	3-10	
	3-11	
	3-15	
	3-16	
	3-17	
	3-18	
	3-19	
	3-20	
	3-21	
	3-22	
	3-28	
	3-29	
	3-30	
	3-39	
	3-40	
	3-41	
	3-42	
	3-48	
	3-49	
	3-51	
	3-52	
	3-53	
	3-54	
	3-55	
	3-59	
	3-60	
	3-61	
	3-62	29
266-7532-020	3-1	
	3-2	
	3-3	
	3-4	
	3-5	
	3-9	

NUMERICAL INDEX

PART NUMBER	FIG-ITEM	TTL REQ
266-7532-020	3-12	
	3-13	
	3-27	
	3-31	
	3-50	
	3-57	
	3-58	
	3-64	
	3-65	
	3-66	
	3-68	17
277-0332-010	10-64	
	10-64	2
277-0442-020	13-4	1
277-0479-010	10-58	1
277-0583-010	10-64	1
280-1368-060	17-2	
	17-31	
	18-14	3
280-1368-070	17-3	
	17-27A	2
280-2745-010	3-12A	
	3-15A	
	5-4A	
	6-21A	
	7-38A	
	8-39A	
	11-122A	
	12-18A	
	15-85A	
	21-31A	
	22-44A	
	23-22A	12
280-2745-020	9-7A	
	13-26A	2
289-7062-010	6-49	
	8-79	
	26-31	3
289-7261-020	15-82	1
302-0007-000	19-15	1
302-0640-170	18-2	
	18-12	4
302-0640-270	18-1	
	18-3	4
304-0015-000	13-14	
	13-14	
	14-1	
	14-26	
	15-37	
	15-41	
	17-22	
	17-26	
	20-8	14
304-0016-000	19-24	
	19-25	
	20-6	
	20-7	4
304-0087-000	17-11	
	17-13	4
304-0997-030	18-1	
	18-3	4
304-1089-000	17-29	1
304-1466-010	18-2	
304-1466-010	18-12	3
305-1361-000	5-9	
	9-9	
	24-32	16
305-1823-000	18-22	1
306-0234-000	17-22	2
306-0323-000	13-31	1
306-0983-000	13-32	1
306-1102-000	20-8	1
306-1286-000	10-81	
	10-83	
	10-84	3
306-1521-000	18-25	10
306-2474-010	10-91	2
306-2537-040	18-17	2
307-1217-000	14-28	2
310-0045-000	9-2	
	9-5	
	11-129	8
310-0046-000	17-35	
	18-16	
	24-15	
	24-19	14
310-0048-000	1-7	
	17-4	
	24-10	9
310-0049-000	18-2	
	18-12	2
310-0050-000	18-1	
	18-3	2
310-0053-000	13-14	
	13-18	4
310-0070-000	14-1	2
310-0072-000	1-7	
	17-4	10
310-0075-000	13-14	
	13-16	
	13-18	12
310-0102-000	18-1	
	18-3	2
310-0148-000	13-22	1
310-0275-000	2-57	
	2-58	
	10-81	
	10-83	
	10-84	11
310-0278-000	11-129	
	13-1	
	13-4	
	13-27	
	14-26	
	18-17	25
310-0279-000	2-25	
	2-62	
	2-63	
	5-1	
	5-2	
	5-6	
	9-2	
	9-4	
	9-5	
	10-1	
	12-73	

NUMERICAL INDEX

PART NUMBER	FIG-ITEM	TTL REQ
310-0279-000	12-74	
	15-37	
	15-41	
	17-22	
	17-26	
	19-15	
	19-18	
	19-21	
	20-1	
	20-2	
	20-8	
	24-15	
	24-15	78
310-0282-000	17-29	
	18-13	
	18-16	
	19-24	
	19-25	
	19-33	
	20-6	
	20-7	
	24-15	
	24-19	29
310-0283-000	24-10	2
310-0284-000	1-12	
	18-2	
	18-12	6
310-0468-040	13-22	1
310-0740-080	25-31	2
310-0740-240	12-73	
	12-74	6
310-0778-010	10-86	1
310-0779-030	5-1	
	5-2	
	5-6	
	24-15	9
310-6320-000	14-1	2
310-6340-000	13-27	
	14-26	
	15-37	
	15-41	
	17-26	
	19-15	
	19-18	
	19-21	
	24-15	22
310-6360-000	19-24	
	19-25	
	19-33	
	20-6	
	20-7	11
311-0355-000	21-1	
	22-1	
	23-15	
	26-14	8
3110CC453V025	17-14	
	17-15	2
313-0003-000	18-1	
	18-3	2
313-0017-000	17-4	3
313-0019-000	18-2	
	18-12	2
313-0043-000	17-26	
313-0043-000	19-15	
	19-18	
	19-21	7
313-0045-000	17-29	
	18-13	
	19-24	
	19-25	
	19-33	
	20-6	
	20-7	
	24-15	
	24-19	19
313-0050-000	10-81	
	10-83	
	10-84	
	13-14	
	13-18	
	14-1	10
313-0132-000	2-25	
	2-56	
	3-144	
	15-37	
	15-41	
	18-17	
	24-15	20
314A152	8-2	
	8-10	
	8-35	
	8-64	
	8-75	
	8-93	
	8-178	
	22-3	
	22-6	9
314B151	4-1	
	4-3	
	4-7	
	4-8	
	4-21	
	4-22	
	4-27	
	4-31	
	4-33	
	4-39	
	4-46	
	4-50	
	4-51	
	4-52	
	4-55	
	4-58	
	4-61	
	4-65	
	4-72	19
316A472	8-56	1
330-1716-030	2-55	
	2-56	
	5-3	17
330-2290-000	2-25	2
330-4058-030	1-18	4
333-0248-000	9-9	2
333-0347-000	5-6	
	24-11	
	24-18	

NUMERICAL INDEX

PART NUMBER	FIG-ITEM	TTL REQ
333-0347-000	24-21	12
333-0368-000	17-15	2
333-0381-000	17-10	
	17-14	4
333-0838-000	24-31	2
333-0839-000	17-8	4
333-0842-000	1-14	
	1-19	
	17-37	
	18-26	
	24-8	
	24-30	54
334-1492-000	17-34	4
334-2697-000	13-30	2
342-0043-000	24-20	2
342-0044-000	17-7	4
342-0046-000	24-11	
	24-18	
	24-21	10
342-0061-000	1-5	
	1-18	
	2-54	
	17-1	
	17-5	18
342-0063-000	17-15	2
342-0145-000	13-27	2
343-0123-000	1-1	
	2-57	
	2-58	
	13-16	18
343-0124-000	25-31	2
343-0125-000	14-1	2
343-0131-000	16-21C	1
343-0132-000	10-1	
	11-129	
	13-1	
	13-27	
	17-22	
	24-15	34
343-0133-000	2-62	
	5-1	
	5-2	
	9-2	
	9-4	
	12-74	
	13-4	
	13-27	
	20-1	
	24-15	38
343-0134-000	2-63	
	13-27	
	14-26	8
343-0135-000	9-2	
	9-5	
	19-18	
	19-21	
	20-2	10
343-0136-000	15-37	
	15-41	
	19-15	5
343-0137-000	17-26	
	24-1	6
343-0138-000	5-6	2
343-0139-000	24-15	1
343-0142-000	9-3	4
343-0167-000	18-15	2
343-0168-000	1-5	
	1-13	
	17-1	
	17-5	
	17-29	
	17-35	
	18-13	
	24-4	
	24-7	
	24-20	29
343-0169-000	1-2A	
	1-6	
	1-13	
	17-16	
	17-19	
	17-35	
	19-33	
	24-20	20
343-0170-000	19-24	
	24-19	6
343-0171-000	18-16	
	19-25	4
343-0173-000	20-6	
	20-7	4
343-0174-000	24-15	4
343-0182-000	17-34	2
343-0183-000	17-34	2
343-0185-000	24-10	2
343-0187-000	17-4	3
343-0188-000	17-4	
	17-10	
	17-14	7
343-0197-000	1-7	4
343-0224-000	17-11	2
343-0226-000	17-13	
	17-15	4
343-0228-000	1-12	4
343-0299-000	13-14	
	13-18	4
343-0304-000	13-18	3
347-1068-000	17-21	2
350-267	18-22	1
350-4027-010	4-1	
	4-3	
	4-7	
	4-8	
	4-21	
	4-22	
	4-27	
	4-31	
	4-33	
	4-39	
	4-46	
	4-50	
	4-51	
	4-52	
	4-55	
	4-58	
	4-61	
	4-65	

NUMERICAL INDEX

PART NUMBER	FIG-ITEM	TTL REQ
350-4027-010	4-72	19
350-4027-130	8-2	
	8-10	
	8-35	
	8-64	
	8-75	
	8-98	
	8-178	
	22-3	
	22-6	9
350-4030-020	8-56	1
3502-14-46S	13-22	1
351-0196-010	3-38	
	3-56	
	3-63	
	3-67	4
351-1035-010	15-125	
	19-32	
	19-47	3
351-1040-020	7-17	
	7-25	
	7-34	
	7-40	
	7-74	
	7-105	
	7-108	
	8-159	
	11-112	
	11-151	
	11-162	11
351-1071-020	11-131	1
351-1079-020	7-59	
	7-66	
	7-134	
	7-141	4
351-1095-030	11-23	
	11-68	
	11-75	
	11-84	4
351-1112-030	22-31	1
351-1120-050	19-21	1
351-1120-070	19-18	1
351-1124-160	19-15	1
351-1152-010	8-150	1
351-1153-010	7-12	
	7-52	2
351-1153-020	11-15	
	11-52	
	11-61	
	11-142	4
351-1153-030	11-142	1
351-1159-050	8-166	1
351-1237-010	11-67	1
351-1267-020	3-32	
	3-35	
	3-36	
	3-101	
	6-14	
	6-15	
	6-27	
	6-28	
	6-33	
	6-35	

PART NUMBER	FIG-ITEM	TTL REQ
351-1267-020	6-58	
	6-71	
	6-72	
	6-82	
	12-33	
	12-35	
	12-37	
	12-40	
	12-43	
	22-58	
	22-60	
	22-61	
	23-3	
	23-29	
	23-32	25
351-1281-010	11-35	
	11-123	
	11-142	
	11-155	4
351-1298-010	8-151	1
351-1338-010	23-19	
	23-20	
	23-22	
	23-25	4
351-1393-010	26-20	
	26-21	
	26-26	
	26-29	4
351-1503-010	15-66	1
351-1523-090	6-62	
	22-69	
	23-37	
	26-33	4
351-1523-110	3-71	
	6-32	
	8-14	
	8-22	
	8-31	
	8-32	
	8-174	
	12-49	
	15-96	
	15-151	
	15-156	
	22-80	
	23-31	13
351-1523-120	15-111	
	26-4	2
351-1523-130	22-5	1
351-1523-220	3-115	
	8-19	
	8-21	
	8-33	
	8-57	
	8-117	
	12-46	
	15-108	8
351-1523-230	3-143	1
351-1523-260	3-103	
	6-31A	
	6-60	
	6-70	
	21-51	

NUMERICAL INDEX

PART NUMBER	FIG-ITEM	TTL REQ
351-1523-260	26-17	6
351-1525-040	3-33	
	6-5	
	6-63	
	8-9	
	8-26	
	8-28	
	8-118	
	8-173	
	12-6	
	12-11	
	12-14	
	12-52	
	15-138	
	15-143	
	22-74	
	22-81	
	26-15	17
351-1525-060	15-149	
	23-34	
	23-36	3
351-1526-030	3-76	
	3-92	
	3-116	
	6-36	
	12-48	
	12-53	
	21-53	
	26-1	8
351-1526-040	6-73	
	22-4	
	23-28	3
351-1527-030	6-6	
	15-15	
	15-61	3
351-1527-040	15-16	
	15-67	
	15-70	3
351-1529-040	3-6	
	3-14	
	3-37	
	3-43	
	3-69	
	3-73	
	3-74	
	3-75	
	3-78	
	3-80	
	3-81	
	3-82	
	3-84	
	3-85	
	3-86	
	3-88	
	3-89	
	3-91	
	3-93	
	3-96	
	3-97	
	3-99	
	3-100	
	8-50	
	8-58	

PART NUMBER	FIG-ITEM	TTL REQ
351-1529-040	8-62	
	8-89	
	8-90	
	8-92	
	8-93	
	8-121	
	8-122	
	8-126	
	8-137	
	12-2	
	12-4	
	12-8	
	12-15	
	21-3	
	21-7	
	21-12	
	21-18	
	21-20	
	22-68	
	22-70	45
351-1529-050	8-4	
	8-7	
	8-17	
	8-46	
	8-51	
	8-60	
	8-61	
	8-72	
	8-96	
	8-161	10
351-1529-060	8-27	
	8-130	
	8-131	
	8-132	
	8-133	5
351-1636-010	12-34	
	12-36	
	12-38	
	12-41	
	12-44	
	12-45	
	12-54	
	12-55	
	12-62	
	12-63	
	15-158	11
351-1653-020	12-24	
	15-23	2
351-1653-040	12-24	
	15-23	2
351-1656-010	15-60	1
351-1698-010	8-23	
	8-44	
	8-47	
	8-77	
	8-124	
	8-135	
	8-136	
	8-140	
	8-176	
	23-40B	10
351-1738-010	15-97	
	15-98	

NUMERICAL INDEX

PART NUMBER	FIG-ITEM	TTL REQ
351-1738-010	15-154	3
351-1795-020	26-6	1
351-1849-020	26-39	1
351-7544-020	3-107	
	3-111	
	3-112	
	3-117	
	3-120	
	3-122	
	3-125	
	3-126	
	3-129	
	3-132	
	3-134	
	3-136	
	3-137	
	3-140	14
351-7616-020	22-76	1
351-7619-040	23-8	1
351-7626-010	23-14	1
351-7630-010	6-7	
	8-15	
	8-85	
	8-123	4
351-7632-010	3-79	
	3-94	
	3-106	
	3-110	
	3-114	
	3-119	
	3-124	
	3-128	
	3-130	
	3-131	
	3-133	
	3-135	
	8-160	
	12-16	
	12-56	
	21-2	
	21-6	
	21-11	
	21-17	
	21-21	
	23-9	21
351-7676-020	8-1	
	8-5	
	8-8	
	8-11	
	8-16	
	8-34	
	8-63	
	8-68	
	8-99	
	8-119	10
351-7681-010	8-18	
	8-53	2
351-7703-010	8-100	1
351-7715-020	12-72	1
351-7724-010	8-91	
	8-94	2
351-7725-010	8-69	1
351-7728-010	8-65	
351-7728-010	8-67	2
351-7750-010	8-55	1
351-7752-010	8-3	
	8-6	
	8-52	
	8-70	
	8-74	
	8-78	
	8-86	
	8-95	
	8-125	
	8-180	10
351-7761-020	26-22	1
351-7770-010	12-25	1
351-7800-010	8-43	
	8-54	
	8-179	3
351-7813-020	12-28	
	12-29	2
351-7817-010	8-71	
	8-76	
	8-129	
	8-177	4
351-8159-210	6-45	
	7-6	
	7-54	
	7-127	
	7-128	5
351-8159-240	6-2	1
351-8227-020	11-1	
	11-171	2
351-8236-020	7-88	
	7-96	2
351-8410-020	6-51	
	6-54	
	6-55	
	6-56	
	6-57	
	6-83	
	6-85	
	6-86	8
351-8439-030	23-16	
	23-18	2
351-8453-010	6-16	1
351-8530-010	22-7	
	22-9	
	22-11	
	22-49	
	22-54	
	22-71	6
351-8530-020	22-7	
	22-9	
	22-11	
	22-49	
	22-54	
	22-71	6
351-8679-010	26-44	1
351-9054-010	10-36	
	10-37	
	10-38	3
351-9054-020	10-60	
	10-75	2
352-0440-000	8-84	

NUMERICAL INDEX

PART NUMBER	FIG-ITEM	TTL REQ
352-0440-000	15-22	
	15-83	
	15-116	
	15-119	5
352-0550-000	22-21	
	22-30	2
352-0551-010	15-33	
	15-44	
	16-9	
	22-32	
	22-34	
	25-7	6
352-0596-030	15-91	
	15-93	
	15-103	3
352-0661-020	11-45	
	11-47	
	11-136	
	11-137	
	12-58	
	15-42	
	15-43	
	15-55	
	19-30	9
352-0689-020	19-24	1
352-0704-020	15-37	1
	15-41	
352-0756-010	7-10	1
352-0766-010	16-38	1
352-1005-010	20-6	
	20-7	2
352-1109-010	10-5	
	10-19	
	16-22	3
352-1185-010	25-19	
	25-53	2
352-9552-200	16-22A	1
352-9552-580	15-119A	4
352-9555-050	16-21B	1
352-9561-010	18-2	
	18-12	2
352-9561-020	18-1	
	18-3	2
352-9570-020	15-37	
	15-41	
	19-24	3
352-9571-060	10-4	
	10-17	2
352-9605-100	19-15	1
352-9882-010	19-25	
	20-6	
	20-7	3
353-0311-010	4-2	
	4-4	
	4-9	
	4-10	
	4-12	
	4-15	
	4-18	
	4-20	
	4-24	
	4-26	
	4-30	
353-0311-010	4-32	
	4-34	
	4-36	
	4-37	
	4-38	
	4-47	
	4-48	
	4-49	
	4-62	
	4-63	
	4-64	
	4-69	
	4-70	
	4-71	25
353-0405-020	18-5	
	18-7	2
353-1572-000	18-1	
	18-3	2
353-1889-000	18-2	
	18-12	2
353-2607-000	11-125	
	11-126	
	11-138	
	22-17	
	22-38	
	22-39	
	22-45	
	22-47	
	22-48	
	22-51	10
353-2712-000	7-19	
	7-44	2
353-2714-000	11-41	
	20-4	
	20-5	3
353-2716-000	15-38	1
353-2724-000	22-35	1
353-3085-000	15-9	1
353-3129-000	22-24	1
353-3131-000	22-25	1
353-3174-000	22-20	1
353-3262-000	7-119	1
353-3644-010	6-69	
	16-28	
	21-45	
	22-78	
	23-7	
	25-12	
	26-35	7
353-6442-070	14-3	1
353-6481-170	11-41	1
353-6532-100	22-35	1
353-6545-020	19-25	1
357-0035-010	12-78	1
357-0093-010	1-2A	1
357-7193-010	10-78	
	10-79	2
357-7195-020	12-75	1
357-7195-030	10-85	1
357-7207-010	11-130	1
357-7207-220	13-21	
	25-46	2
357-7207-290	1-10	1

NUMERICAL INDEX

PART NUMBER	FIG-ITEM	TTL REQ
357-7322-010	14-25	1
357-7395-010	24-12	1
357-7530-030	24-13	1
357-7541-010	1-11	1
360-0159-000	19-53	
	19-54	2
360-0484-010	11-59	
	11-60	
	11-95	
	11-96	
	11-97	
	12-64	
	12-65	
	12-66	
	12-67	
	12-68	
	12-69	
	12-70	
	12-71	
	22-14	14
360-0484-030	22-13	1
367-0002-000	18-16	1
368-0385-010	17-26	1
370-2298-000	12-73	2
371-0183-000	11-115	1
371-0385-100	12-73	1
371-0393-010	11-129	1
371-0931-000	14-1	1
371-2470-000	14-2	2
372-0018-130	24-26	2
372-0018-710	24-25	1
372-0018-720	24-24	1
372-2234-010	8-38	
	8-41	
	8-182	
	21-58	
	22-84	
	23-43	
	26-24	299
372-2234-020	8-39	
	8-42	
	8-183	
	21-57	
	22-83	
	23-42	
	26-23	295
372-2235-012	18-24	6
372-2252-010	4-5	
	4-28	158
372-2255-020	10-89	7
372-2601-027	15-165	
	25-55	26
372-2601-033	12-76	1
372-2601-037	22-86	3
372-2601-043	24-16	331
372-2601-045	3-145	
	6-53	
	7-151	
	11-101	
	19-57	326
372-2601-047	24-16	326
372-2601-063	15-166	2
372-2601-086	8-110	90
372-2601-131	24-17	64
372-2601-143	12-80	40
372-2601-167	24-17	64
372-2602-025	18-23	17
372-2622-074	21-59	
	22-85	
	23-44	
	26-25	4
372-2623-016	8-181	1
372-2623-025	8-37	
	8-40	2
372-2624-018	19-51	1
372-2624-025	7-149	1
372-2624-038	6-24	1
372-2624-047	4-6	1
372-2624-052	4-29	1
372-2648-050	24-27	1
372-2648-070	24-23	1
372-3392-011	7-150	
	19-52	49
372-3392-016	6-23	57
372-5909-030	2-60	4
372-5909-090	24-6	9
372-5909-230	2-61	1
372-5909-240	18-8	1
372-5909-290	24-5	1
373-0043-000	17-11	
	17-13	
	17-15	6
373-3030-000	25-19	
	25-53	2
378-0629-010	24-10	1
381-1721-030	15-34	
	19-55	2
381-1721-040	19-56	1
381-1721-060	22-15	1
381-1853-270	7-72	
	7-73	2
381-1853-290	7-75	
	7-77	
	7-81	
	7-84	
	7-87	
	7-91	
	7-93	
	7-95	8
381-1853-300	7-79	
	7-89	
	11-2	
	11-3	
	11-4	
	11-5	
	11-6	
	11-92	
	11-93	
	11-94	10
382-0052-290	11-2	1
4-140	18-16	1
4R3CMSX500	10-62A	AR
4007-4HT	13-14	
	13-14	
	14-1	
	14-26	

NUMERICAL INDEX

PART NUMBER	FIG-ITEM	TTL REQ
4007-4HT	15-37	
	15-41	
	17-22	
	17-26	
	20-6	14
4007-6HT	19-24	
	19-25	
	20-6	
	20-7	4
4021	17-11	
	17-13	4
403	17-29	1
4040BPC	6-2	1
410-0558-030	21-4	
	21-8	
	21-10	
	21-14	
	21-15	
	21-16	
	21-23	
	21-24	
	21-25	
	21-26	
	21-27	
	21-28	
	21-29	
	21-30	
	21-31	
	21-32	
	21-33	
	21-35	
	21-36	
	21-37	
	21-38	
	21-40	
	21-47	
	21-48	
	21-49	
	21-50	
	21-52	27
425-1538-000	25-47	1
42525	17-4	1
426-0084-010	24-22	1
426-0091-010	24-24	1
43-77-2	19-15	1
435-0002-090	18-11	2
471KMSX200	10-3	
	10-8	
	10-16	
	10-20	
	10-26	
	10-29	
	10-30	
	10-31	
	10-32	
	10-33	
	10-34	
	10-35	
	10-39	
	10-57	
	10-62	
	10-68	
	10-70	

PART NUMBER	FIG-ITEM	TTL REQ
471KMSX200	10-72	
	10-86	
	12-22	
	12-23	
	12-26	
	12-27	
	16-3	
	16-10	
	16-13	
	16-17	
	16-35	
	16-36	
	25-2	
	25-16	
	25-18	
	25-25	
	25-29	
	25-34	
	25-42	
	25-43	
	25-52	38
476042	17-34	1
5R2-1	5-9	
	24-32	6
5S3-1	17-33	
	24-29	6
5S5-8	17-38	
	24-29	6
504-7698-002	10-92	14
504-9478-002	13-33	
	14-27	4
50459-932459	23-8	1
5082-4670	4-2	
	4-4	
	4-9	
	4-10	
	4-12	
	4-15	
	4-18	
	4-20	
	4-24	
	4-26	
	4-30	
	4-32	
	4-34	
	4-36	
	4-37	
	4-38	
	4-47	
	4-48	
	4-49	
	4-62	
	4-63	
	4-64	
	4-69	
	4-70	
	4-71	25
5082-7650	4-41	
	4-42	
	4-43	
	4-44	
	4-45	
	4-53	

NUMERICAL INDEX

PART NUMBER	FIG-ITEM	TTL REQ
5082-7650	4-54	
	4-56	
	4-57	
	4-59	
	4-60	
	4-66	
	4-67	
	4-68	14
51-311-3850	10-78	1
518-024A2-5-9PF	10-13	
	10-77	
	25-13	
	25-23	
	25-36	5
518-024A3-5-20PF	16-4	
	16-39	2
518-024A5-25PF	16-24	
	25-22	2
52-045-0000	10-78	
	10-79	2
52-052-0000	10-85	1
52-053-0000	10-75	1
52-307-3188	11-130	1
52-309-9702	1-10	1
52-312-9040	13-21	
	25-46	2
5202	10-77	1
538011C0P092R	8-81	1
540-3003-003	13-22	1
540-7764-002	9-12	2
540-9002-003	2-57	
	2-58	4
540-9031-003	5-6	2
540-9033-003	5-4	6
540-9037-003	12-74	2
540-9160-003	24-15	1
540-9172-003	20-2	2
540-9201-003	18-16	
	24-15	
	24-15	11
540-9205-003	24-19	2
547-5305-002	18-13	1
547-8177-014	19-24	
	19-25	
	20-6	
	20-7	8
547-8177-015	15-37	
	15-41	4
552633-2	24-24	1
563-2844-002	13-29	2
6S	17-34	4
600D107F075DL5	22-42	1
600D107G050DJ5	22-46	1
600D226G050KD5	22-43	1
601-2099-001	6-1C	1
601-2309-001	1-3	1
	26-	REF
601-4883-001	5-3	1
	8-	REF
601-4911-001	5-1	1
	7-	REF
601-4913-002	2-55	1
	4-	REF
601-4914-001	2-56	1
	3-	REF
601-4915-002	9-4	1
	11-	REF
601-5001-001	9-5	1
	10-	REF
601-5221-001	17-35	1
	19-	REF
601-5261-001	9-3	1
	12-	REF
601-5813-001	21-56	1
601-5881-001	1-4	1
	21-	REF
601-5882-001	1-17	1
	22-	REF
601-5883-001	1-3	1
	23-	REF
601-5938-001	24-15	1
602D528A1	17-10	1
609-3929-001	1-2	1
609-9790-001	21-1	
	22-1	
	23-15	
	26-14	16
617-8088-001	21-1	
	23-15	
	26-14	6
618-7342-007	15-131	1
618-8088-001	22-1	2
621-9814-001	21-34	
	22-52	
	23-24	3
622-4127-001	1-	REF
622-4127-002	1-	REF
622-4127-003	1-	REF
622-4127-004	1-	REF
623-0740-002	16-15	1
623-0741-001	16-7	1
623-1379-001	13-22	1
623-4546-001	15-41	1
623-9022-002	2-24	1
629-0221-001	11-128	2
629-9613-001	2-63	1
629-9675-002	2-22	1
629-9691-003	18-15	1
629-9730-002	1-12	1
	2-	REF
629-9731-004	2-27	2
629-9733-004	2-54	2
629-9734-001	2-21	2
629-9736-001	9-6	1
629-9737-001	2-62	1
629-9738-001	1-13	1
629-9738-002	1-15	1
629-9738-003	1-13	1
629-9738-004	1-15	1
629-9739-001	24-7	1
629-9739-002	24-9	1
629-9740-002	1-16	1
	5-	REF
629-9742-002	2-26	1
629-9745-001	2-16	1
629-9745-002	2-18	1

NUMERICAL INDEX

PART NUMBER	FIG-ITEM	TTL REQ
629-9745-003	2-20	1
629-9745-004	2-15	1
629-9745-005	2-17	1
629-9745-006	2-19	1
629-9745-007	2-30	1
629-9745-008	2-29	1
629-9745-009	2-28	1
629-9745-010	2-6	1
629-9745-011	2-3	1
629-9745-012	2-5	1
629-9745-013	2-7	1
629-9745-014	2-2	1
629-9745-015	2-4	1
629-9745-017	2-43	1
629-9745-018	2-40	
	2-41	2
629-9745-019	2-39	1
629-9745-020	2-42	1
629-9745-021	2-38	1
629-9745-022	2-44	1
629-9745-023	2-45	1
629-9745-024	2-47	1
629-9745-025	2-51	1
629-9745-026	2-50	1
629-9745-028	2-1	1
629-9745-029	2-53	1
629-9745-030	2-52	1
629-9745-032	2-48	1
629-9745-033	2-33	1
629-9747-001	1-18	1
629-9747-002	1-20	1
629-9749-001	5-8	1
629-9749-002	5-10	1
629-9750-002	1-6	1
	9-	REF
629-9751-001	9-8	1
629-9751-002	9-13	1
629-9752-001	9-1	1
629-9753-001	10-90	1
629-9753-002	10-93	1
629-9754-001	10-1	1
629-9755-001	12-79	1
629-9756-001	12-19	1
629-9758-001	11-127	1
629-9758-002	11-114	1
629-9758-003	12-77	1
629-9759-001	9-7	2
629-9760-001	1-7	1
	13-	REF
629-9764-001	9-10	4
629-9765-001	10-87	1
629-9766-001	9-2	1
629-9768-001	2-14	1
629-9768-002	2-31	1
629-9770-002	1-5	1
	17-	REF
629-9772-001	20-9	1
629-9773-001	20-1	1
629-9776-004	10-88	1
629-9778-001	17-7	1
629-9778-002	17-9	1
629-9779-001	17-6	1
629-9780-002	1-8	1
629-9780-002	24-	REF
629-9781-001	24-11	1
629-9782-001	1-9	1
629-9783-001	24-18	1
629-9848-001	17-30	1
629-9875-001	10-94	1
629-9885-001	24-14	2
629-9886-001	24-18	2
629-9887-001	19-33	1
629-9888-001	18-21	1
629-9888-002	18-27	1
629-9889-002	17-5	1
	18-	REF
629-9892-002	17-1	1
629-9894-001	17-36	1
629-9894-002	17-39	1
629-9894-003	17-40	1
629-9894-004	17-41	1
629-9912-001	8-45	
	8-139	2
629-9912-002	8-48	
	8-138	2
629-9915-001	17-21	1
629-9931-001	9-11	4
629-9950-001	17-19	1
	20-	REF
629-9951-001	17-16	1
	20-	REF
629-9978-011	2-36	1
629-9978-012	2-37	1
629-9978-013	2-35	1
629-9978-014	2-32	1
629-9978-015	2-8	1
629-9978-016	2-10	1
629-9978-017	2-12	1
629-9978-018	2-9	1
629-9978-019	2-11	1
629-9978-020	2-13	1
629-9978-031	2-34	1
629-9996-001	17-32	1
632-5203-001	2-25	1
634-9307-001	10-62	1
634-9316-001	16-21C	1
634-9318-001	16-21A	1
634-9319-001	24-19	4
634-9681-001	13-18	1
	25-	REF
634-9724-001	25-54	1
634-9724-002	25-56	1
634-9727-001	25-31	1
634-9728-002	25-37	
	25-49	2
634-9728-003	25-14	1
634-9737-001	25-35	1
634-9749-001	10-63	1
635-2288-000	1-1	1
635-8508-001	14-26	1
635-8508-002	14-29	1
635-8510-001	13-28	1
635-8510-002	13-34	1
635-8511-001	13-1	1
635-8512-001	16-40	3
635-8516-001	13-27	1

NUMERICAL INDEX

PART NUMBER	FIG-ITEM	TTL REQ
635-8516-001	14-	REF
635-8517-001	13-16	1
635-8680-001	16-2	1
635-9615-001	2-23	1
637-2718-001	13-18	1
	16-	REF
637-2720-001	14-30	1
	15-	REF
637-4321-001	13-5	
	13-6	
	13-10	3
638-1123-001	15-73	1
638-2197-001	24-4	1
638-2230-001	5-5	1
638-2234-001	24-20	1
638-2236-001	24-1	1
638-2236-002	24-3	1
638-2239-001	24-28	1
638-2239-002	24-33	1
638-2387-001	24-2	4
638-2414-001	24-21	1
638-2415-001	24-24	1
638-2470-001	5-2	1
	6-	REF
638-2471-001	6-37A	1
638-2471-002	6-37A	1
638-2471-003	6-37A	1
638-2471-004	6-37A	1
638-2471-005	6-37A	1
638-2471-006	6-37A	1
638-2471-007	6-37A	1
638-2472-001	6-38A	1
638-2472-002	6-38A	1
638-2472-003	6-38A	1
638-2472-004	6-38A	1
638-2473-001	6-11A	1
638-2473-002	6-11A	1
638-2473-003	6-11A	1
638-2473-004	6-11A	1
638-2474-001	6-39A	1
638-2474-002	6-39A	1
638-2474-003	6-39A	1
638-2474-004	6-39A	1
638-2474-005	6-39A	1
638-2474-006	6-39A	1
638-2474-007	6-39A	1
638-2475-001	6-40A	1
638-2475-002	6-40A	1
638-2475-003	6-40A	1
638-2475-004	6-40A	1
638-2476-001	6-9A	1
638-2476-002	6-9A	1
638-2476-003	6-9A	1
638-2476-004	6-9A	1
638-2476-005	6-9A	1
638-2477-001	6-41A	1
638-2477-002	6-41A	1
638-2477-003	6-41A	1
638-2477-004	6-41A	1
638-2477-005	6-41A	1
638-2477-006	6-41A	1
638-2477-007	6-41A	1
638-2480-001	6-1	1
638-2481-001	6-1A	1
638-7556-001	22-82	1
638-7938-001	23-41	1
64X203	11-2	1
647-4013-001	15-98A	1
662-0636-010	17-4	1
66801	20-6	
	20-7	2
673-0699-010	13-14	1
68NM40	5-6	
	24-11	
	24-18	
	24-21	12
68NM62	17-15	2
68NM82	17-10	
	17-14	4
705-0946-000	11-36	1
705-0967-000	16-14	1
705-0973-000	7-28	1
705-0980-000	15-100	1
705-0988-000	16-34	1
705-0989-000	19-49	1
705-0990-000	7-121	
	19-45	2
705-0991-000	7-99	
	13-13	
	25-11	3
705-0994-000	11-40	1
705-0996-000	25-28	1
705-1001-000	8-145	1
705-1009-000	19-36	1
705-1011-000	15-102	1
705-1012-000	11-49	
	19-42	2
705-1013-000	15-29	1
705-1018-000	15-39	1
705-1020-000	16-30	
	25-4	2
705-1021-000	15-30	1
705-1024-000	8-144	
	11-46	2
705-1025-000	19-50	1
705-1026-000	13-12	1
705-1027-000	15-101	1
705-1030-000	11-7	
	11-73	
	11-124	
	16-29	4
705-1034-000	11-39	1
705-1037-000	19-35	1
705-1044-000	8-163	
	8-164	
	8-165	
	11-38	
	11-39	
	11-39	
	11-65	
	11-72	
	11-74	
	11-76	
	22-26	11
705-1046-000	11-31	1
705-1048-000	7-51	1

NUMERICAL INDEX

PART NUMBER	FIG-ITEM	TTL REQ
705-1051-000	11-39	1
705-1053-000	22-23	1
705-1056-000	11-133	1
705-1065-000	11-56	
	11-63	2
705-1072-000	11-63	1
705-1076-000	15-74	AR
705-1077-000	15-74	AR
705-1078-000	15-74	AR
705-1079-000	15-74	AR
705-1080-000	11-105	1
	15-74	AR
705-1081-000	15-74	AR
705-1082-000	15-74	AR
705-1083-000	15-74	AR
705-1084-000	15-74	AR
705-1085-000	15-74	AR
705-1086-000	15-74	AR
705-1087-000	15-74	AR
705-1088-000	15-74	AR
705-1089-000	15-74	AR
705-1090-000	15-74	AR
705-1091-000	15-74	AR
705-1092-000	11-79	
	11-91	
	11-108	
	15-74	AR
	15-75	4
705-1093-000	15-74	AR
705-1094-000	15-74	AR
705-1099-000	11-132	1
705-1115-000	11-28	
	11-66	2
705-3600-720	25-27	1
705-3600-780	16-14	1
705-3601-420	7-114	
	7-115	2
705-3604-030	11-103	
	11-104	2
705-3604-090	11-148	
	11-164	2
705-3604-150	11-43	
	11-146A	2
705-3605-020	16-29	1
705-3605-080	22-53	1
705-3605-100	16-33	1
705-3605-190	11-19	
	11-49	2
705-3605-240	11-48	1
705-3605-310	11-39	1
705-3605-390	11-149	1
705-3605-460	11-50	
	11-135	2
705-3605-530	11-134	1
705-3605-810	11-18	
	11-109	2
705-5973-530	11-53	1
705-5973-910	11-158	1
705-5974-120	11-88	1
705-5974-200	11-158	1
705-5974-240	11-87	
	11-158	2
705-5974-320	11-89	1
705-5974-660	7-70	1
705-5974-820	7-71	1
705-5974-960	7-49	1
705-5974-980	11-90	1
705-5975-040	11-10	1
705-5975-410	11-88	1
705-5975-470	7-65	
	11-87	
	11-147	
	11-153	4
705-5975-490	8-148	1
705-5975-510	11-89	1
705-5975-550	11-12	1
705-5975-600	11-11	1
705-5975-750	7-102	
	11-12	2
705-5975-810	7-110	1
705-5975-830	7-78	1
705-5975-930	7-116	1
705-5975-970	22-67	1
705-5976-020	11-9	1
705-5976-060	11-20	1
705-5976-080	11-90	1
705-5976-220	7-92	1
705-5976-240	22-64	1
705-5976-260	7-98	
	11-9	2
705-5976-640	11-8	1
705-5976-760	11-8	1
705-5976-800	7-125	1
705-5976-840	7-29	1
705-5976-880	7-126	1
705-5976-980	7-124	1
705-5977-090	7-82	
	7-86	2
705-5977-210	7-80	1
705-5977-410	11-107	
	11-152	2
705-5977-770	7-90	1
74153PC	8-91	
	8-94	2
745-0676-000	25-32	1
745-0701-000	7-24	
	7-37	
	7-38	
	22-16	4
745-0702-000	16-1	1
745-0706-000	25-17	
	25-26	2
745-0711-000	15-113	1
745-0712-000	16-1	1
745-0716-000	22-19	1
745-0719-000	15-46	
	15-51	2
745-0725-000	15-129	1
745-0726-000	13-20	1
745-0728-000	15-52	
	15-126	
	19-41	3
745-0730-000	15-115	
	15-130	2
745-0731-000	7-13	1
745-0734-000	7-18	

NUMERICAL INDEX

PART NUMBER	FIG-ITEM	TTL REQ
745-0734-000	7-20	2
745-0737-000	23-12	
	26-36	
	26-37	3
745-0738-000	15-134	1
745-0740-000	20-3	1
745-0743-000	15-53	
	15-140	
	19-39	3
745-0748-000	11-27	
	11-70	
	12-39	
	15-152	
	15-159	
	16-11	6
745-0749-000	7-36	
	12-3	
	12-9	
	12-10	
	12-13	
	12-30	
	12-50	
	12-60	
	12-61	
	19-29	
	22-18	
	22-40	
	23-1	
	23-2	
	23-6	
	23-13	
	23-26	
	23-38	
	23-39	
	23-40	20
745-0754-000	15-128	1
745-0755-000	7-3	
	7-58	
	7-106	
	7-135	
	26-28	
	26-43	6
745-0761-000	7-122	1
745-0764-000	7-16	
	22-37	2
745-0766-000	15-160	1
745-0773-000	7-146	
	8-83	
	8-146	
	26-7	
	26-8	
	26-9	
	26-10	
	26-11	8
745-0782-000	11-55	
	11-62	2
745-0785-000	7-50	
	8-82	
	8-156	
	11-26	
	11-83	
	11-99	
	11-100	

PART NUMBER	FIG-ITEM	TTL REQ
745-0785-000	11-169	
	11-170	
	12-59	
	15-36	
	21-44	
	22-36	
	22-75	
	23-6	
	23-26	
	26-34	17
745-0797-000	7-36	1
745-0803-000	8-87	
	11-117	2
745-0809-000	7-2	
	7-60	
	7-136	
	7-145	
	11-25	
	22-33	6
745-0821-000	7-1	
	7-8	
	7-61	
	7-139	
	7-144	
	11-81	
	11-82	
	11-166	
	11-167	9
745-0845-000	7-100	
	7-101	
	7-103	
	7-111	
	7-112	
	7-113	6
745-1352-000	22-44	1
745-1394-000	18-4	
	18-6	
	22-28	3
745-1863-010	10-9	
	10-14	
	16-25	
	25-20	4
745-1863-020	25-3	
	25-44	2
745-1863-030	15-133	
	16-18	2
745-1863-050	10-14	
	10-15	
	16-25A	3
745-1863-070	16-5	1
745-1863-080	10-27	
	10-69	2
745-1863-100	25-50	1
745-1863-140	10-67	
	10-73	
	25-40	3
745-1863-160	13-15	1
745-1863-180	10-22	
	10-59	
	10-61A	
	12-21	
	15-120	5
745-1863-200	13-15	1

NUMERICAL INDEX

PART NUMBER	FIG-ITEM	TTL REQ
745-1863-250	10-63	
	25-21	2
745-1863-270	10-21	
	10-23	
	10-25	3
745-1863-290	10-23	
	10-65	
	10-66	
	10-74	
	10-76	
	25-39	
	25-41	7
745-1863-310	25-15	
	25-45	2
745-1863-320	10-63	AR
	15-117	1
745-1863-330	10-63	AR
	15-63	
	25-48	
	25-51	3
745-1863-340	10-63	AR
	16-37	1
745-1863-350	10-63	AR
745-1863-360	10-63	AR
	16-6	
	16-31	2
745-1863-370	10-63	AR
745-1863-380	10-63	AR
745-1863-390	10-63	AR
	15-62	1
745-1863-400	10-63	AR
	15-135	
	15-136	
	16-16	
	16-19	4
745-1863-410	10-63	AR
745-1863-420	10-11	
	10-63	AR
	12-31	2
745-1863-430	10-63	AR
	12-20	1
745-1863-440	10-63	AR
745-1863-450	10-63	AR
745-1863-460	10-63	AR
745-1863-470	10-63	AR
745-1863-480	10-63	AR
745-1863-490	10-63	AR
	25-38	1
745-1863-500	10-63	AR
745-1863-520	10-63	AR
	15-88	1
745-1863-540	10-63	AR
745-1863-560	10-63	AR
745-1863-580	10-63	AR
745-1863-600	10-63	AR
745-1863-620	10-47	
	10-49	2
	10-63	AR
745-1863-640	10-63	AR
	15-12	1
745-1863-660	10-63	AR
745-1863-680	15-87	1
745-1863-740	10-45	
745-1863-740	10-51	2
745-1863-790	10-43	
	10-53	2
745-1863-810	10-41	
	10-43	
	10-45	
	10-47	
	10-49	
	10-51	
	10-53	
	10-55	8
745-1864-010	15-71	
	15-72	
	15-78	
	15-79	4
745-2292-000	21-55	1
745-2311-000	4-11	
	4-13	
	4-14	
	4-16	
	4-17	
	4-19	
	4-23	
	4-25	8
745-2323-000	15-1	
	15-21	2
745-2326-000	6-25	1
745-2329-000	6-47	
	6-48	2
745-2341-000	3-23	
	3-24	
	3-25	
	3-26	
	3-44	
	3-45	
	3-46	
	3-47	
	3-105	
	3-109	
	3-113	
	3-121	
	3-123	
	3-139	
	6-4	
	6-18	
	6-20	
	6-26	
	6-64	
	6-66	
	6-74	
	6-75	
	6-76	
	6-77	
	6-78	
	6-79	
	6-80	
	6-81	
	8-24	
	8-29	
	15-6	
	15-13	
	15-18	
	15-57	

NUMERICAL INDEX

PART NUMBER	FIG-ITEM	TTL REQ
745-2341-000	15-58	
	15-64	
	15-69	
	15-104	
	15-146	
	23-9A	
	23-36A	
	23-40A	42
745-2347-000	21-54	1
745-2353-000	15-3	
	15-89	2
745-2365-000	8-12	
	8-13	2
745-2377-000	15-7	
	15-8	
	15-94	
	15-95	4
745-2413-000	6-68	1
745-2437-000	8-97	
	8-101	
	8-102	
	8-103	
	8-104	5
745-5638-000	17-13	1
745-5652-000	17-11	1
747-2183-970	11-140A	1
747-2183-980	25-5	1
747-4230-130	15-40	1
747-4230-170	15-31	1
747-4230-290	15-40	1
747-4231-780	16-23	1
747-4232-310	16-23	
	16-32	2
747-4232-700	15-35	1
747-5300-000	19-26	1
747-5347-000	10-12	1
747-5385-000	10-2	1
747-5400-000	19-2	
	19-4	
	19-6	
	19-7	
	19-8	
	19-9	
	19-10	
	19-11	
	19-12	9
747-5417-000	19-23	1
747-5539-000	19-1	
	19-3	
	19-5	3
7495P	8-100	1
768-3177-004	3-144	
	5-7	9
768-3177-022	2-56	8
768-5919-003	3-146	
	11-64	
	19-58	5
7717-15N	16-22A	1
7717-19SN	15-119A	4
778-9422-001	4-35	
	8-153	9
778-9422-023	3-147	8
778-9422-047	12-81	4
7815UC	19-21	1
7824UC	19-18	1
8141M100C0G682J	7-83	
	7-94	2
827S	24-19	4
86905-1	24-27	1
88381-7	24-23	1
911	17-12	2
912-2735-000	7-22	1
912-2867-000	11-119	
	11-146	2
912-3339-000	7-109	1
912-4141-010	11-34	
	11-42	
	11-54	
	11-145A	4
912-4141-020	11-42	
	11-110	
	11-111	
	11-163	4
912-4141-050	8-88	
	11-131A	
	15-141	
	15-142	4
912-4141-080	8-80	1
912-4141-150	11-32	
	11-121	2
912-4141-200	13-17	
	15-118	2
912-4141-220	11-40A	
	15-132	
	22-62	3
912-4141-300	11-29	
	11-33	
	11-122	
	11-131A	
	11-157	
	15-4	
	15-19	7
912-4141-400	11-21	
	11-71	
	11-77	
	11-86	
	15-92	5
912-4141-450	7-117	1
912-4141-480	15-84	
	15-85	
	22-66	3
912-4141-490	12-47	1
912-4141-520	7-118	1
913-1187-000	17-24	
	17-25	
	17-27	
	17-28	4
913-3117-070	7-120	1
913-3117-090	7-97	1
913-3279-270	11-13	
	11-16	
	11-17	
	11-22	
	11-24	
	11-37	
	11-44	

NUMERICAL INDEX

PART NUMBER	FIG-ITEM	TTL REQ
913-3279-270	11-51	
	11-57	
	11-58	
	11-69	
	11-78	
	11-80	
	11-85	
	11-113	
	11-116	
	11-118	
	11-120	
	11-140	
	11-143	
	11-144	
	11-145	
	11-150	
	11-154	
	11-156	
	11-160	
	11-161	
	11-165	
	11-168	
	12-1	
	12-5	
	12-7	
	12-12	
	12-17	
	12-18	
	12-32	
	12-42	
	12-51	
	12-57	39
913-3281-390	7-83	
	7-94	2
913-4002-000	7-29A	1
913-4003-000	7-29A	1
913-4006-000	7-7	
	7-15	
	7-56	
	7-64	
	7-76	
	7-131	
	7-133	7
913-4010-000	23-10	1
913-4014-000	15-24	
	15-25	
	15-27	
	15-114	
	15-122	
	15-137	
	19-34	
	19-48	
	22-57	
	22-65	10
913-4018-000	7-9	
	7-11	
	7-14	
	7-27	
	15-2	
	15-5	
	15-14	
	15-17	
	15-50	

PART NUMBER	FIG-ITEM	TTL REQ
913-4018-000	15-59	
	15-65	
	15-68	
	15-86	
	15-99	
	15-105	
	15-106	
	15-109	
	15-110	
	15-127	
	15-139	
	15-144	
	15-145	
	15-147	
	15-148	
	15-150	
	15-153	
	15-155	
	15-157	
	15-161	
	15-162	
	16-8	
	16-12	
	16-21	
	16-26	
	16-27	
	25-6	
	25-8	
	25-9	
	25-10	39
913-5019-030	7-26	
	7-33	
	7-39	
	7-107	
	8-142	5
913-5019-060	6-88	
	7-26	
	26-42	3
913-5019-070	7-104	
	8-158	2
913-5019-120	7-31	
	7-35	2
913-5019-140	7-53	1
913-5019-200	3-7	
	3-34	
	3-70	
	3-72	
	3-77	
	3-83	
	3-87	
	3-90	
	3-95	
	3-98	
	3-102	
	3-104	
	3-108	
	3-118	
	3-127	
	3-138	
	3-141	
	6-46	
	8-172	
	11-172	

NUMERICAL INDEX

PART NUMBER	FIG-ITEM	TTL REQ
913-5019-200	15-73	
	15-76	
	15-77	
	15-90	
	23-11	
	23-17	
	23-21	
	23-23	
	23-30	
	23-33	
	23-35	
	25-33	
	26-2	
	26-3	
	26-5	
	26-13	
	26-16	
	26-18	
	26-19	
	26-27	
	26-30	
	26-40	
	26-41	
	26-45	44
913-5019-320	6-3	
	6-19	
	6-21	
	6-22	
	6-30	
	6-31	
	6-34	
	6-37	
	6-43	
	6-52	
	6-59	
	6-61	
	6-67	
	6-84	
	6-87	
	10-6	
	10-10	
	10-28	18
913-5019-440	7-21	
	7-41	
	7-42	
	7-46	
	7-123	
	8-20	
	8-25	
	8-30	
	8-36	
	8-49	
	8-59	
	8-66	
	8-73	
	8-107	
	8-108	
	8-116	
	8-120	
	8-127	
	8-128	
	8-134	
	8-141	
913-5019-440	8-143	
	8-147	
	8-149	
	8-154	
	8-155	
	8-162	
	8-168	
	8-170	
	8-171	
	8-175	
	11-14	
	11-141	
	13-2	
	13-3	
	15-11	
	15-20	
	15-45	
	15-49	
	15-56	
	19-14	
	19-19	
	19-22	
	19-27	
	19-28	
	19-31	
	19-40	
	19-44	
	19-46	
	21-5	
	21-9	
	21-13	
	21-19	
	21-22	
	21-39	
	21-46	
	22-2	
	22-22	
	22-27	
	22-29	
	22-56	
	22-63	
	22-73	
	22-77	64
913-5019-480	19-17	
	19-20	2
913-5019-520	13-8	1
914-3098-510	10-40	
	10-62	2
914-3098-590	10-13	
	10-18	2
914-3098-640	10-3	
	10-8	
	10-16	
	10-20	
	10-26	
	10-29	
	10-30	
	10-31	
	10-32	
	10-33	
	10-34	
	10-35	
	10-39	

NUMERICAL INDEX

PART NUMBER	FIG-ITEM	TTL REQ	PART NUMBER	FIG-ITEM	TTL REQ
914-3098-640	10-57				
	10-62				
	10-68				
	10-70				
	10-72				
	10-86				
	12-22				
	12-23				
	12-26				
	12-27				
	16-3				
	16-10				
	16-13				
	16-17				
	16-35				
	16-36				
	25-2				
	25-16				
	25-18				
	25-25				
	25-29				
	25-34				
	25-42				
	25-43				
	25-52	38			
914-3098-710	10-62A	AP			
914-3098-720	10-62A	AR			
914-3105-320	10-18	1			
917-1222-000	8-81	1			
917-1256-010	10-13				
	10-77				
	25-13				
	25-23				
	25-36	5			
917-1256-020	16-4				
	16-39	2			
917-1256-030	16-24				
	25-22	2			
922-0583-030	10-77	1			
922-6100-040	15-10				
	15-80				
	15-81	3			
922-6119-010	10-42				
	10-44				
	10-46				
	10-48				
	10-50				
	10-52				
	10-54				
	10-56	8			
933-0264-130	11-106	1			
933-0264-200	11-102	1			
933-1039-230	7-62				
	7-63				
	7-67				
	7-68				
	7-137				
	7-138				
	7-142				
	7-143	8			
933-1084-250	11-159	1			
933-1084-370	11-30	1			

4. REFERENCE DESIGNATION INDEX

REFERENCE DESIGNATION	FIG-ITEM	PART NUMBER
A1	1-12	629-9730-002
A1	2-	629-9730-002
A1A1	2-56	601-4914-001
A1A1	3-	601-4914-001
A1A1C1	3-142	M39003-01-2257
A1A1C10	3-102	CK05BX103K
A1A1C11	3-138	CK05BX103K
A1A1C12	3-127	CK05BX103K
A1A1C13	3-118	CK05BX103K
A1A1C14	3-108	CK05BX103K
A1A1C15	3-104	CK05BX103K
A1A1C16	3-70	CK05BX103K
A1A1C17	3-7	CK05BX103K
A1A1C18	3-34	CK05BX103K
A1A1C2	3-141	CK05BX103K
A1A1C3	3-72	CK05BX103K
A1A1C4	3-77	CK05BX103K
A1A1C5	3-83	CK05BX103K
A1A1C6	3-87	CK05BX103K
A1A1C7	3-90	CK05BX103K
A1A1C8	3-95	CK05BX103K
A1A1C9	3-98	CK05BX103K
A1A1R1	3-139	RCR05G102KS
A1A1R10	3-26	RCR05G102KS
A1A1R11	3-47	RCR05G102KS
A1A1R12	3-46	RCR05G102KS
A1A1R13	3-45	RCR05G102KS
A1A1R14	3-44	RCR05G102KS
A1A1R2	3-123	RCR05G102KS
A1A1R3	3-121	RCR05G102KS
A1A1R4	3-113	RCR05G102KS
A1A1R5	3-109	RCR05G102KS
A1A1R6	3-105	RCR05G102KS
A1A1R7	3-24	RCR05G102KS
A1A1R8	3-25	RCR05G102KS
A1A1R9	3-23	RCR05G102KS
A1A1S1	3-1	DC51-64
A1A1S10	3-22	DC51-01
A1A1S11	3-27	DC51-64
A1A1S12	3-29	DC51-01
A1A1S13	3-31	DC51-64
A1A1S14	3-68	DC51-64
A1A1S15	3-2	DC51-64
A1A1S16	3-4	DC51-64
A1A1S17	3-8	DC51-01
A1A1S18	3-10	DC51-01
A1A1S19	3-12	DC51-64
A1A1S2	3-3	DC51-64
A1A1S20	3-15	DC51-01
A1A1S21	3-17	DC51-01
A1A1S22	3-19	DC51-01
A1A1S23	3-21	DC51-01
A1A1S24	3-28	DC51-01
A1A1S25	3-30	DC51-01
A1A1S26	3-39	DC51-01
A1A1S27	3-66	DC51-64
A1A1S28	3-65	DC51-64
A1A1S29	3-64	DC51-64
A1A1S3	3-5	DC51-64
A1A1S30	3-62	DC51-01
A1A1S31	3-60	DC51-01
A1A1S32	3-58	DC51-64
A1A1S33	3-55	DC51-01
A1A1S34	3-53	DC51-01
A1A1S35	3-51	DC51-01
A1A1S36	3-49	DC51-01
A1A1S37	3-42	DC51-01
A1A1S38	3-41	DC51-01
A1A1S39	3-40	DC51-01
A1A1S4	3-9	DC51-64
A1A1S43	3-61	DC51-01
A1A1S44	3-59	DC51-01
A1A1S45	3-57	DC51-64
A1A1S46	3-54	DC51-01
A1A1S47	3-52	DC51-01
A1A1S48	3-50	DC51-64
A1A1S49	3-48	DC51-01
A1A1S5	3-11	DC51-01
A1A1S6	3-13	DC51-64
A1A1S7	3-16	DC51-01
A1A1S8	3-18	DC51-01
A1A1S9	3-20	DC51-01
A1A1U1	3-71	N74LS00N
A1A1U10	3-82	SN74LS174N
A1A1U11	3-84	SN74LS174N
A1A1U12	3-85	SN74LS174N
A1A1U13	3-86	SN74LS174N
A1A1U15	3-88	SN74LS174N
A1A1U16	3-89	SN74LS174N
A1A1U18	3-91	SN74LS174N
A1A1U19	3-92	SN74LS138N
A1A1U2	3-73	SN74LS174N
A1A1U20	3-93	SN74LS174N
A1A1U21	3-94	SN7406N
A1A1U22	3-96	SN74LS174N
A1A1U23	3-97	SN74LS174N
A1A1U25	3-99	SN74LS174N
A1A1U26	3-100	SN74LS174N
A1A1U27	3-101	N8T97N
A1A1U28	3-143	DM74LS10N
A1A1U29	3-140	DM7447AN
A1A1U3	3-74	SN74LS174N
A1A1U30	3-137	DM7447AN
A1A1U31	3-136	DM7447AN
A1A1U32	3-135	SN7406N
A1A1U33	3-134	DM7447AN
A1A1U34	3-133	SN7406N
A1A1U35	3-132	DM7447AN
A1A1U36	3-131	SN7406N
A1A1U37	3-130	SN7406N
A1A1U38	3-129	DM7447AN
A1A1U39	3-128	SN7406N

REFERENCE DESIGNATION INDEX

REFERENCE DESIGNATION	FIG-ITEM	PART NUMBER
A1A1U4	3-75	SN74LS174N
A1A1U40	3-126	DM7447AN
A1A1U41	3-125	DM7447AN
A1A1U42	3-124	SN7406N
A1A1U43	3-122	DM7447AN
A1A1U44	3-120	DM7447AN
A1A1U45	3-119	SN7406N
A1A1U46	3-117	DM7447AN
A1A1U47	3-116	SN74LS138N
A1A1U48	3-115	DM74LS02N
A1A1U49	3-114	SN7406N
A1A1U5	3-76	SN74LS138N
A1A1U50	3-112	DM7447AN
A1A1U51	3-111	DM7447AN
A1A1U52	3-110	SN7406N
A1A1U53	3-107	DM7447AN
A1A1U54	3-106	SN7406N
A1A1U55	3-103	N74LS32N
A1A1U56	3-69	SN74LS174N
A1A1U57	3-67	ULN2003A
A1A1U58	3-6	SN74LS174N
A1A1U59	3-63	ULN2003A
A1A1U6	3-78	SN74LS174N
A1A1U60	3-14	SN74LS174N
A1A1U61	3-56	ULN2003A
A1A1U62	3-43	SN74LS174N
A1A1U63	3-32	N8T97N
A1A1U64	3-33	SN74LS74AN
A1A1U65	3-37	SN74LS174N
A1A1U66	3-36	N8T97N
A1A1U67	3-35	N8T97N
A1A1U68	3-38	ULN2003A
A1A1U7	3-79	SN7406N
A1A1U8	3-80	SN74LS174N
A1A1U9	3-81	SN74LS174N
A1A2	2-55	601-4913-002
A1A2	4-	601-4913-002
A1A2CR1	4-37	5082-4670
A1A2CR10	4-64	5082-4670
A1A2CR11	4-69	5082-4670
A1A2CR12	4-70	5082-4670
A1A2CR13	4-71	5082-4670
A1A2CR15	4-32	5082-4670
A1A2CR17	4-30	5082-4670
A1A2CR19	4-26	5082-4670
A1A2CR2	4-36	5082-4670
A1A2CR21	4-24	5082-4670
A1A2CR23	4-20	5082-4670
A1A2CR25	4-18	5082-4670
A1A2CR27	4-15	5082-4670
A1A2CR29	4-12	5082-4670
A1A2CR3	4-38	5082-4670
A1A2CR31	4-10	5082-4670
A1A2CR33	4-9	5082-4670
A1A2CR35	4-4	5082-4670
A1A2CR37	4-2	5082-4670
A1A2CR4	4-34	5082-4670
A1A2CR5	4-47	5082-4670
A1A2CR6	4-48	5082-4670
A1A2CR7	4-49	5082-4670
A1A2CR8	4-62	5082-4670
A1A2CR9	4-63	5082-4670
A1A2DS1	4-41	5082-7650
A1A2DS10	4-59	5082-7650
A1A2DS11	4-60	5082-7650
A1A2DS12	4-66	5082-7650
A1A2DS13	4-67	5082-7650
A1A2DS14	4-68	5082-7650
A1A2DS2	4-42	5082-7650
A1A2DS3	4-43	5082-7650
A1A2DS4	4-44	5082-7650
A1A2DS5	4-45	5082-7650
A1A2DS6	4-53	5082-7650
A1A2DS7	4-54	5082-7650
A1A2DS8	4-56	5082-7650
A1A2DS9	4-57	5082-7650
A1A2P1A	4-29	372-2624-052
A1A2P1B	4-6	372-2624-047
A1A2R1	4-25	RCR05G151KS
A1A2R2	4-23	RCR05G151KS
A1A2R3	4-19	RCR05G151KS
A1A2R4	4-17	RCR05G151KS
A1A2R5	4-16	RCR05G151KS
A1A2R6	4-14	RCR05G151KS
A1A2R7	4-13	RCR05G151KS
A1A2R8	4-11	RCR05G151KS
A1A2U1	4-22	314B151
A1A2U10	4-52	314B151
A1A2U11	4-55	314B151
A1A2U12	4-58	314B151
A1A2U13	4-61	314B151
A1A2U14	4-65	314B151
A1A2U15	4-7	314B151
A1A2U16	4-3	314B151
A1A2U17	4-72	314B151
A1A2U18	4-33	314B151
A1A2U19	4-1	314B151
A1A2U2	4-51	314B151
A1A2U3	4-8	314B151
A1A2U4	4-39	314B151
A1A2U5	4-31	314B151
A1A2U6	4-27	314B151
A1A2U7	4-46	314B151
A1A2U8	4-50	314B151
A1A2U9	4-21	314B151
A1A2XDS1	4-40	TSW3800-14BW
A1A2XDS10	4-40	TSW3800-14BW
A1A2XDS11	4-40	TSW3800-14BW
A1A2XDS12	4-40	TSW3800-14BW
A1A2XDS13	4-40	TSW3800-14BW
A1A2XDS14	4-40	TSW3800-14BW
A1A2XDS2	4-40	TSW3800-14BW
A1A2XDS3	4-40	TSW3800-14BW
A1A2XDS4	4-40	TSW3800-14BW
A1A2XDS5	4-40	TSW3800-14BW
A1A2XDS6	4-40	TSW3800-14BW
A1A2XDS7	4-40	TSW3800-14BW
A1A2XDS8	4-40	TSW3800-14BW
A1A2XDS9	4-40	TSW3800-14BW
A1P1	2-61	1625-6P1
A1S53	2-57	266-7508-090
A1S54	2-58	NE15F01-0003-00
A10	1-3	601-5883-001
A10	1-3	601-2309-001
A10	23-	601-5883-001
A10	26-	601-2309-001

REFERENCE DESIGNATION INDEX

REFERENCE DESIGNATION	FIG-ITEM	PART NUMBER
A10CR1	23-7	1N4454GE
A10CR1	26-35	1N4454GE
A10C1	23-10	CK05BX221K
A10C1	26-2	CK05BX103K
A10C10	23-27	M39003-01-2254
A10C10	23-27	M39003-01-2286
A10C10	26-38	M39003-01-2286
A10C11	26-32	M39003-01-2254
A10C12	26-42	CK05BX270K
A10C13	26-27	CK05BX103K
A10C14	26-5	CK05BX103K
A10C15	26-16	CK05BX103K
A10C2	23-4	M39003-01-2286
A10C2	23-4	M39003-01-2254
A10C2	26-3	CK05BX103K
A10C3	23-11	CK05BX103K
A10C3	26-13	CK05BX103K
A10C4	23-35	CK05BX103K
A10C4	26-45	CK05BX103K
A10C5	23-17	CK05BX103K
A10C5	26-18	CK05BX103K
A10C6	23-33	CK05BX103K
A10C6	26-19	CK05BX103K
A10C7	23-30	CK05BX103K
A10C7	26-40	CK05BX103K
A10C8	23-23	CK05BX103K
A10C8	26-41	CK05BX103K
A10C9	23-21	CK05BX103K
A10C9	26-30	CK05BX103K
A10P1	26-25	372-2622-074
A10R1	23-2	RCR07G102KS
A10R1	26-7	RCR07G472KS
A10R10	23-40A	RCR05G102KS
A10R10	26-36	RCR07G471KS
A10R11	23-9A	RCR05G102KS
A10R12	23-36A	RCR05G102KS
A10R2	23-1	RCR07G102KS
A10R2	26-8	RCR07G472KS
A10R3	23-40	RCR07G102KS
A10R3	26-9	RCR07G472KS
A10R4	23-39	RCR07G102KS
A10R4	26-10	RCR07G472KS
A10R5	23-12	RCR07G471KS
A10R5	26-11	RCR07G472KS
A10R6	23-13	RCR07G102KS
A10R6	26-43	RCR07G152KS
A10R7	23-38	RCR07G102KS
A10R7	26-28	RCR07G152KS
A10R8	23-6	RCR07G102KS
A10R8	23-6	RCR07G103KS
A10R8	26-34	RCR07G103KS
A10R9	23-26	RCR07G103KS
A10R9	23-26	RCR07G102KS
A10R9	26-37	RCR07G471KS
A10S1	23-5	A10040-105
A10S1	26-12	01-70-0305
A10U1	23-8	50459-932459
A10U1	26-39	SN74LS245N
A10U10	23-32	N8T97N
A10U10	26-29	MC3448AP
A10U11	23-31	N74LS00N
A10U11	26-20	MC3448AP
A10U12	23-29	N8T97N
A10U12	26-26	MC3448AP
A10U13	23-25	MC3441AP
A10U13	26-17	N74LS32N
A10U14	23-22	MC3441AP
A10U15	23-19	MC3441AP
A10U16	23-20	MC3441AP
A10U17	23-28	SN74LS139N
A10U18	23-40B	SN74LS86N
A10U2	23-37	N74LS04N
A10U2	26-21	MC3448AP
A10U3	23-9	SN7406N
A10U3	26-44	D8291
A10U4	23-14	SN75450BN
A10U4	26-1	SN74LS138N
A10U5	23-36	SN74LS73AN
A10U5	26-6	DM74LS367N
A10U6	23-3	N8T97N
A10U6	26-33	N74LS04N
A10U7	23-16	P8255A
A10U7	26-4	N74LS08N
A10U8	23-18	P8255A
A10U8	26-22	DM74191N
A10U9	23-34	SN74LS73AN
A10U9	26-15	SN74LS74AN
A10XU18	23-40C	TSW3800-14BW
A10Y1	26-31	CR64AU16-0000MHZ
A2	1-16	629-9740-002
A2	5-	629-9740-002
A2A1	5-2	638-2470-001
A2A1	6-	638-2470-001
A2A1	6-1C	601-2099-001
A2A1CR1	6-69	1N4454GE
A2A1C1	6-46	CK05BX103K
A2A1C10	6-21	CK05BX104K
A2A1C11	6-22	CK05BX104K
A2A1C12	6-61	CK05BX104K
A2A1C13	6-87	CK05BX104K
A2A1C14	6-52	CK05BX104K
A2A1C15	6-3	CK05BX104K
A2A1C16	6-59	CK05BX104K
A2A1C17	6-34	CK05BX104K
A2A1C18	6-84	CK05BX104K
A2A1C19	6-19	CK05BX104K
A2A1C2	6-88	CK05BX270K
A2A1C3	6-67	CK05BX104K
A2A1C4	6-30	CK05BX104K
A2A1C5	6-37	CK05BX104K
A2A1C6	6-31	CK05BX104K
A2A1C7	6-43	CK05BX104K
A2A1C8	6-29	M39003-01-2289
A2A1C9	6-65	M39003-01-2289
A2A1P1	6-24	372-2624-038
A2A1R1	6-4	RCR05G102KS
A2A1R10	6-79	RCR05G102KS
A2A1R11	6-76	RCR05G102KS
A2A1R12	6-81	RCR05G102KS
A2A1R13	6-80	RCR05G102KS
A2A1R14	6-18	RCR05G102KS
A2A1R15	6-68	RCR05G104KS
A2A1R16	6-77	RCR05G102KS
A2A1R17	6-64	RCR05G102KS
A2A1R18	6-66	RCR05G102KS
A2A1R2	6-47	RCR05G471KS

REFERENCE DESIGNATION INDEX

REFERENCE DESIGNATION	FIG-ITEM	PART NUMBER
A2A1R3	6-48	RCR05G471KS
A2A1R4	6-25	RCR05G391KS
A2A1R5	6-26	RCR05G102KS
A2A1R6	6-20	RCR05G102KS
A2A1R7	6-75	RCR05G102KS
A2A1R8	6-74	RCR05G102KS
A2A1R9	6-78	RCR05G102KS
A2A1U1	6-45	F4049BPC
A2A1U11	6-51	AM9111BPC
A2A1U12	6-54	AM9111BPC
A2A1U13	6-39A	638-2474-001
A2A1U13	6-39A	638-2474-002
A2A1U13	6-39A	638-2474-003
A2A1U13	6-39A	638-2474-004
A2A1U13	6-39A	638-2474-005
A2A1U13	6-39A	638-2474-006
A2A1U13	6-39A	638-2474-007
A2A1U14	6-40A	638-2475-001
A2A1U14	6-40A	638-2475-002
A2A1U14	6-40A	638-2475-003
A2A1U14	6-40A	638-2475-004
A2A1U15	6-9A	638-2476-001
A2A1U15	6-9A	638-2476-002
A2A1U15	6-9A	638-2476-003
A2A1U15	6-9A	638-2476-004
A2A1U15	6-9A	638-2476-005
A2A1U17	6-86	AM9111BPC
A2A1U18	6-55	AM9111BPC
A2A1U19	6-85	AM9111BPC
A2A1U2	6-2	4040BPC
A2A1U20	6-56	AM9111BPC
A2A1U21	6-37A	638-2471-001
A2A1U21	6-37A	638-2471-002
A2A1U21	6-37A	638-2471-003
A2A1U21	6-37A	638-2471-004
A2A1U21	6-37A	638-2471-005
A2A1U21	6-37A	638-2471-006
A2A1U21	6-37A	638-2471-007
A2A1U22	6-38A	638-2472-001
A2A1U22	6-38A	638-2472-002
A2A1U22	6-38A	638-2472-003
A2A1U22	6-38A	638-2472-004
A2A1U23	6-11A	638-2473-001
A2A1U23	6-11A	638-2473-002
A2A1U23	6-11A	638-2473-003
A2A1U23	6-11A	638-2473-004
A2A1U25	6-83	AM9111BPC
A2A1U26	6-57	AM9111BPC
A2A1U27	6-36	SN74LS138N
A2A1U28	6-35	N8T97N
A2A1U29	6-15	N8T97N
A2A1U3	6-5	SN74LS74AN
A2A1U30	6-14	N8T97N
A2A1U31	6-82	N8T97N
A2A1U32	6-58	N8T97N
A2A1U34	6-33	N8T97N
A2A1U35	6-16	Z80
A2A1U36	6-73	SN74LS139N
A2A1U37	6-60	N74LS32N
A2A1U38	6-32	N74LS00N
A2A1U39	6-28	N8T97N
A2A1U4	6-6	SN74LS191N
A2A1U40	6-72	N8T97N
A2A1U41	6-62	N74LS04N
A2A1U42	6-31A	N74LS32N
A2A1U43	6-27	N8T97N
A2A1U44	6-71	N8T97N
A2A1U45	6-63	SN74LS74AN
A2A1U46	6-70	N74LS32N
A2A1U5	6-7	MC7404P
A2A1U7	6-41A	638-2477-001
A2A1U7	6-41A	638-2477-002
A2A1U7	6-41A	638-2477-003
A2A1U7	6-41A	638-2477-004
A2A1U7	6-41A	638-2477-005
A2A1U7	6-41A	638-2477-006
A2A1U7	6-41A	638-2477-007
A2A1XU10	6-9	TSW3800-24BW
A2A1XU13	6-40	TSW3800-24BW
A2A1XU14	6-41	TSW3800-24BW
A2A1XU15	6-10	TSW3800-24BW
A2A1XU16	6-11	TSW3800-24BW
A2A1XU21	6-38	TSW3800-24BW
A2A1XU22	6-39	TSW3800-24BW
A2A1XU23	6-12	TSW3800-24BW
A2A1XU24	6-13	TSW3800-24BW
A2A1XU35	6-17	D1L8Z40P1
A2A1XU6	6-50	TSW3800-24BW
A2A1XU7	6-42	TSW3800-24BW
A2A1XU8	6-44	TSW3800-24BW
A2A1XU9	6-8	TSW3800-24BW
A2A1Y1	6-49	CR64AU16-0000MHZ
A2A2	5-1	601-4911-001
A2A2	7-	601-4911-001
A2A2C1	7-104	CK05BX330K
A2A2C10	7-109	DM20FD222J04CR
A2A2C100	7-9	CK05BX102K
A2A2C101	7-14	CK05BX102K
A2A2C102	7-29A	CK05BX560K
A2A2C102	7-29A	CK05BX470K
A2A2C11	7-11	CK05BX102K
A2A2C12	7-53	CK05BX332K
A2A2C13	7-7	CK05BX101K
A2A2C15	7-120	1CC0X381X5100C4
A2A2C16	7-118	DM5F401J050WV
A2A2C17	7-117	DM5F221J050WV
A2A2C18	7-26	CK05BX150K
A2A2C18	7-26	CK05BX270K
A2A2C19	7-27	CK05BX102K
A2A2C20	7-31	CK05BX222K
A2A2C21	7-35	CK05BX222K
A2A2C23	7-33	CK05BX150K
A2A2C25	7-39	CK05BX150K
A2A2C27	7-21	CK06BX104K
A2A2C28	7-41	CK06BX104K
A2A2C29	7-48	M39003-01-2289
A2A2C3	7-97	2CC0G681X5100C4
A2A2C30	7-46	CK06BX104K
A2A2C31	7-45	M39003-01-2289
A2A2C32	7-42	CK06BX104K
A2A2C33	7-57	M39003-01-2286
A2A2C34	7-129	M39003-01-2286
A2A2C35	7-132	M39003-01-2286
A2A2C36	7-4	M39003-01-2286
A2A2C37	7-62	PE1S0-1-80-10
A2A2C38	7-63	PE1S0-1-80-10

REFERENCE DESIGNATION INDEX

REFERENCE DESIGNATION	FIG-ITEM	PART NUMBER
A2A2C39	7-142	PE1S0-1-80-10
A2A2C4	7-94	8141M100C0G682J
A2A2C40	7-143	PE1S0-1-80-10
A2A2C41	7-137	PE1S0-1-80-10
A2A2C42	7-138	PE1S0-1-80-10
A2A2C43	7-67	PE1S0-1-80-10
A2A2C44	7-68	PE1S0-1-80-10
A2A2C45	7-56	CK05BX101K
A2A2C46	7-133	CK05BX101K
A2A2C47	7-131	CK05BX101K
A2A2C48	7-64	CK05BX101K
A2A2C49	7-76	CK05BX101K
A2A2C5	7-107	CK05BX150K
A2A2C50	7-123	CK06BX104K
A2A2C6	7-83	8141M100C0G682J
A2A2C7	7-15	CK05BX101K
A2A2C9	7-22	CM07FD103J03
A2A2L1	7-23	MS75089-12
A2A2L10	7-140	MS75089-11
A2A2L11	7-130	MS75089-11
A2A2L12	7-69	MS75089-11
A2A2L13	7-5	MS75089-11
A2A2L2	7-30	MS75089-20
A2A2L3	7-32	MS75089-22
A2A2L4	7-47	MS75088-13
A2A2L5	7-43	MS75088-13
A2A2L6	7-65	MS75089-11
A2A2L7	7-55	MS75089-11
A2A2L8	7-147	MS75089-11
A2A2L9	7-148	MS75089-11
A2A2P1	7-149	372-2624-025
A2A2Q1	7-10	2N4416
A2A2R1	7-72	RT24C2X102
A2A2R10	7-91	RT24C2X502
A2A2R100	7-115	RN60D8063F
A2A2R101	7-114	RN60D8063F
A2A2R102	7-106	RCR07G152KS
A2A2R103	7-24	RCR07G470KS
A2A2R104	7-37	RCR07G470KS
A2A2R105	7-38	RCR07G470KS
A2A2R106	7-99	RN55D7870F
A2A2R108	7-101	RCR07G474KS
A2A2R109	7-103	RCR07G474KS
A2A2R11	7-93	RT24C2X502
A2A2R110	7-98	RN55E2552B
A2A2R112	7-92	RN55E2432B
A2A2R113	7-102	RN55E1402B
A2A2R115	7-100	RCR07G474KS
A2A2R12	7-95	RT24C2X502
A2A2R13	7-112	RCR07G474KS
A2A2R14	7-78	RN55E1542B
A2A2R15	7-85	RN55E1002B
A2A2R16	7-16	RCR07G272KS
A2A2R18	7-90	RN55E1543B
A2A2R2	7-73	RT24C2X102
A2A2R20	7-116	RN55E1742B
A2A2R22	7-110	RN55E1502B
A2A2R23	7-86	RN55E6812B
A2A2R25	7-49	RN55E5491B
A2A2R26	7-50	RCR07G103KS
A2A2R27	7-51	RN55D1212F
A2A2R28	7-8	RCR07G104KS
A2A2R29	7-13	RCR07G331KS
A2A2R3	7-75	RT24C2X502
A2A2R33	7-125	RN55E4872B
A2A2R34	7-124	RN55E6042B
A2A2R35	7-82	RN55E6812B
A2A2R38	7-80	RN55E7872B
A2A2R39	7-126	RN55E5362B
A2A2R4	7-77	RT24C2X502
A2A2R41	7-111	RCR07G474KS
A2A2R42	7-113	RCR07G474KS
A2A2R43	7-29	RN55E5112B
A2A2R44	7-28	RN55D3320F
A2A2R45	7-36	RCR07G223KS
A2A2R45	7-36	RCR07G102KS
A2A2R5	7-79	RT24C2X103
A2A2R51	7-18	RCR07G391KS
A2A2R52	7-20	RCR07G391KS
A2A2R53	7-58	RCR07G152KS
A2A2R54	7-146	RCR07G472KS
A2A2R55	7-135	RCR07G152KS
A2A2R56	7-3	RCR07G152KS
A2A2R57	7-60	RCR07G473KS
A2A2R58	7-145	RCR07G473KS
A2A2R59	7-136	RCR07G473KS
A2A2R6	7-81	RT24C2X502
A2A2R60	7-2	RCR07G473KS
A2A2R61	7-61	RCR07G104KS
A2A2R62	7-144	RCR07G104KS
A2A2R63	7-139	RCR07G104KS
A2A2R64	7-1	RCR07G104KS
A2A2R65	7-71	RN55E4641B
A2A2R67	7-70	RN55E3831B
A2A2R68	7-122	RCR07G222KS
A2A2R69	7-121	RN55D7500F
A2A2R7	7-84	RT24C2X502
A2A2R8	7-87	RT24C2X502
A2A2R9	7-89	RT24C2X103
A2A2U1	7-74	LM101AH
A2A2U10	7-128	F4049BPC
A2A2U11	7-105	LM101AH
A2A2U14	7-34	LM101AH
A2A2U15	7-25	LM101AH
A2A2U16	7-12	LM318H
A2A2U17	7-66	LM108H
A2A2U18	7-6	F4049BPC
A2A2U19	7-52	LM318H
A2A2U2	7-96	CD4053BE
A2A2U20	7-40	LM101AH
A2A2U21	7-59	LM108H
A2A2U22	7-54	F4049BPC
A2A2U3	7-88	CD4053BE
A2A2U4	7-141	LM108H
A2A2U5	7-127	F4049BPC
A2A2U6	7-108	LM101AH
A2A2U7	7-17	LM101AH
A2A2U9	7-134	LM108H
A2A2VR1	7-19	1N752A
A2A2VR2	7-44	1N752A
A2A2VR3	7-119	1N825A
A2A3	5-3	601-4883-001
A2A3	8-	601-4883-001
A2A3C1	8-113	M39003-01-2261
A2A3C11	8-49	CK06BX104K
A2A3C12	8-175	CK06BX104K

REFERENCE DESIGNATION INDEX

REFERENCE DESIGNATION	FIG-ITEM	PART NUMBER
A2A3C13	8-128	CK06BX104K
A2A3C14	8-30	CK06BX104K
A2A3C15	8-66	CK06BX104K
A2A3C16	8-141	CK06BX104K
A2A3C17	8-120	CK06BX104K
A2A3C18	8-127	CK06BX104K
A2A3C19	8-25	CK06BX104K
A2A3C2	8-36	CK06BX104K
A2A3C20	8-116	CK06BX104K
A2A3C21	8-171	CK06BX104K
A2A3C22	8-20	CK06BX104K
A2A3C23	8-59	CK06BX104K
A2A3C24	8-112	M39003-01-2261
A2A3C29	8-168	CK06BX104K
A2A3C3	8-73	CK06BX104K
A2A3C30	8-170	CK06BX104K
A2A3C31	8-149	CK06BX104K
A2A3C32	8-162	CK06BX104K
A2A3C33	8-155	CK06BX104K
A2A3C34	8-147	CK06BX104K
A2A3C35	8-143	CK06BX104K
A2A3C36	8-142	CK05BX150K
A2A3C37	8-158	CK05BX330K
A2A3C38	8-172	CK05BX103K
A2A3C39	8-154	CK06BX104K
A2A3C4	8-134	CK06BX104K
A2A3C40	8-107	CK06BX104K
A2A3C41	8-108	CK06BX104K
A2A3C5	8-105	M39003-01-2289
A2A3C6	8-106	M39003-01-2289
A2A3C7	8-81	538011C0P092R
A2A3C8	8-80	DM5C04CD300WV
A2A3C9	8-88	DM5F101J050WV
A2A3J1	8-37	372-2623-025
A2A3J2	8-40	372-2623-025
A2A3J3	8-181	372-2623-016
A2A3L1	8-114	MS18130-1
A2A3L2	8-115	MS18130-1
A2A3L3	8-109	MS14046-4
A2A3L4	8-111	MS14046-4
A2A3L5	8-157	MS75089-11
A2A3L6	8-169	MS75089-11
A2A3Q1	8-84	2N918
A2A3R10	8-104	RCR05G474KS
A2A3R11	8-148	RN55E1022B
A2A3R21	8-83	RCR07G472KS
A2A3R23	8-164	RN55D1002F
A2A3R24	8-163	RN55D1002F
A2A3R25	8-165	RN55D1002F
A2A3R27	8-144	RN55D3831F
A2A3R28	8-145	RN55D1271F
A2A3R29	8-146	RCR07G472KS
A2A3R3	8-87	RCR07G333KS
A2A3R30	8-156	RCR07G103KS
A2A3R31	8-29	RCR05G102KS
A2A3R32	8-24	RCR05G102KS
A2A3R33	8-12	RCR05G472KS
A2A3R34	8-13	RCR05G472KS
A2A3R35	8-82	RCR07G103KS
A2A3R6	8-102	RCR05G474KS
A2A3R7	8-103	RCR05G474KS
A2A3R8	8-97	RCR05G474KS
A2A3R9	8-101	RCR05G474KS

REFERENCE DESIGNATION	FIG-ITEM	PART NUMBER
A2A3U10	8-43	DM74175N
A2A3U100	8-19	DM74LS02N
A2A3U101	8-18	DM74155N
A2A3U102	8-17	SN74LS175N
A2A3U103	8-62	SN74LS174N
A2A3U104	8-61	SN74LS175N
A2A3U105	8-60	SN74LS175N
A2A3U106	8-58	SN74LS174N
A2A3U107	8-57	DM74LS02N
A2A3U108	8-56	316A472
A2A3U11	8-44	SN74LS86N
A2A3U112	8-98	314A152
A2A3U113	8-99	DM7489J
A2A3U114	8-100	7495P
A2A3U115	8-161	SN74LS175N
A2A3U116	8-160	SN7406N
A2A3U117	8-159	LM101AH
A2A3U118	8-151	AD562KDBIN
A2A3U12	8-45	629-9912-001
A2A3U13	8-77	SN74LS86N
A2A3U14	8-78	SN7483AN
A2A3U17	8-85	MC7404P
A2A3U18	8-86	SN7483AN
A2A3U19	8-180	SN7483AN
A2A3U2	8-1	DM7489J
A2A3U20	8-129	SN74170N
A2A3U21	8-130	SN74LS164N
A2A3U22	8-131	SN74LS164N
A2A3U23	8-132	SN74LS164N
A2A3U24	8-133	SN74LS164N
A2A3U26	8-34	DM7489J
A2A3U27	8-35	314A152
A2A3U28	8-6	SN7483AN
A2A3U29	8-7	SN74LS175N
A2A3U3	8-2	314A152
A2A3U30	8-8	DM7489J
A2A3U31	8-70	SN7483AN
A2A3U32	8-71	SN74170N
A2A3U33	8-72	SN74LS175N
A2A3U34	8-46	SN74LS175N
A2A3U35	8-47	SN74LS86N
A2A3U36	8-48	629-9912-002
A2A3U37	8-124	SN74LS86N
A2A3U38	8-125	SN7483AN
A2A3U39	8-126	SN74LS174N
A2A3U4	8-3	SN7483AN
A2A3U40	8-89	SN74LS174N
A2A3U41	8-90	SN74LS174N
A2A3U42	8-91	74153PC
A2A3U43	8-177	SN74170N
A2A3U44	8-178	314A152
A2A3U45	8-179	DM74175N
A2A3U46	8-135	SN74LS86N
A2A3U47	8-136	SN74LS86N
A2A3U48	8-137	SN74LS174N
A2A3U49	8-31	N74LS00N
A2A3U5	8-4	SN74LS175N
A2A3U50	8-32	N74LS00N
A2A3U51	8-33	DM74LS02N
A2A3U52	8-9	SN74LS74AN
A2A3U53	8-10	314A152
A2A3U54	8-11	DM7489J
A2A3U55	8-67	DM74126N

REFERENCE DESIGNATION INDEX

REFERENCE DESIGNATION	FIG-ITEM	PART NUMBER
A2A3U56	8-68	DM7489J
A2A3U57	8-69	DM74157N
A2A3U58	8-52	SN7483AN
A2A3U59	8-51	SN74LS175N
A2A3U6	8-5	DM7489J
A2A3U60	8-50	SN74LS174N
A2A3U61	8-121	SN74LS174N
A2A3U62	8-122	SN74LS174N
A2A3U63	8-123	MC7404P
A2A3U64	8-92	SN74LS174N
A2A3U65	8-93	SN74LS174N
A2A3U66	8-94	74153PC
A2A3U67	8-173	SN74LS74AN
A2A3U68	8-174	N74LS00N
A2A3U69	8-176	SN74LS86N
A2A3U7	8-74	SN7483AN
A2A3U70	8-138	629-9912-002
A2A3U71	8-139	629-9912-001
A2A3U72	8-140	SN74LS86N
A2A3U73	8-26	SN74LS74AN
A2A3U74	8-27	SN74LS164N
A2A3U75	8-28	SN74LS74AN
A2A3U76	8-14	N74LS00N
A2A3U77	8-15	MC7404P
A2A3U78	8-16	DM7489J
A2A3U79	8-65	DM74126N
A2A3U8	8-75	314A152
A2A3U80	8-64	314A152
A2A3U81	8-63	DM7489J
A2A3U82	8-55	N74161A
A2A3U83	8-54	DM74175N
A2A3U84	8-53	DM74155N
A2A3U85	8-117	DM74LS02N
A2A3U86	8-118	SN74LS74AN
A2A3U87	8-119	DM7489J
A2A3U88	8-95	SN7483AN
A2A3U89	8-96	SN74LS175N
A2A3U9	8-76	SN74170N
A2A3U92	8-166	AD11-125
A2A3U95	8-150	MC1408L-8
A2A3U97	8-23	SN74LS86N
A2A3U98	8-22	N74LS00N
A2A3U99	8-21	DM74LS02N
A2A3Y1	8-79	CR64AU16-0000MHZ
A3	1-6	629-9750-002
A3	9-	629-9750-002
A3A1	9-5	601-5001-001
A3A1	10-	601-5001-001
A3A1CP1	10-58	C114-1
A3A1CR1	10-56	1N5767
A3A1CR2	10-54	1N5767
A3A1CR3	10-52	1N5767
A3A1CR4	10-50	1N5767
A3A1CR5	10-48	1N5767
A3A1CR6	10-46	1N5767
A3A1CR7	10-44	1N5767
A3A1CR8	10-42	1N5767
A3A1C1	10-18	200JMSX500
A3A1C1	10-18	MA22130J
A3A1C10	10-3	471KMSX200
A3A1C11	10-8	471KMSX200
A3A1C12	10-6	CK05BX104K
A3A1C13	10-72	471KMSX200
A3A1C14	10-62	101KMSX500
A3A1C14	10-62	471KMSX200
A3A1C15	10-57	471KMSX200
A3A1C16	10-35	471KMSX200
A3A1C17	10-34	471KMSX200
A3A1C18	10-33	471KMSX200
A3A1C19	10-32	471KMSX200
A3A1C2	10-13	200JMSX500
A3A1C2	10-13	518-024A2-5-9PF
A3A1C20	10-31	471KMSX200
A3A1C21	10-30	471KMSX200
A3A1C22	10-29	471KMSX200
A3A1C23	10-39	471KMSX200
A3A1C24	10-40	101KMSX500
A3A1C25	10-86	471KMSX200
A3A1C28	10-77	518-024A2-5-9PF
A3A1C28	10-77	5202
A3A1C29	10-62A	2R2CMSX500
A3A1C29	10-62A	4R3CMSX500
A3A1C3	10-16	471KMSX200
A3A1C4	10-10	CK05BX104K
A3A1C5	10-20	471KMSX200
A3A1C6	10-70	471KMSX200
A3A1C7	10-26	471KMSX200
A3A1C8	10-68	471KMSX200
A3A1C9	10-28	CK05BX104K
A3A1FL1	10-80	FL38GW1ED3-0001
A3A1FL2	10-82	FL38GW1ED3-0001
A3A1J1	10-79	52-045-0000
A3A1J2	10-85	52-052-0000
A3A1J3	10-78	52-045-0000
A3A1L1	10-24	VK20020-4B
A3A1L2	10-71	VK20020-4B
A3A1L3	10-7	VK20020-4B
A3A1L4	10-61	VK20020-4B
A3A1M1	10-64	M6E
A3A1M1	10-64	SRA1W
A3A1M1	10-64	M6E
A3A1P1	10-88	629-9776-004
A3A1Q1	10-19	SRF2263XRF525
A3A1Q2	10-5	SRF2263XRF525
A3A1R1	10-37	SC9017T2-16-7-OHM
A3A1R10	10-11	RCR05G511JS
A3A1R11	10-23	RCR05G121JS
A3A1R11	10-23	RCR05G151JS
A3A1R12	10-69	RCR05G200JS
A3A1R13	10-9	RCR05G100JS
A3A1R14	10-2	RW69V151
A3A1R15	10-76	RCR05G151JS
A3A1R16	10-73	RCR05G360JS
A3A1R17	10-74	RCR05G151JS
A3A1R2	10-38	SC9017T2-16-7-OHM
A3A1R21	10-75	SC9017T2-50-OHM
A3A1R22	10-66	RCR05G151JS
A3A1R23	10-67	RCR05G360JS
A3A1R24	10-65	RCR05G151JS
A3A1R25	10-63	RCR05G101JS
A3A1R25	10-63	RCR05G201JS
A3A1R25	10-63	RCR05G221JS
A3A1R25	10-63	RCR05G241JS
A3A1R25	10-63	RCR05G271JS

REFERENCE DESIGNATION INDEX

REFERENCE DESIGNATION	FIG-ITEM	PART NUMBER
A3A1R25	10-63	RCR05G301JS
A3A1R25	10-63	RCR05G331JS
A3A1R25	10-63	RCR05G361JS
A3A1R25	10-63	RCR05G391JS
A3A1R25	10-63	RCR05G431JS
A3A1R25	10-63	RCR05G471JS
A3A1R25	10-63	RCR05G511JS
A3A1R25	10-63	RCR05G561JS
A3A1R25	10-63	RCR05G621JS
A3A1R25	10-63	RCR05G681JS
A3A1R25	10-63	RCR05G751JS
A3A1R25	10-63	RCR05G821JS
A3A1R25	10-63	RCR05G911JS
A3A1R25	10-63	RCR05G102JS
A3A1R25	10-63	RCR05G112JS
A3A1R25	10-63	RCR05G132JS
A3A1R25	10-63	RCR05G162JS
A3A1R25	10-63	RCR05G202JS
A3A1R25	10-63	RCR05G242JS
A3A1R25	10-63	RCR05G302JS
A3A1R25	10-63	RCR05G362JS
A3A1R25	10-63	RCR05G432JS
A3A1R25	10-63	RCR05G512JS
A3A1R26	10-60	SC9017T2-50-OHM
A3A1R27	10-55	RCR05G223JS
A3A1R28	10-53	RCR05G183JS
A3A1R28	10-53	RCR05G223JS
A3A1R29	10-51	RCR05G113JS
A3A1R29	10-51	RCR05G223JS
A3A1R3	10-36	SC9017T2-16-7-OHM
A3A1R30	10-49	RCR05G362JS
A3A1R30	10-49	RCR05G223JS
A3A1R31	10-47	RCR05G362JS
A3A1R31	10-47	RCR05G223JS
A3A1R32	10-45	RCR05G113JS
A3A1R32	10-45	RCR05G223JS
A3A1R33	10-43	RCR05G183JS
A3A1R33	10-43	RCR05G223JS
A3A1R34	10-41	RCR05G223JS
A3A1R35	10-59	RCR05G510JS
A3A1R36	10-25	RCR05G121JS
A3A1R37	10-61A	RCR05G510JS
A3A1R4	10-22	RCR05G510JS
A3A1R5	10-21	RCR05G121JS
A3A1R6	10-27	RCR05G200JS
A3A1R7	10-14	RCR05G150JS
A3A1R7	10-14	RCR05G100JS
A3A1R8	10-15	RCR05G150JS
A3A1R9	10-12	RW69V221
A3A2	9-4	601-4915-002
A3A2	11-	601-4915-002
A3A2CR1	11-126	1N645
A3A2CR2	11-125	1N645
A3A2CR3	11-138	1N645
A3A2C1	11-32	DM5E200D100WV
A3A2C10	11-44	CY30C105M
A3A2C11	11-121	DM5E200D100WV
A3A2C12	11-146	DM15F511J300WV4CR
A3A2C13	11-119	DM15F511J300WV4CR
A3A2C14	11-122	DM5E510J050WV
A3A2C15	11-120	CY30C105M
A3A2C16	11-144	CY30C105M
A3A2C17	11-40A	DM5E330J050WV
A3A2C17	11-141	CK06BX104K
A3A2C18	11-140	CY30C105M
A3A2C19	11-143	CY30C105M
A3A2C2	11-33	DM5E510J050WV
A3A2C20	11-172	CK05BX103K
A3A2C21	11-14	CK06BX104K
A3A2C22	11-17	CY30C105M
A3A2C23	11-13	CY30C105M
A3A2C24	11-69	CY30C105M
A3A2C25	11-71	DM5F151J050WV
A3A2C26	11-77	DM5F151J050WV
A3A2C27	11-86	DM5F151J050WV
A3A2C28	11-80	CY30C105M
A3A2C29	11-85	CY30C105M
A3A2C3	11-145	CY30C105M
A3A2C30	11-21	DM5F151J050WV
A3A2C31	11-24	CY30C105M
A3A2C32	11-22	CY30C105M
A3A2C33	11-159	LP88A1A105J
A3A2C34	11-157	DM5E510J050WV
A3A2C35	11-30	LP88A1A565J
A3A2C36	11-154	CY30C105M
A3A2C37	11-156	CY30C105M
A3A2C38	11-102	LP88A1A394G
A3A2C39	11-106	LP88A1A104G
A3A2C4	11-37	CY30C105M
A3A2C40	11-111	DM5C100D300WV
A3A2C41	11-113	CY30C105M
A3A2C42	11-150	CY30C105M
A3A2C43	11-110	DM5C100D300WV
A3A2C44	11-118	CY30C105M
A3A2C45	11-168	CY30C105M
A3A2C46	11-165	CY30C105M
A3A2C47	11-16	CY30C105M
A3A2C48	11-78	CY30C105M
A3A2C49	11-160	CY30C105M
A3A2C50	11-161	CY30C105M
A3A2C51	11-163	DM5C100D300WV
A3A2C52	11-116	CY30C105M
A3A2C53	11-42	DM5C050D300WV
A3A2C53	11-42	DM5C100D300WV
A3A2C54	11-54	DM5C050D300WV
A3A2C55	11-34	DM5C050D300WV
A3A2C56	11-29	DM5E510J050WV
A3A2C57	11-131A	DM5E510J050WV
A3A2C57	11-131A	DM5F101J050WV
A3A2C58	11-145A	DM5C050D300WV
A3A2C6	11-58	CY30C105M
A3A2C7	11-57	CY30C105M
A3A2C9	11-51	CY30C105M
A3A2J1	11-129	DCM27W2FB
A3A2L1	11-98	MS75089-6
A3A2Q1	11-45	2N2222A
A3A2Q2	11-137	2N2222A
A3A2Q3	11-47	2N2222A
A3A2Q4	11-136	2N2222A
A3A2R1	11-2	RT24C2X103
A3A2R1	11-2	64X203
A3A2R10	11-147	RN55E1002B
A3A2R11	11-148	RN55D1503F

REFERENCE DESIGNATION INDEX

REFERENCE DESIGNATION	FIG-ITEM	PART NUMBER
A3A2R12	11-149	RN55D6651F
A3A2R13	11-124	RN55D5111F
A3A2R14	11-39	RN55D1002F
A3A2R14	11-39	RN55D4531F
A3A2R14	11-39	RN55D6191F
A3A2R14	11-39	RN55D1002F
A3A2R14	11-39	RN55D1402F
A3A2R15	11-43	RN55D2003F
A3A2R16	11-50	RN55D9311F
A3A2R17	11-132	RN55D1403F
A3A2R18	11-49	RN55D2551F
A3A2R18	11-49	RN55D2151F
A3A2R19	11-133	RN55D1782F
A3A2R2	11-3	RT24C2X103
A3A2R20	11-48	RN55D3241F
A3A2R21	11-134	RN55D1302F
A3A2R22	11-46	RN55D3831F
A3A2R23	11-135	RN55D9311F
A3A2R26	11-167	RCR07G104KS
A3A2R27	11-166	RCR07G104KS
A3A2R28	11-12	RN55E1102B
A3A2R28	11-12	RN55E1402B
A3A2R29	11-11	RN55E1172B
A3A2R3	11-4	RT24C2X103
A3A2R30	11-65	RN55D1002F
A3A2R31	11-10	RN55E5971B
A3A2R32	11-63	RN55D3832F
A3A2R32	11-63	RN55D2742F
A3A2R33	11-9	RN55E1912B
A3A2R33	11-9	RN55E2552B
A3A2R34	11-55	RCR07G822KS
A3A2R35	11-8	RN55E4022B
A3A2R35	11-8	RN55E4642B
A3A2R36	11-38	RN55D1002F
A3A2R37	11-20	RN55E2002B
A3A2R38	11-158	RN55E1581B
A3A2R38	11-158	RN55E2211B
A3A2R38	11-158	RN55E2321B
A3A2R39	11-28	RN55D3013F
A3A2R4	11-5	RT24C2X103
A3A2R40	11-66	RN55D3013F
A3A2R41	11-26	RCR07G103KS
A3A2R42	11-153	RN55E1002B
A3A2R43	11-27	RCR07G102JS
A3A2R44	11-72	RN55D1002F
A3A2R45	11-70	RCR07G102JS
A3A2R46	11-74	RN55D1002F
A3A2R47	11-76	RN55D1002F
A3A2R48	11-73	RN55D5111F
A3A2R49	11-90	RN55E2052B
A3A2R49	11-90	RN55E5621B
A3A2R5	11-6	RT24C2X103
A3A2R50	11-87	RN55E1002B
A3A2R50	11-87	RN55E2321B
A3A2R51	11-36	RN55D90R9F
A3A2R52	11-89	RN55E1052B
A3A2R52	11-89	RN55E2551B
A3A2R54	11-88	RN55E9311B
A3A2R54	11-88	RN55E2001B
A3A2R55	11-31	RN55D1102F
A3A2R56	11-83	RCR07G103KS
A3A2R57	11-82	RCR07G104KS
A3A2R58	11-81	RCR07G104KS
A3A2R6	11-92	RT24C2X103
A3A2R60	11-91	RN55D1003F
A3A2R61	11-79	RN55D1003F
A3A2R62	11-25	RCR07G473KS
A3A2R63	11-107	RN55E1003B
A3A2R64	11-103	RN55D1133F
A3A2R65	11-104	RN55D1133F
A3A2R66	11-105	RN55D5622F
A3A2R67	11-109	RN55D4992F
A3A2R68	11-108	RN55D1003F
A3A2R69	11-117	RCR07G333KS
A3A2R7	11-93	RT24C2X103
A3A2R70	11-170	RCR07G103KS
A3A2R71	11-169	RCR07G103KS
A3A2R72	11-99	RCR07G103KS
A3A2R73	11-100	RCR07G103KS
A3A2R74	11-7	RN55D5111F
A3A2R75	11-18	RN55D4992F
A3A2R76	11-164	RN55D1503F
A3A2R77	11-19	RN55D2551F
A3A2R78	11-62	RCR07G822KS
A3A2R79	11-152	RN55E1003B
A3A2R8	11-94	RT24C2X103
A3A2R80	11-53	RN55E1001B
A3A2R81	11-40	RN55D9090F
A3A2R82	11-140A	RWR81S1001FR
A3A2R83	11-146A	RN55D2003F
A3A2R9	11-56	RN55D2742F
A3A2TP1	11-97	105-1101-001
A3A2TP2	11-96	105-1101-001
A3A2TP3	11-95	105-1101-001
A3A2TP4	11-59	105-1101-001
A3A2TP5	11-60	105-1101-001
A3A2U1	11-84	LM108AH
A3A2U10	11-155	HA2-2625-5
A3A2U11	11-35	HA2-2625-5
A3A2U12	11-142	LM218H
A3A2U12	11-142	LM118H
A3A2U12	11-142	HA2-2625-5
A3A2U13	11-171	F4052PC
A3A2U14	11-162	LM101AH
A3A2U15	11-151	LM101AH
A3A2U16	11-123	HA2-2625-5
A3A2U17	11-131	1558H
A3A2U18	11-112	LM101AH
A3A2U2	11-75	LM108AH
A3A2U3	11-68	LM108AH
A3A2U4	11-1	F4052PC
A3A2U5	11-23	LM108AH
A3A2U6	11-67	LM299H
A3A2U7	11-61	LM218H
A3A2U8	11-52	LM218H
A3A2U9	11-15	LM218H
A3A2VR1	11-41	1N753A
A3A2VR1	11-41	1N4736A
A3A2W1	11-127	629-9758-001
A3A2W2	11-114	629-9758-002
A3A3	9-3	601-5261-001
A3A3	12-	601-5261-001
A3A3C1	12-32	CY30C105M
A3A3C10	12-51	CY30C105M
A3A3C11	12-22	471KMSX200
A3A3C12	12-23	471KMSX200

REFERENCE DESIGNATION INDEX

REFERENCE DESIGNATION	FIG-ITEM	PART NUMBER
A3A3C13	12-27	471KMSX200
A3A3C14	12-26	471KMSX200
A3A3C15	12-47	DM5F331J050WV
A3A3C2	12-18	CY30C105M
A3A3C3	12-17	CY30C105M
A3A3C4	12-42	CY30C105M
A3A3C5	12-12	CY30C105M
A3A3C6	12-7	CY30C105M
A3A3C7	12-5	CY30C105M
A3A3C8	12-57	CY30C105M
A3A3C9	12-1	CY30C105M
A3A3J2	12-75	52-053-0000
A3A3J4	12-73	DDU50PB
A3A3P1	12-78	51-311-3850
A3A3Q1	12-58	2N2222A
A3A3R1	12-50	RCR07G102KS
A3A3R10	12-9	RCR07G102KS
A3A3R11	12-13	RCR07G102KS
A3A3R12	12-21	RCR05G510JS
A3A3R13	12-31	RCR05G511JS
A3A3R2	12-30	RCR07G102KS
A3A3R3	12-10	RCR07G102KS
A3A3R4	12-61	RCR07G102KS
A3A3R5	12-60	RCR07G102KS
A3A3R6	12-20	RCR05G561JS
A3A3R7	12-39	RCR07G102JS
A3A3R8	12-59	RCR07G103KS
A3A3R9	12-3	RCR07G102KS
A3A3TP1	12-71	105-1101-001
A3A3TP2	12-70	105-1101-001
A3A3TP3	12-69	105-1101-001
A3A3TP4	12-68	105-1101-001
A3A3TP5	12-67	105-1101-001
A3A3TP6	12-66	105-1101-001
A3A3TP7	12-65	105-1101-001
A3A3TP8	12-64	105-1101-001
A3A3U1	12-63	SN74LS90N
A3A3U10	12-53	SN74LS138N
A3A3U11	12-6	SN74LS74AN
A3A3U12	12-49	N74LS00N
A3A3U13	12-48	SN74LS138N
A3A3U14	12-8	SN74LS174N
A3A3U15	12-46	DM74LS02N
A3A3U16	12-45	SN74LS90N
A3A3U17	12-11	SN74LS74AN
A3A3U18	12-44	SN74LS90N
A3A3U19	12-43	N8T97N
A3A3U2	12-72	DM5407J
A3A3U20	12-14	SN74LS74AN
A3A3U21	12-41	SN74LS90N
A3A3U22	12-40	N8T97N
A3A3U23	12-15	SN74LS174N
A3A3U24	12-38	SN74LS90N
A3A3U25	12-37	N8T97N
A3A3U26	12-16	SN7406N
A3A3U27	12-36	SN74LS90N
A3A3U28	12-35	N8T97N
A3A3U3	12-56	SN7406N
A3A3U30	12-34	SN74LS90N
A3A3U31	12-33	N8T97N
A3A3U33	12-28	DM74S112N
A3A3U34	12-24	11C90DC
A3A3U34	12-24	11C90DC
A3A3U35	12-29	DM74S112N
A3A3U36	12-25	SN74S00N
A3A3U4	12-62	SN74LS90N
A3A3U5	12-2	SN74LS174N
A3A3U6	12-54	SN74LS90N
A3A3U7	12-55	SN74LS90N
A3A3U8	12-4	SN74LS174N
A3A3U9	12-52	SN74LS74AN
A3A3W3	12-77	629-9758-003
A4	1-7	629-9760-001
A4	13-	629-9760-001
A4A1	13-27	635-8516-001
A4A1	14-	635-8516-001
A4A1A1	14-30	637-2720-001
A4A1A1	15-	637-2720-001
A4A1A1CR1	15-81	MV1401
A4A1A1CR2	15-80	MV1401
A4A1A1CR3	15-10	MV1401
A4A1A1C1	15-76	CK05BX103K
A4A1A1C10	15-11	CK06BX104K
A4A1A1C11	15-92	DM5F151J050WV
A4A1A1C12	15-153	CK05BX102K
A4A1A1C13	15-150	CK05BX102K
A4A1A1C14	15-144	CK05BX102K
A4A1A1C15	15-157	CK05BX102K
A4A1A1C16	15-155	CK05BX102K
A4A1A1C17	15-148	CK05BX102K
A4A1A1C18	15-145	CK05BX102K
A4A1A1C19	15-139	CK05BX102K
A4A1A1C2	15-77	CK05BX103K
A4A1A1C20	15-106	CK05BX102K
A4A1A1C21	15-105	CK05BX102K
A4A1A1C22	15-162	CK05BX102K
A4A1A1C23	15-161	CK05BX102K
A4A1A1C24	15-99	CK05BX102K
A4A1A1C25	15-107	M39003-01-2304
A4A1A1C26	15-68	CK05BX102K
A4A1A1C27	15-14	CK05BX102K
A4A1A1C28	15-65	CK05BX102K
A4A1A1C29	15-17	CK05BX102K
A4A1A1C3	15-84	DM5F301J050WV
A4A1A1C30	15-19	DM5E510J050WV
A4A1A1C31	15-20	CK06BX104K
A4A1A1C32	15-59	CK05BX102K
A4A1A1C33	15-56	CK06BX104K
A4A1A1C34	15-25	CK05BX471K
A4A1A1C35	15-27	CK05BX471K
A4A1A1C36	15-24	CK05BX471K
A4A1A1C37	15-137	CK05BX471K
A4A1A1C38	15-114	CK05BX471K
A4A1A1C39	15-132	DM5E330J050WV
A4A1A1C4	15-73	CK05BX103K
A4A1A1C40	15-118	DM5E300J050WV
A4A1A1C41	15-122	CK05BX471K
A4A1A1C42	15-54	M39003-01-2312
A4A1A1C43	15-50	CK05BX102K
A4A1A1C44	15-26	M39003-01-2289
A4A1A1C45	15-28	M39003-01-2304
A4A1A1C46	15-49	CK06BX104K
A4A1A1C47	15-48	M39003-01-2306
A4A1A1C48	15-47	M39003-01-2306
A4A1A1C49	15-45	CK06BX104K
A4A1A1C5	15-85	DM5F301J050WV

REFERENCE DESIGNATION INDEX

REFERENCE DESIGNATION	FIG-ITEM	PART NUMBER
A4A1A1C50	15-32	M39003-01-2254
A4A1A1C51	15-127	CK05BX102K
A4A1A1C52	15-123	M39003-01-2274
A4A1A1C53	15-124	M39003-01-2312
A4A1A1C54	15-109	CK05BX102K
A4A1A1C55	15-110	CK05BX102K
A4A1A1C56	15-5	CK05BX102K
A4A1A1C57	15-147	CK05BX102K
A4A1A1C58	15-142	DM5F101J050WV
A4A1A1C59	15-141	DM5F101J050WV
A4A1A1C6	15-86	CK05BX102K
A4A1A1C7	15-90	CK05BX103K
A4A1A1C8	15-2	CK05BX102K
A4A1A1C9	15-4	DM5E510J050WV
A4A1A1L1	15-112	MS75084-07
A4A1A1L3	15-121	MS75083-03
A4A1A1L4	15-131	618-7342-007
A4A1A1Q1	15-83	2N918
A4A1A1Q10	15-22	2N918
A4A1A1Q11	15-33	2N2907A
A4A1A1Q12	15-37	2N3879
A4A1A1Q13	15-116	2N918
A4A1A1Q14	15-119	2N918
A4A1A1Q2	15-93	2N2369A
A4A1A1Q3	15-91	2N2369A
A4A1A1Q4	15-103	2N2369A
A4A1A1Q5	15-43	2N2222A
A4A1A1Q6	15-44	2N2907A
A4A1A1Q7	15-42	2N2222A
A4A1A1Q8	15-41	2N3879
A4A1A1Q9	15-55	2N2222A
A4A1A1R1	15-87	RCR05G662JS
A4A1A1R10	15-78	RCR05G104JS
A4A1A1R11	15-12	RCR05G432JS
A4A1A1R12	15-71	RCR05G104JS
A4A1A1R13	15-8	RCR05G103KS
A4A1A1R14	15-7	RCR05G103KS
A4A1A1R15	15-3	RCR05G222KS
A4A1A1R16	15-140	RCR07G681KS
A4A1A1R17	15-146	RCR05G102KS
A4A1A1R18	15-152	RCR07G102JS
A4A1A1R19	15-159	RCR07G102JS
A4A1A1R2	15-88	RCR05G132JS
A4A1A1R20	15-160	RCR07G332JS
A4A1A1R21	15-100	RN55D4640F
A4A1A1R22	15-101	RN55D4421F
A4A1A1R23	15-102	RN55D2051F
A4A1A1R24	15-104	RCR05G102KS
A4A1A1R25	15-69	RCR05G102KS
A4A1A1R26	15-13	RCR05G102KS
A4A1A1R27	15-64	RCR05G102KS
A4A1A1R28	15-18	RCR05G102KS
A4A1A1R29	15-62	RCR05G391JS
A4A1A1R3	15-89	RCR05G222KS
A4A1A1R30	15-63	RCR05G221JS
A4A1A1R31	15-21	RCR05G331KS
A4A1A1R32	15-58	RCR05G102KS
A4A1A1R33	15-57	RCR05G102KS
A4A1A1R34	15-136	RCR05G431JS
A4A1A1R35	15-133	RCR05G120JS
A4A1A1R36	15-135	RCR05G431JS
A4A1A1R37	15-134	RCR07G511JS
A4A1A1R38	15-115	RCR07G331JS
A4A1A1R39	15-117	RCR05G201JS
A4A1A1R4	15-94	RCR05G103KS
A4A1A1R40	15-130	RCR07G331JS
A4A1A1R41	15-129	RCR07G221KS
A4A1A1R42	15-120	RCR05G510JS
A4A1A1R43	15-53	RCR07G681KS
A4A1A1R44	15-51	RCR07G151KS
A4A1A1R45	15-46	RCR07G151KS
A4A1A1R46	15-52	RCR07G271KS
A4A1A1R47	15-40	RW70U1R96F
A4A1A1R47	15-40	RW70U1R33F
A4A1A1R48	15-36	RCR07G103KS
A4A1A1R49	15-35	RW70U5620F
A4A1A1R5	15-95	RCR05G103KS
A4A1A1R50	15-39	RN55D2871F
A4A1A1R51	15-34	RT22C2P501
A4A1A1R52	15-29	RN55D2261F
A4A1A1R53	15-30	RN55D3321F
A4A1A1R54	15-31	RW70U1R47F
A4A1A1R55	15-128	RCR07G152JS
A4A1A1R56	15-126	RCR07G271KS
A4A1A1R57	15-6	RCR05G102KS
A4A1A1R58	15-79	RCR05G104JS
A4A1A1R59	15-1	RCR05G331KS
A4A1A1R60	15-113	RCR07G910JS
A4A1A1R7	15-74	RN55D4642F
A4A1A1R7	15-74	RN55D4872F
A4A1A1R7	15-74	RN55D5112F
A4A1A1R7	15-74	RN55D5362F
A4A1A1R7	15-74	RN55D5622F
A4A1A1R7	15-74	RN55D5902F
A4A1A1R7	15-74	RN55D6192F
A4A1A1R7	15-74	RN55D6492F
A4A1A1R7	15-74	RN55D6812F
A4A1A1R7	15-74	RN55D7152F
A4A1A1R7	15-74	RN55D7502F
A4A1A1R7	15-74	RN55D7872F
A4A1A1R7	15-74	RN55D8252F
A4A1A1R7	15-74	RN55D8662F
A4A1A1R7	15-74	RN55D9092F
A4A1A1R7	15-74	RN55D9532F
A4A1A1R7	15-74	RN55D1003F
A4A1A1R7	15-74	RN55D1053F
A4A1A1R7	15-74	RN55D1103F
A4A1A1R8	15-75	RN55D1003F
A4A1A1R9	15-72	RCR05G104JS
A4A1A1U1	15-154	SN54LS93J
A4A1A1U10	15-108	DM74LS02N
A4A1A1U11	15-111	N74LS08N
A4A1A1U12	15-70	SN74LS190N
A4A1A1U13	15-15	SN74LS191N
A4A1A1U14	15-67	SN74LS190N
A4A1A1U15	15-66	MC12014P
A4A1A1U16	15-16	SN74LS190N
A4A1A1U17	15-61	SN74LS191N
A4A1A1U18	15-60	SN54S74J
A4A1A1U19	15-23	11C90DC
A4A1A1U19	15-23	11C90DC
A4A1A1U2	15-158	SN74LS90N
A4A1A1U20	15-125	RM723T
A4A1A1U21	15-149	SN74LS73AN
A4A1A1U3	15-96	N74LS00N
A4A1A1U4	15-151	N74LS00N

REFERENCE DESIGNATION INDEX

REFERENCE DESIGNATION	FIG-ITEM	PART NUMBER
A4A1A1U5	15-156	N74LS00N
A4A1A1U6	15-97	SN54LS93J
A4A1A1U7	15-98	SN54LS93J
A4A1A1U8	15-143	SN74LS74AN
A4A1A1U9	15-138	SN74LS74AN
A4A1A1VR1	15-9	JAN1N963B
A4A1A1VR2	15-38	1N754A
A4A1A1Y1	15-82	289-7261-020
A4A1CR4	14-3	1N4007
A4A1FL1	14-4	FL38GW1ED3-0001
A4A1FL10	14-24	FL38GW1ED3-0001
A4A1FL11	14-13	FL38GW1ED3-0001
A4A1FL12	14-23	FL38GW1ED3-0001
A4A1FL13	14-14	FL38GW1ED3-0001
A4A1FL14	14-15	FL38GW1ED3-0001
A4A1FL15	14-22	FL38GW1ED3-0001
A4A1FL16	14-16	FL38GW1ED3-0001
A4A1FL17	14-21	FL38GW1ED3-0001
A4A1FL18	14-17	FL38GW1ED3-0001
A4A1FL19	14-18	FL38GW1ED3-0001
A4A1FL2	14-5	FL38GW1ED3-0001
A4A1FL20	14-19	FL38GW1ED3-0001
A4A1FL21	14-20	FL38GW1ED3-0001
A4A1FL3	14-6	FL38GW1ED3-0001
A4A1FL4	14-7	FL38GW1ED3-0001
A4A1FL5	14-8	FL38GW1ED3-0001
A4A1FL6	14-9	FL38GW1ED3-0001
A4A1FL7	14-10	FL38GW1ED3-0001
A4A1FL8	14-11	FL38GW1ED3-0001
A4A1FL9	14-12	FL38GW1ED3-0001
A4A1P1	14-1	DCNF27W2S
A4A1P3	14-25	M39012-67-0003
A4A2	13-18	637-2718-001
A4A2	13-18	634-9681-001
A4A2	16-	637-2718-001
A4A2	25-	634-9681-001
A4A2CR1	16-28	1N4454GE
A4A2CR1	25-12	1N4454GE
A4A2C1	16-21	CK05BX102K
A4A2C1	25-22	518-024A5-25PF
A4A2C10	16-35	471KMSX200
A4A2C10	25-13	518-024A2-5-9PF
A4A2C11	16-3	471KMSX200
A4A2C11	25-36	518-024A2-5-9PF
A4A2C12	16-4	518-024A3-5-20PF
A4A2C12	25-8	CK05BX102K
A4A2C13	16-36	471KMSX200
A4A2C13	25-6	CK05BX102K
A4A2C14	16-39	518-024A3-5-20PF
A4A2C14	25-10	CK05BX102K
A4A2C15	25-9	CK05BX102K
A4A2C16	25-42	471KMSX200
A4A2C17	25-43	471KMSX200
A4A2C18	25-2	471KMSX200
A4A2C19	25-52	471KMSX200
A4A2C2	16-17	471KMSX200
A4A2C2	25-23	518-024A2-5-9PF
A4A2C3	16-13	471KMSX200
A4A2C3	25-29	471KMSX200
A4A2C4	16-24	518-024A5-25PF
A4A2C5	16-27	CK05BX102K
A4A2C5	25-34	471KMSX200
A4A2C6	16-26	CK05BX102K
A4A2C6	25-18	471KMSX200
A4A2C7	16-12	CK05BX102K
A4A2C7	25-25	471KMSX200
A4A2C8	16-8	CK05BX102K
A4A2C8	25-16	471KMSX200
A4A2C9	16-10	471KMSX200
A4A2C9	25-33	CK05BX103K
A4A2L1	16-20	MS75084-08
A4A2L1	25-24	VK20020-4B
A4A2L2	16-15	623-0740-002
A4A2L2	25-30	MS75087-3
A4A2L3	16-7	623-0741-001
A4A2L3	25-14	634-9728-003
A4A2L4	25-35	634-9737-001
A4A2L5	25-37	634-9728-002
A4A2L6	25-49	634-9728-002
A4A2L7	25-1	VK20020-4B
A4A2P2	25-46	52-312-9040
A4A2Q1	16-22	SRF2263XRF525
A4A2Q1	25-19	LT3005
A4A2Q2	16-9	2N2907A
A4A2Q2	25-7	2N2907A
A4A2Q3	16-38	2N5109
A4A2Q3	25-53	LT3005
A4A2R1	16-37	RCR05G241JS
A4A2R1	25-21	RCR05G101JS
A4A2R10	16-30	RN55D3161F
A4A2R10	25-11	RN55D7870F
A4A2R11	16-6	RCR05G301JS
A4A2R11	25-4	RN55D3161F
A4A2R12	16-31	RCR05G301JS
A4A2R12	25-39	RCR05G151JS
A4A2R13	16-5	RCR05G180JS
A4A2R13	25-40	RCR05G360JS
A4A2R14	16-32	RW70U2210F
A4A2R14	25-41	RCR05G151JS
A4A2R15	16-33	RN55D1651F
A4A2R15	25-38	RCR05G102JS
A4A2R16	16-34	RN55D6810F
A4A2R16	25-45	RCR05G181JS
A4A2R17	16-1	RCR07G510JS
A4A2R17	16-1	RCR07G101JS
A4A2R17	25-44	RCR05G110JS
A4A2R18	16-25A	RCR05G150JS
A4A2R18	25-3	RCR05G110JS
A4A2R19	25-51	RCR05G221JS
A4A2R2	16-19	RCR05G431JS
A4A2R2	25-20	RCR05G100JS
A4A2R20	25-50	RCR05G240JS
A4A2R21	25-48	RCR05G221JS
A4A2R3	16-18	RCR05G120JS
A4A2R3	25-28	RN55D1001F
A4A2R4	16-16	RCR05G431JS
A4A2R4	25-27	RN55D3090F
A4A2R5	16-14	RN55D2490F
A4A2R5	16-14	RN5504120F
A4A2R5	25-17	RCR07G680JS
A4A2R6	16-23	RW70U2210F
A4A2R6	16-23	RW70U63R4F
A4A2R6	25-26	RCR07G680JS
A4A2R7	16-25	RCR05G100JS
A4A2R7	25-15	RCR05G181JS
A4A2R8	16-11	RCR07G102JS

REFERENCE DESIGNATION INDEX

REFERENCE DESIGNATION	FIG-ITEM	PART NUMBER
A4A2R8	25-32	RCR07G100JS
A4A2R9	16-29	RN55D5111F
A4A2R9	16-29	RN55D1071F
A4A2R9	25-5	RWR81S39R0FR
A4A2T1	16-2	635-8680-001
A4A3	13-16	635-8517-001
A4A4	13-4	MC386X2-002W
A4C1	13-8	CK06BX474K
A4C15	13-17	DM5E300J050WV
A4C2	13-10	M39003-01-2312
A4C3	13-9	M39003-01-2312
A4C4	13-3	CK06BX104K
A4C5	13-2	CK06BX104K
A4FL1	13-26	M15733-52-0003
A4FL2	13-23	M15733-52-0003
A4FL3	13-24	M15733-52-0003
A4FL4	13-25	M15733-52-0003
A4FL5	13-14	AFF700
A4L1	13-5	MS75089-11
A4L2	13-19	MS75083-13
A4P2	13-21	52-312-9040
A4R1	13-12	RN55D4221F
A4R18	13-15	RCR05G430JS
A4R18	13-15	RCR05G620JS
A4R2	13-13	RN55D7870F
A4R3	13-11	RN55D---1F
A4R4	13-6	RN55D---1F
A4R5	13-7	RN55D---1F
A4R6	13-20	RCR07G241JS
A5	1-5	629-9770-002
A5	17-	629-9770-002
A5A1	17-5	629-9889-002
A5A1	18-	629-9889-002
A5A1CR1	18-7	SA2518
A5A1CR2	18-5	SA2518
A5A1CR3	18-3	1N1192
A5A1CR4	18-1	1N1192
A5A1CR5	18-2	1N1202A
A5A1CR6	18-12	1N1202A
A5A1C1	18-10	M39018-03-0732
A5A1C2	18-11	M39018-03-0741
A5A1F1	18-9	F02A32V20AS
A5A1F2	18-19	FM04-125V-1-2A
A5A1F3	18-20	FM04-125V-1-2A
A5A1J1	18-8	1625-6R
A5A1R1	18-6	RCR20G103KS
A5A1R2	18-4	RCR20G103KS
A5A1TB1	18-16	4-140
A5A2	17-35	601-5221-001
A5A2	19-	601-5221-001
A5A2CR1	19-25	MCR649AP2
A5A2C1	19-46	CK06BX104K
A5A2C10	19-28	CK06BX104K
A5A2C11	19-34	CK05BX471K
A5A2C12	19-13	M39003-01-2304
A5A2C13	19-16	M39003-01-2356
A5A2C14	19-22	CK06BX104K
A5A2C15	19-20	CK06BX224K
A5A2C16	19-19	CK06BX104K
A5A2C17	19-17	CK06BX224K
A5A2C18	19-14	CK06BX104K
A5A2C2	19-48	CK05BX471K
A5A2C3	19-44	CK06BX104K
A5A2C4	19-40	CK06BX104K
A5A2C5	19-43	M39003-01-2295
A5A2C6	19-37	M39003-01-2265
A5A2C7	19-38	M39003-01-2265
A5A2C8	19-31	CK06BX104K
A5A2C9	19-27	CK06BX104K
A5A2J1	19-51	372-2624-018
A5A2Q1	19-30	2N2222A
A5A2Q4	19-24	2N3767
A5A2R1	19-56	RT22C2P102
A5A2R10	19-2	RW67V1R0
A5A2R11	19-3	RW67VR13
A5A2R12	19-4	RW67V1R0
A5A2R13	19-5	RW67VR13
A5A2R14	19-6	RW67V1R0
A5A2R15	19-7	RW67V1R0
A5A2R16	19-29	RCR07G102KS
A5A2R17	19-8	RW67V1R0
A5A2R18	19-35	RN55D7151F
A5A2R19	19-36	RN55D1871F
A5A2R2	19-55	RT22C2P501
A5A2R20	19-9	RW67V1R0
A5A2R21	19-26	RW69V1R0
A5A2R22	19-10	RW67V1R0
A5A2R23	19-11	RW67V1R0
A5A2R24	19-23	RW67V6R8
A5A2R25	19-12	RW67V1R0
A5A2R3	19-41	RCR07G271KS
A5A2R4	19-42	RN55D2151F
A5A2R5	19-45	RN55D7500F
A5A2R6	19-50	RN55D4021F
A5A2R7	19-49	RN55D7150F
A5A2R8	19-39	RCR07G681KS
A5A2R9	19-1	RW67VR13
A5A2TP1	19-54	M39024-11-01
A5A2TP2	19-53	M39024-11-01
A5A2U1	19-47	RM723T
A5A2U2	19-32	RM723T
A5A2U3	19-21	7815UC
A5A2U4	19-18	7824UC
A5A2U5	19-15	LM320T15
A5A3	17-19	629-9950-001
A5A3	20-	629-9950-001
A5A3Q1	20-6	66801
A5A3Q2	20-7	66801
A5A4	17-16	629-9951-001
A5A4	20-	629-9951-001
A5A4Q1	20-6	66801
A5A4Q2	20-7	66801
A5A4R1	20-3	RCR07G561KS
A5A4VR1	20-4	1N753A
A5A4VR2	20-5	1N753A
A5B1	17-33	028021
A5C1	17-10	602D528A1
A5C2	17-14	3110CC453V025
A5C3	17-15	3110CC453V025
A5C4	17-28	CK62AW472M
A5C5	17-27	CK62AW472M
A5C6	17-24	CK62AW472M
A5C7	17-25	CK62AW472M
A5F1	17-17	F02A250V4AS
A5J4	17-26	EAC301
A5L1	17-20	VK20020-4B

REFERENCE DESIGNATION INDEX

REFERENCE DESIGNATION	FIG-ITEM	PART NUMBER
A5L2	17-23	VK20020-4B
A5R1	17-11	RCR42G102KS
A5R2	17-13	RCR42G471KS
A5T1	17-4	42525
A5XF1	17-18	HKPH
A6	1-8	629-9780-002
A6	24-	629-9780-002
A6AT1	24-10	PA588
A6J1	24-5	1625-9R
A7	24-15	601-5938-001
A8	1-4	601-5681-001
A8	21-	601-5681-001
A8CR1	21-45	1N4454GE
A8C1	21-43	M39003-01-2286
A8C10	21-22	CK06BX104K
A8C2	21-42	M39003-01-2286
A8C3	21-41	M39003-01-2286
A8C4	21-39	CK06BX104K
A8C5	21-46	CK06BX104K
A8C6	21-5	CK06BX104K
A8C7	21-9	CK06BX104K
A8C8	21-13	CK06BX104K
A8C9	21-19	CK06BX104K
A8P1	21-52	1017-12-1
A8K10	21-36	1017-12-1
A8K11	21-35	1017-12-1
A8K12	21-10	1017-12-1
A8K13	21-8	1017-12-1
A8K14	21-33	1017-12-1
A8K15	21-32	1017-12-1
A8K16	21-31	1017-12-1
A8K17	21-16	1017-12-1
A8K18	21-15	1017-12-1
A8K19	21-14	1017-12-1
A8K2	21-50	1017-12-1
A8K20	21-26	1017-12-1
A8K21	21-29	1017-12-1
A8K22	21-30	1017-12-1
A8K23	21-23	1017-12-1
A8K24	21-24	1017-12-1
A8K25	21-25	1017-12-1
A8K26	21-27	1017-12-1
A8K27	21-28	1017-12-1
A8K3	21-49	1017-12-1
A8K4	21-48	1017-12-1
A8K5	21-47	1017-12-1
A8K6	21-40	1017-12-1
A8K7	21-4	1017-12-1
A8K8	21-38	1017-12-1
A8K9	21-37	1017-12-1
A8P1	21-59	372-2622-074
A8R1	21-44	RCR07G103KS
A8R2	21-54	RCR05G152KS
A8R3	21-55	RCR05G470KS
A8U1	21-53	SN74LS138N
A8U10	21-17	SN7406N
A8U11	21-20	SN74LS174N
A8U12	21-21	SN7406N
A8U2	21-51	N74LS32N
A8U3	21-3	SN74LS174N
A8U4	21-2	SN7406N
A8U5	21-7	SN74LS174N
A8U6	21-6	SN7406N
A8U7	21-12	SN74LS174N
A8U8	21-11	SN7406N
A8U9	21-18	SN74LS174N
A9	1-17	601-5882-001
A9	22-	601-5882-001
A9CR1	22-17	1N645
A9CR10	22-35	LVA100A
A9CR10	22-35	1N758A
A9CR11	22-38	1N645
A9CR12	22-39	1N645
A9CR2	22-20	1N963B
A9CR3	22-78	1N4454GE
A9CR4	22-25	1N3026B
A9CR5	22-24	1N3024B
A9CR6	22-51	1N645
A9CR7	22-48	1N645
A9CR8	22-47	1N645
A9CR9	22-45	1N645
A9C1	22-29	CK06BX104K
A9C10	22-43	600D226G050KD5
A9C11	22-56	CK06BX104K
A9C12	22-59	M39003-01-2286
A9C13	22-41	M39003-01-2274
A9C14	22-73	CK06BX104K
A9C15	22-57	CK05BX471K
A9C16	22-65	CK05BX471K
A9C17	22-66	DM5F301J050WV
A9C18	22-62	DM5E330J050WV
A9C2	22-22	CK06BX104K
A9C3	22-27	CK06BX104K
A9C4	22-79	M39003-01-2286
A9C5	22-2	CK06BX104K
A9C6	22-77	CK06BX104K
A9C7	22-42	600D107F075DL5
A9C8	22-46	600D107G050DJ5
A9C9	22-63	CK05BX104K
A9P1	22-85	372-2622-074
A9Q1	22-21	2N2905A
A9Q2	22-30	2N2905A
A9Q3	22-32	2N2907A
A9Q4	22-34	2N2907A
A9R1	22-15	RT22C2F502
A9R10	22-33	RCR07G473KS
A9R11	22-40	RCR07G102KS
A9R12	22-37	RCR07G272KS
A9R13	22-36	RCR07G103KS
A9R14	22-53	RN55D1501F
A9R15	22-67	RN55E1822B
A9R16	22-64	RN55E2492B
A9R2	22-18	RCR07G102KS
A9R3	22-19	RCR07G121KS
A9R4	22-16	RCR07G470KS
A9R5	22-23	RN55D1542F
A9R6	22-75	RCR07G103KS
A9R7	22-26	RN55D1002F
A9R8	22-44	RCR20G102KS
A9R9	22-29	RCR20G103KS
A9TP1	22-13	105-1103-001
A9TP2	22-14	105-1101-001
A9U1	22-6	314A152
A9U11	22-69	N74LS04N
A9U12	22-70	SN74LS174N
A9U13	22-74	SN74LS74AN

REFERENCE DESIGNATION INDEX

REFERENCE DESIGNATION	FIG-ITEM	PART NUMBER	REFERENCE DESIGNATION	FIG-ITEM	PART NUMBER
A9U15	22-31	MC1536U			
A9U16	22-68	SN74LS174N			
A9U18	22-71	ER3401			
A9U18	22-71	ER3400			
A9U19	22-61	N8T97N			
A9U2	22-9	ER3401			
A9U2	22-9	ER3400			
A9U20	22-60	N8T97N			
A9U21	22-58	N8T97N			
A9U22	22-54	ER3401			
A9U22	22-54	ER3400			
A9U23	22-49	ER3401			
A9U23	22-49	ER3400			
A9U24	22-76	MC9602CEBJC			
A9U3	22-80	N74LS00N			
A9U4	22-3	314A152			
A9U5	22-5	N74LS20N			
A9U6	22-11	ER3401			
A9U6	22-11	ER3400			
A9U7	22-81	SN74LS74AN			
A9U8	22-4	SN74LS139N			
A9U9	22-7	ER3401			
A9U9	22-7	ER3400			
A9XU18	22-72	TSW3800-22BW			
A9XU2	22-10	TSW3800-22BW			
A9XU22	22-55	TSW3800-22BW			
A9XU23	22-50	TSW3800-22BW			
A9XU6	22-12	TSW3800-22BW			
A9XU9	22-8	TSW3800-22BW			

Collins 479S-6A VOR/ILS Signal Generator

Rockwell International

diagrams

Collins Government Avionics Division

Printed in USA

523-0769121-101118
1 September 1978
1st Revision, 15 October 1980

list of illustrations

Figure		*Page*
1	Front Panel Assembly A1, Schematic Diagram	8
2	Controller/Audio Assembly A2, Schematic Diagram	13
3	Controller/Audio Assembly A2, CPU Board Assembly A2A1, Schematic Diagram	17
4	Controller/Audio Assembly A2, Analog Board Assembly A2A2, Schematic Diagram	23
5	Controller/Audio Assembly A2, TDM Board A2A3, Schematic Diagram	27
6	RF Modulator Assembly A3, Schematic Diagram	39
7	RF Modulator Assembly A3, RF Strip Line Assembly A3A1, Schematic Diagram	43
8	RF Modulator Assembly A3, Demodulator/ALC Board Assembly A3A2, Schematic Diagram	47
9	RF Modulator Assembly A3, Counter-I/O Board Assembly A3A3, Schematic Diagram	51
10	Synthesizer Assembly A4, Schematic Diagram	57
11	Power Supply Assembly A5, Schematic Diagram	63
12	Backplane Assembly A7, Interconnect Diagram	67
13	Remote Tune Assembly A8, Schematic Diagram	71
14	Chassis Wiring Harness, Schematic Diagram	75
15	Store/Recall Assembly A9 (479S-6A CPN 622-4127-002, -003 Only), Schematic Diagram	79
16	IEEE-488/1978 Bus Interface Assembly A10 (CPN 601-5883-001) (479S-6A CPN 622-4127-003, -001 Only), Schematic Diagram	85
17	IEEE-488/1978 Bus Interface Assembly A10 (CPN 601-2309-001) (479S-6A CPN 622-4127-003, -004 Only), Schematic Diagram	89

List of Effective Pages

*The asterisk indicates pages changed, added, or deleted by the current change.

Page No	Issue
*Title	15 Oct 80
*List of Effective Pages	15 Oct 80
*1 thru 2	15 Oct 80
3	1 Sep 78
4 Blank	1 Sep 78
5	1 Sep 78
6 Blank	1 Sep 78
7	1 Sep 78
8 Blank	1 Sep 78
9	1 Sep 78
10 Blank	1 Sep 78
11	1 Sep 78
12 Blank	1 Sep 78
13	1 Sep 78
14 Blank	1 Sep 78
*15	15 Oct 80
16 Blank	1 Sep 78
17	1 Sep 78
18 Blank	1 Sep 78
19	1 Sep 78
20 Blank	1 Sep 78
*21	15 Oct 80
22 Blank	1 Sep 78
*23	15 Oct 80
24 Blank	1 Sep 78
*25	15 Oct 80
26 Blank	1 Sep 78
*27	15 Oct 80
28 Blank	1 Sep 78
29	1 Sep 78
30 Blank	1 Sep 78
31	1 Sep 78
32 Blank	1 Sep 78
33	1 Sep 78
34 Blank	1 Sep 78
35	1 Sep 78
36 Blank	1 Sep 78
*37	15 Oct 80
38 Blank	1 Sep 78
39	1 Sep 78
40 Blank	1 Sep 78
41	1 Sep 78
42 Blank	1 Sep 78
*43	15 Oct 80
44 Blank	1 Sep 78
*45	15 Oct 80
46 Blank	1 Sep 78
*47 thru 49	15 Oct 80
50 Blank	1 Sep 78
*51	15 Oct 80
52 Blank	1 Sep 78
53	1 Sep 78
54 Blank	1 Sep 78
55	1 Sep 78
56 Blank	1 Sep 78
*57	15 Oct 80
58 Blank	1 Sep 78
*59	15 Oct 80
60 Blank	1 Sep 78
*61	15 Oct 80
62 Blank	1 Sep 78
*62A Added	15 Oct 80
*62B Blank Added	15 Oct 80
*62C Added	15 Oct 80
*62D Blank Added	15 Oct 80
*63	15 Oct 80
64 Blank	1 Sep 78
*65	15 Oct 80
66 Blank	1 Sep 78
67	1 Sep 78
68 Blank	1 Sep 78
69	1 Sep 78
70 Blank	1 Sep 78
71	1 Sep 78
72 Blank	1 Sep 78
73	1 Sep 78
74 Blank	1 Sep 78
75	1 Sep 78
76 Blank	1 Sep 78
*77	15 Oct 80
78 Blank	1 Sep 78
*79	15 Oct 80
80 Blank	1 Sep 78
*81	15 Oct 80
82 Blank	1 Sep 78
83	1 Sep 78
84 Blank	1 Sep 78
*85	15 Oct 80
86 Blank	1 Sep 78
*87	15 Oct 80
88 Blank	1 Sep 78
*89 Added	15 Oct 80
*90 Blank Added	15 Oct 80
*91 Added	15 Oct 80
*92 Blank Added	15 Oct 80

Record of Revisions

RETAIN THIS RECORD IN THE FRONT OF MANUAL.
ON RECEIPT OF REVISIONS, INSERT REVISED PAGES IN THE MANUAL, AND ENTER DATE INSERTED AND INITIALS

REV NO	REVISION DATE	INSERTION DATE/BY	SB NUMBER INCLUDED	REV NO	REVISION DATE	INSERTION DATE/BY	SB NUMBER INCLUDED
1st Ed	1 Sep 78		None				
1	15 Oct 80		1 thru 10				

1. CONFIGURATION STATUS CONTROL

Collins Government Avionics Division of Rockwell International uses a 2-character maximum alphabetic identifier for identifying the configuration status of a unit or subassembly. The alphabetic identifier is preceded by the letters REV (revision) and starts with — if no changes have been processed. The first change is identified as A, the second as B, continuing through Z to AA, AB, and ultimately ZZ. The alphabetic identifier is not a serial number because many units or subassemblies may exist with the same identifier. Incorporation of design changes in a unit or subassembly that is returned to Rockwell-Collins for repair by a customer or that is removed from the company's finished goods inventory is defined as rework. At the time of rework, the unit or subassembly is re-marked to reflect the design level to which it is upgraded. This is done by leaving the original marking on the unit or subassembly and adding the letters RWK (rework), followed by the alphabetic identifier of the latest change incorporated in the rework. A reworked unit may not contain all design changes made to the reworked identifier, but does contain all changes required to make unit operation identical to a newly manufactured unit with the same identifier. For example, unit one is marked REV B — RWK F and unit two is marked REV F. This indicates that both units are at the design level of revision F. Unit one is reworked and may not look exactly the same as unit two.

Whenever possible, the alphabetic identifier is marked on the unit or subassembly approximately two spaces after the 10-digit part number. When this is not practicable, it is marked as close as possible to, but not immediately following, the part number. As an example, in a subassembly with high parts density, the 10-digit part number may appear on one side of the subassembly, the alphabetic identifier on the other.

Only alphabetic identifiers that result in schematic changes are covered in this section. If a unit or subassembly has an identifier that falls between identifiers on the schematic changes pages, the electrical configuration is represented by the earlier identifier. For example, a unit is marked REV F and falls between REV E and REV H on the schematic changes page. The electrical configuration of the unit is the same as units with REV E.

2. CONFIGURATION EFFECTIVITY

Refer to the schematic changes page preceding each subassembly schematic for any subassembly changes that may have occurred and the corresponding identifier covering each change.

Note

Configuration history before 1 September 1978 is not recorded in this section.

Listed below are the units/subassemblies with the latest identifier (change) covered by this document.

UNIT/SUBASSEMBLY	COLLINS PART NUMBER	LATEST EFFECTIVITY
A1	629-9730-002	REV G
A1A1	601-4914-002	REV H
A1A2	601-4913-002	REV E
A2	629-9740-002	REV G
A2A1	638-2470-001	REV H
A2A2	601-4911-001	REV L
A2A3	601-4883-001	REV R
A3	629-9750-002	REV G
A3A1	601-5001-001	REV P
A3A2	601-4915-002	REV Y
A3A3	601-5261-001	REV H
A4	629-9760-001	REV J
A4A1	635-8516-001	REV G
A4A2 with board 637-2718-001	637-2718-001	REV E
A4A2 with board 634-9681-001	634-9681-001	REV B
A5	629-9770-002	REV L
A5A1	629-9889-002	REV F
A5A2	601-5221-001	REV C
A5A3	629-9950-001	REV B
A5A4	629-9951-001	REV B
Wiring Harness	629-9780-002	REV K
A7	601-5938-001	REV C
A8	601-5881-001	REV D
A9	601-5882-001	REV E
A10	601-5883-001	REV F
A10	601-2309-001	REF —

3. SCHEMATIC DIAGRAMS

The schematic diagrams are shown in figures 1 through 17. A schematic changes page precedes each subassembly schematic diagram. The schematic changes page provides a description of the schematic change, the reason for the change, an identification designation, the service bulletin (if applicable) that modifies the equipment, and the production cut-in effectivity.

The digital attenuator on A6 is not considered field repairable and should be returned to the factory for repair. Schematic diagrams are provided for CPU board assembly A2A1, TDM board A2A3, and rf strip line assembly A3A1; however, it is suggested that field repair should not be attempted. A2A1, A2A3, and A3A1 should be returned to the factory for repair. A schematic is also included for vco assembly A4A3; however A4A3 is not field repairable and must be returned to the factory for repair.

SCHEMATIC CHANGES

REVISION IDENTIFICATION	DESCRIPTION OF REVISION AND REASON FOR CHANGE	SERVICE BULLETIN	EFFECTIVITY
	(This page will contain schematic revision information.)		

Front Panel Assembly A1, Schematic Diagram
Figure 1 (Sheet A)

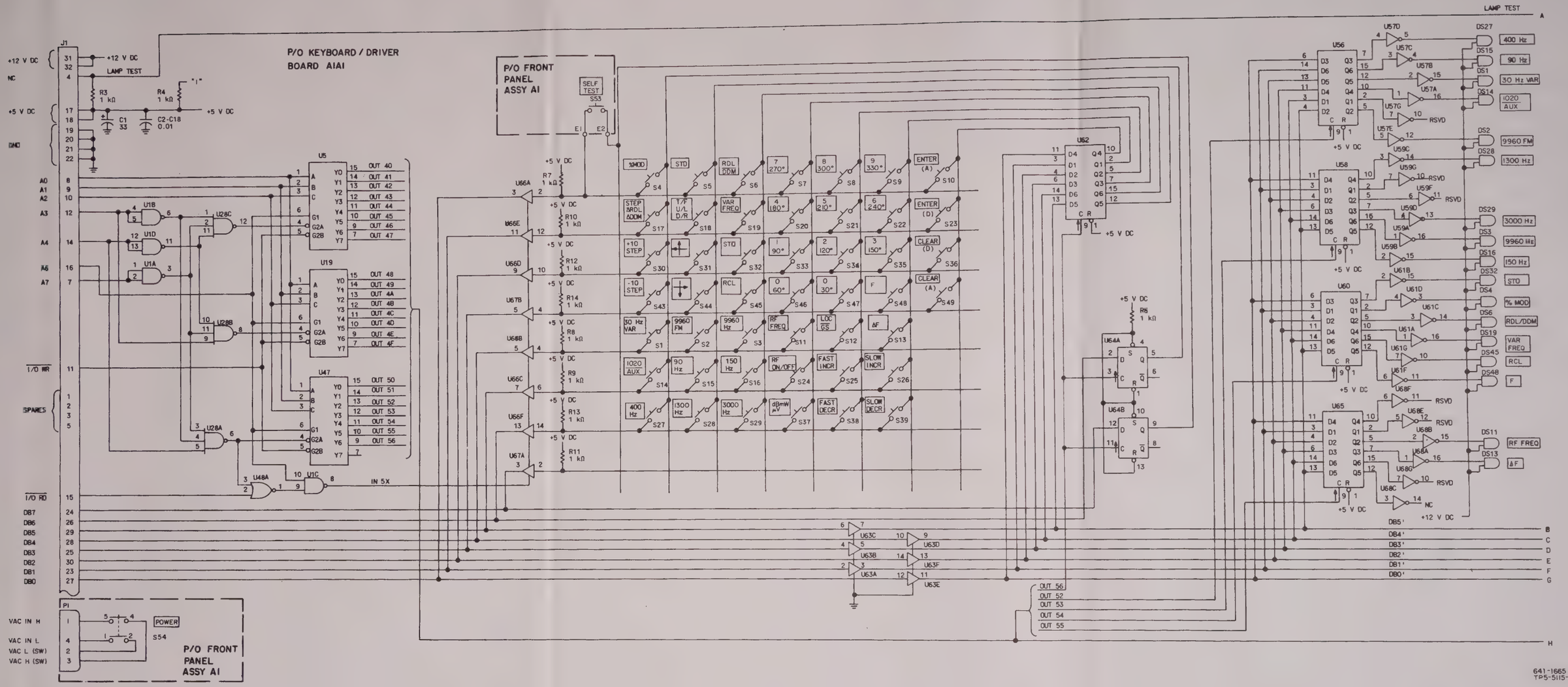

Front Panel Assembly A1, Schematic Diagram
Figure 1 (Sheet 1 of 4)

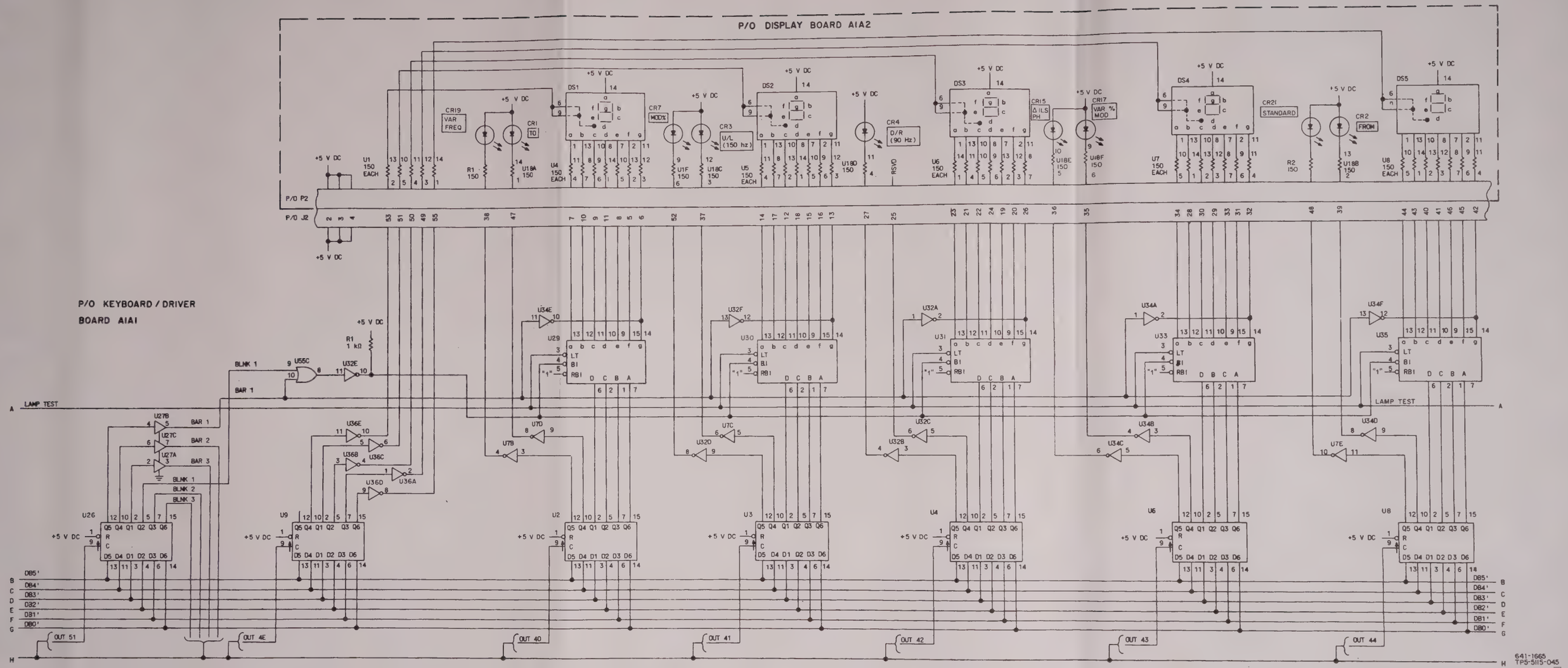

Front Panel Assembly A1, Schematic Diagram
Figure 1 (Sheet 2)

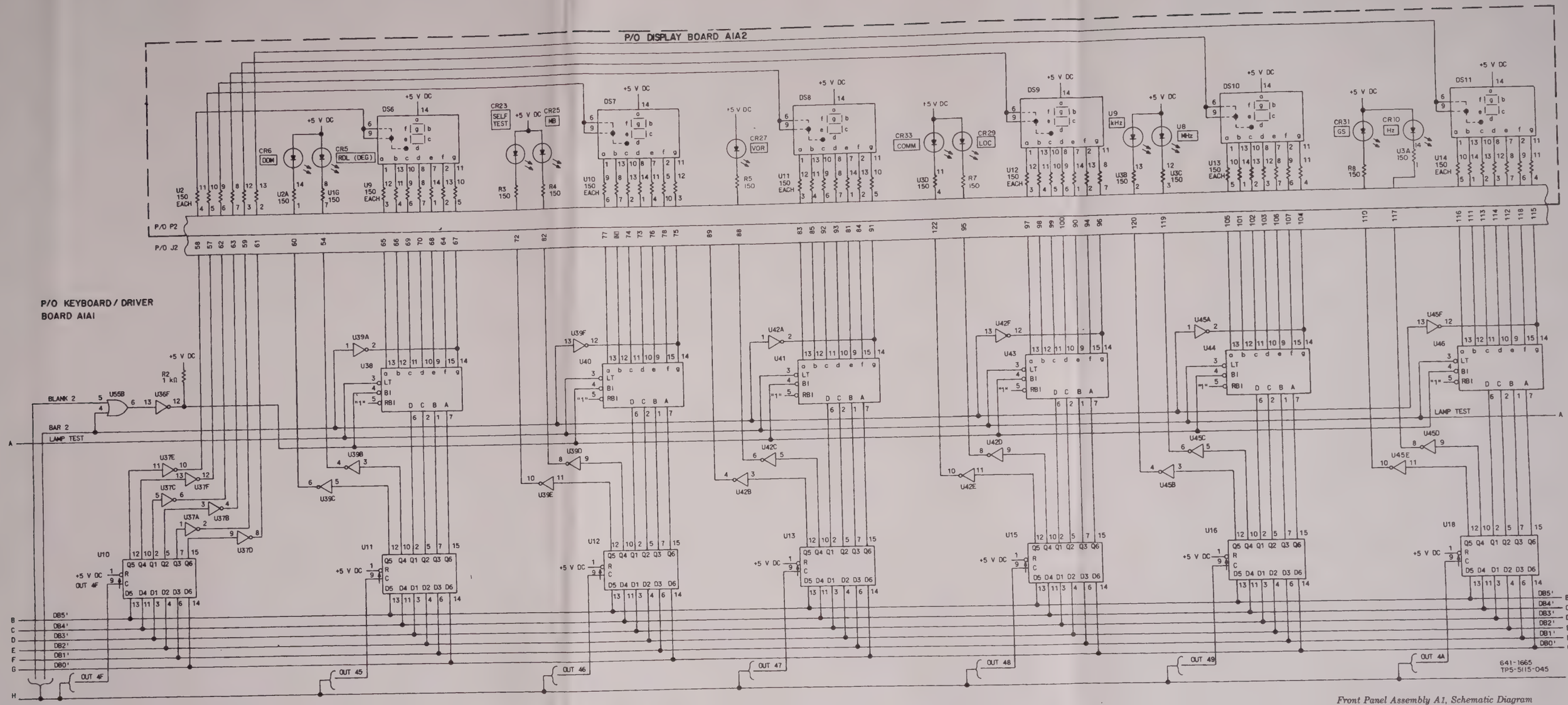

Front Panel Assembly A1, Schematic Diagram
Figure 1 (Sheet 3)

SCHEMATIC CHANGES

REVISION IDENTIFICATION	DESCRIPTION OF REVISION AND REASON FOR CHANGE	SERVICE BULLETIN	EFFECTIVITY
	(This page will contain schematic revision information.)		

Controller/Audio Assembly A2, Schematic Diagram
Figure 2 (Sheet A)

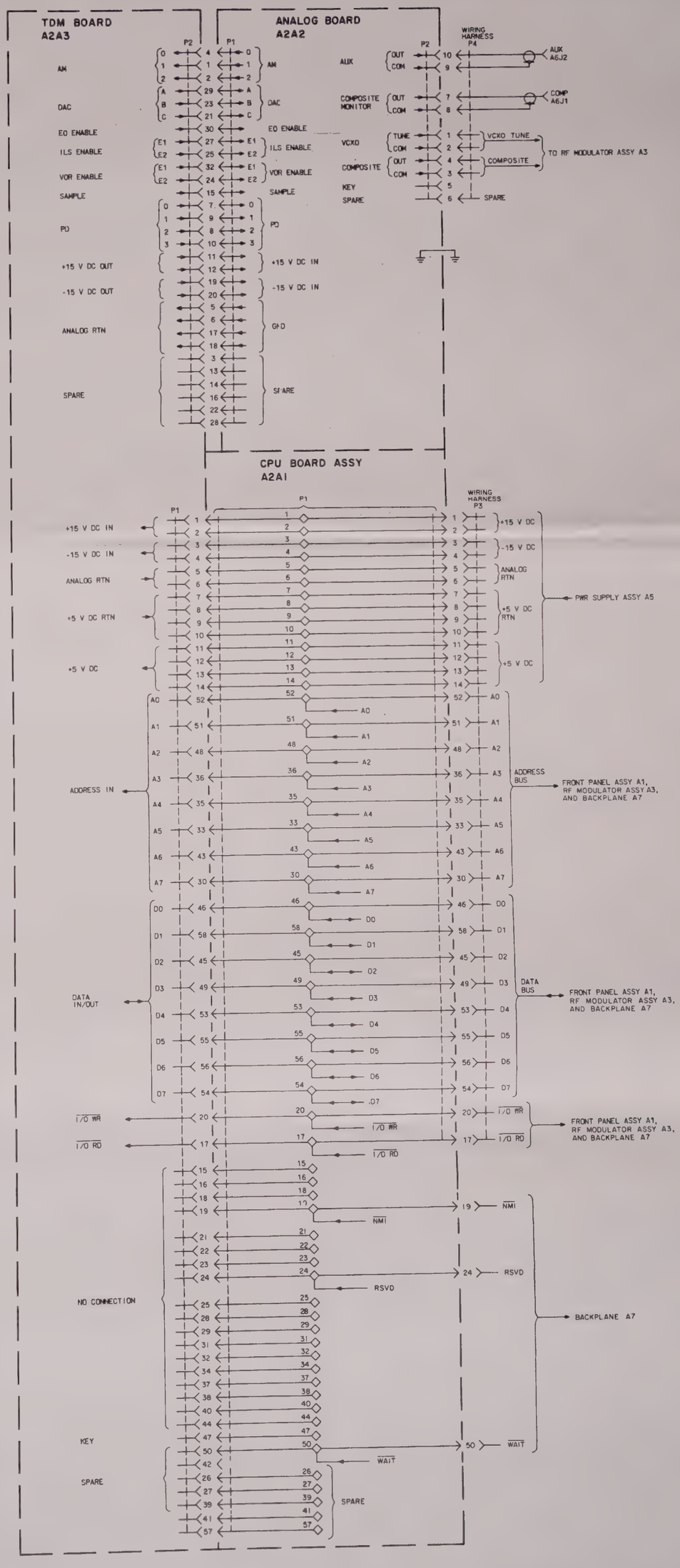

Controller/Audio Assembly A2, Schematic Diagram
Figure 2

637-8654
TPS-1612-025

SCHEMATIC CHANGES

REVISION IDENTIFICATION	DESCRIPTION OF REVISION AND REASON FOR CHANGE	SERVICE BULLETIN	EFFECTIVITY
	(This page will contain schematic revision information.)		

Controller/Audio Assembly A2, CPU Board Assembly A2A1.
Schematic Diagram
Figure 3 (Sheet A)

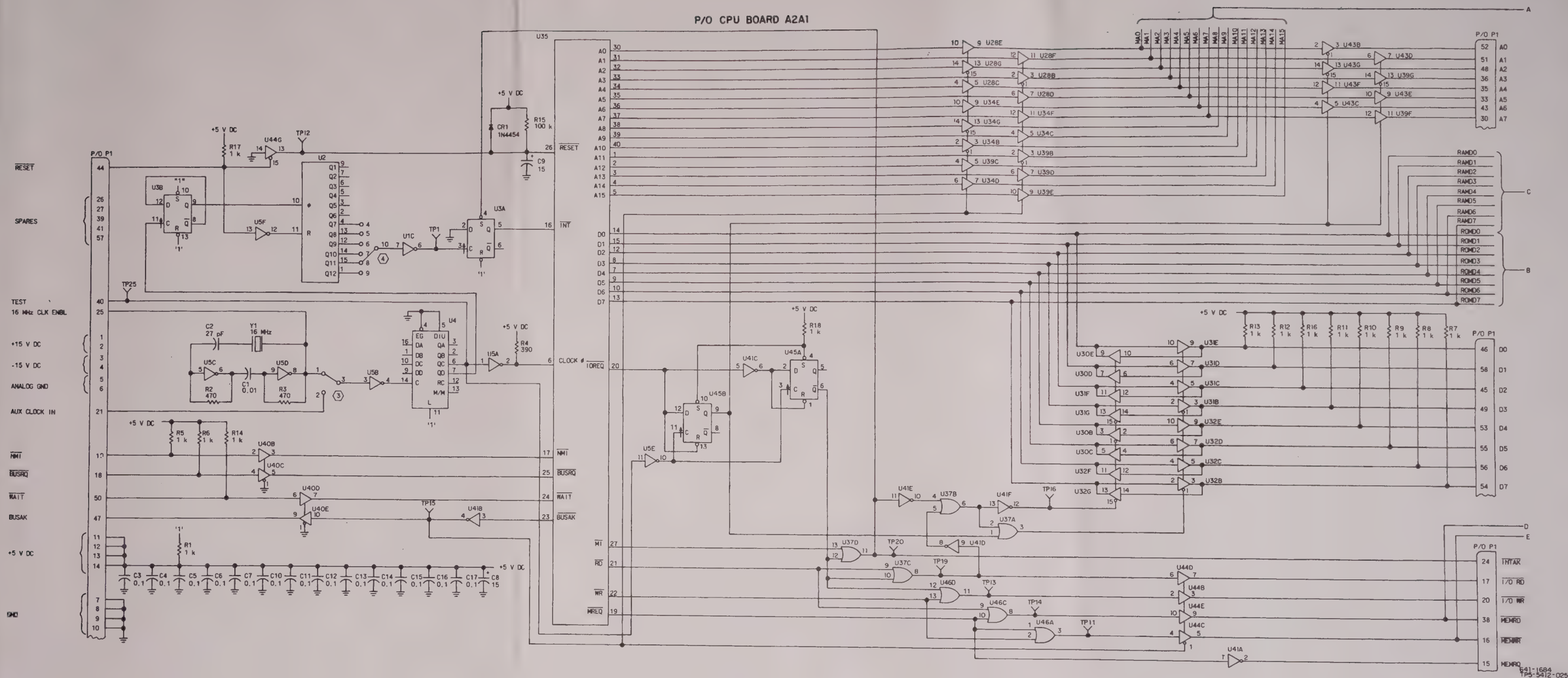

Controller/Audio Assembly A2, CPU Board Assembly A2A1, Schematic Diagram
Figure 3 (Sheet 1 of 2)

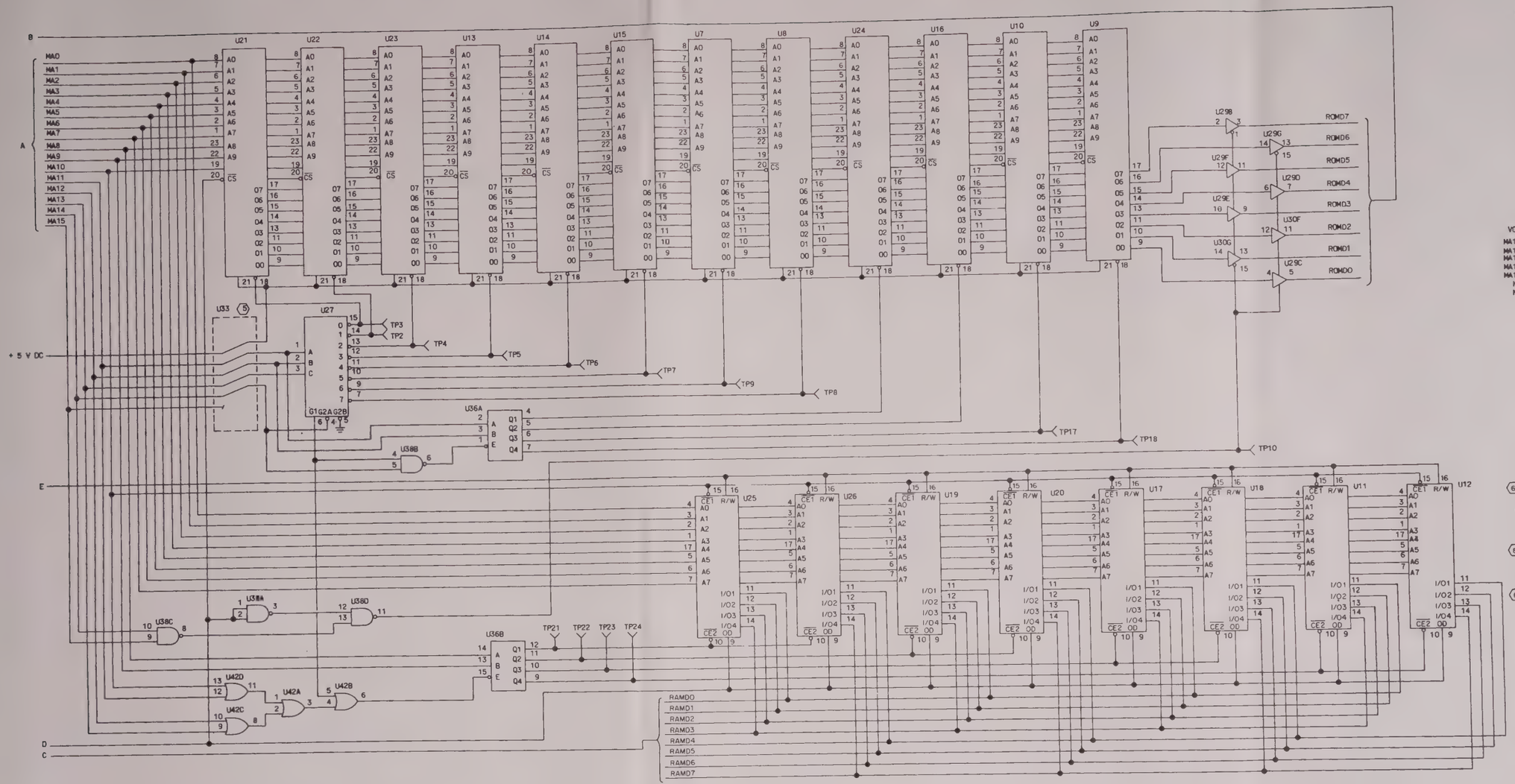

NOTES:

1. UNLESS OTHERWISE SPECIFIED, RESISTANCE VALUES ARE IN OHMS AND CAPACITANCE VALUES ARE IN MICROFARADS.
2. PARTIAL REFERENCE DESIGNATIONS ARE SHOWN; FOR COMPLETE DESIGNATION, PREFIX WITH AND/OR ASSEMBLY DESIGNATION.
3. JUMPER 1 TO 3 FOR NORMAL OPERATION. JUMPER 2 TO 3 FOR AUX CLOCK.
4. JUMPER AS FOLLOWS FOR DESIRED INTERRUPT TIME:

INTERRUPT TIME (ms)	JUMPER FROM	JUMPER TO
0.256	4	10
0.512	5	10
1.024	6	10
2.048	7	10
4.096	8	10
8.192	9	10

5. PRINTED WIRING JUMPERS AT U33 CONFIGURES THE CPU FOR 2716 2 k EPROMS. TO USE 2732 4 k EPROMS, CUT JUMPERS AND INSERT JUMPER HEADER AT U33 (STRAIGHT ACROSS JUMPERING). SEE DETAIL BELOW.

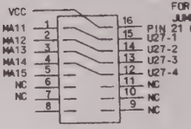

FOR 2732 EPROMS (4 k), CUT 5 PLATED JUMPERS. JUMPER 1-16, 2-15, 3-14, 4-13, 5-12.

MICROCIRCUIT 8T97

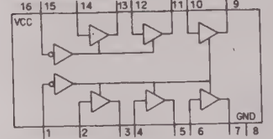

MICROCIRCUIT INFORMATION

	U NO.	TYPE	POWER (V DC) + 5	POWER (V DC) GND
6	U1	4049	1	8
	U2	4040	16	8
6	U3	74LS74	14	7
	U4	74LS191	16	8
6	U5	7404	14	7
	U6	NOT USED		
	U7-U10	2716/32	24	12
6	U11	8111-4	18	8
	U12	8111-4	18	8
	U13-U16	2716/32	24	12
6	U17-U20	8111-4	18	8
	U21-U24	2716/32	24	12
6	U25	8111-4	18	8
	U26	8111-4	18	8
	U27	74LS138	16	8
	U28-U32	8T97	16	8
	U33	N/A		
	U34	8T97	16	8
	U35	Z80	11	29
	U36	74LS139	16	8
	U37	74LS32	14	7
	U38	74LS00	14	7
	U39	8T97	16	8
	U40	8T97	16	8
	U41	74LS04	14	7
	U42	74LS32	14	7
	U43	8T97	16	8
	U44	8T97	16	8
	U45	74LS74	14	7
	U46	74LS32	14	7

6 ELECTROSTATIC SENSITIVE DEVICES OBSERVE PRECAUTIONS FOR HANDLING

641-1684
TP5-5412-025

Controller/Audio Assembly A2, CPU Board Assembly A2A1, Schematic Diagram
Figure 3 (Sheet 2)

SCHEMATIC CHANGES

REVISION IDENTIFICATION	DESCRIPTION OF REVISION AND REASON FOR CHANGE	SERVICE BULLETIN	EFFECTIVITY
A1	Changed R106 from 1400 to 787 Ω, R12 from 1 to 5 kΩ, R15 from 11.5 to 10 kΩ, R3 from 2 to 5 kΩ, R25 from 5760 to 5490 Ω, R2 from 500 to 1 kΩ, R38 from 82.5 to 78.7 kΩ, and R5 from 5 to 10 kΩ to improve adjustment ranges.		REV D
B1	Changed connection of C45 from U21-1 to ground to improve noise rejection.		REV E
B2	Changed C18 from 15 to 27 pF to eliminate oscillation in U15.		REV G
B3	Added C102 (56 pF) to prevent spurious oscillations from appearing as spurious signals on rf output.		REV G
B4	Changed C102 from 56 to 47 pF to improve frequency response at 14-kHz tone.		REV J
B5	Changed R45 from 22 to 1 kΩ to reduce output distortion.		REV K

Controller/Audio Assembly A2, Analog Board Assembly A2A2, Schematic Diagram
Figure 4 (Sheet 4)

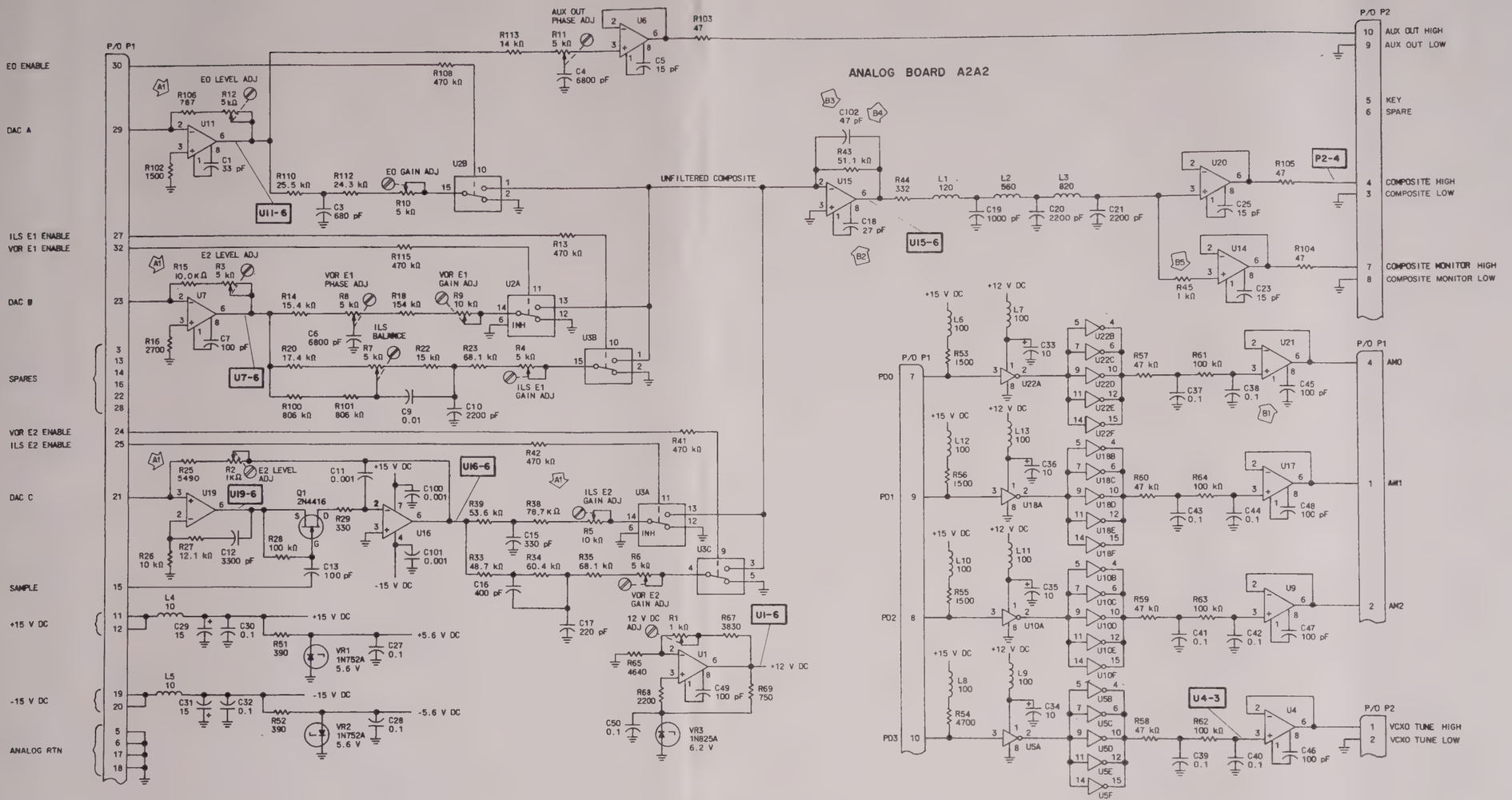

NOTES:
1. UNLESS OTHERWISE SPECIFIED, RESISTANCE VALUES ARE IN OHMS, CAPACITANCE VALUES ARE IN MICROFARADS, AND INDUCTANCE VALUES ARE IN MICROHENRYS.
2. PARTIAL REFERENCE DESIGNATIONS ARE SHOWN; FOR COMPLETE DESIGNATION, PREFIX WITH UNIT AND/OR ASSEMBLY DESIGNATION.
3. ALL DC VOLTAGES ARE NOMINAL.

POWER AND GROUND CONNECTIONS

U NO.	TYPE	POWER (V DC)				
		+15	+15	GND	+5.6	-5.6
U1	LM101A	7		4		
U2	CD4053			8	16	7
(4) U3	CD4053			8	16	7
U4	LM108	7		4		
(4) U5	CD4049	SHOWN ON SCHEMATIC				
U6	LM101A	7	4			
U7	LM101A	7	4			
U9	LM108	7		4		
(4) U10	CD4049	SHOWN ON SCHEMATIC				
U11	LM101A	7	4			
U14	LM101A	7	4			
U15	LM101A	7	4			
U16	LM318	SHOWN ON SCHEMATIC				
U17	LM108	7		4		
(4) U18	CD4049	SHOWN ON SCHEMATIC				
U19	LM318	7	4			
U20	LM101A	7	4			
U21	LM108	7		4		
(4) U22	CD4049	SHOWN ON SCHEMATIC				

(4) ELECTROSTATIC SENSITIVE DEVICES OBSERVE PRECAUTIONS FOR HANDLING

637-8598
TP5-1015-015

Controller/Audio Assembly A2, Analog Board Assembly A2A2, Schematic Diagram
Figure 4

SCHEMATIC CHANGES

REVISION IDENTIFICATION	DESCRIPTION OF REVISION AND REASON FOR CHANGE	SERVICE BULLETIN	EFFECTIVITY
A1	Added R35 (10 kΩ) and changed R3 from 10 to 33 kΩ to improve performance of 16-MHz oscillator.		REV N
A2	Disconnected U105-9/U106-10 line from U75-3/U101-4 line, and reconnected U105-9/U106-10 line to U100-12 to improve digital timing characteristics.		REV P

Controller/Audio Assembly A2, TDM Board A2A3, Schematic Diagram
Figure 5 (Sheet A)

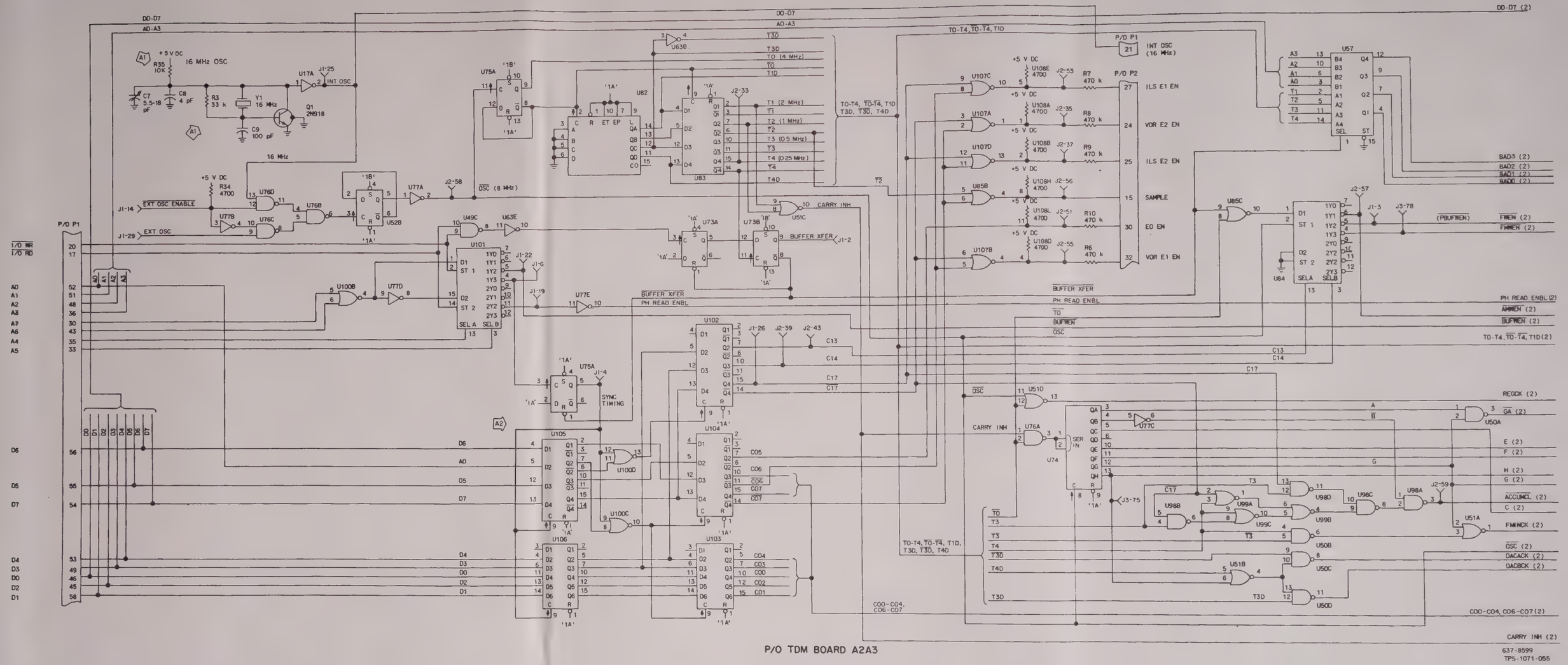

Controller/Audio Assembly A2, TDM Board A2A3,
Schematic Diagram
Figure 5 (Sheet 1 of 5)

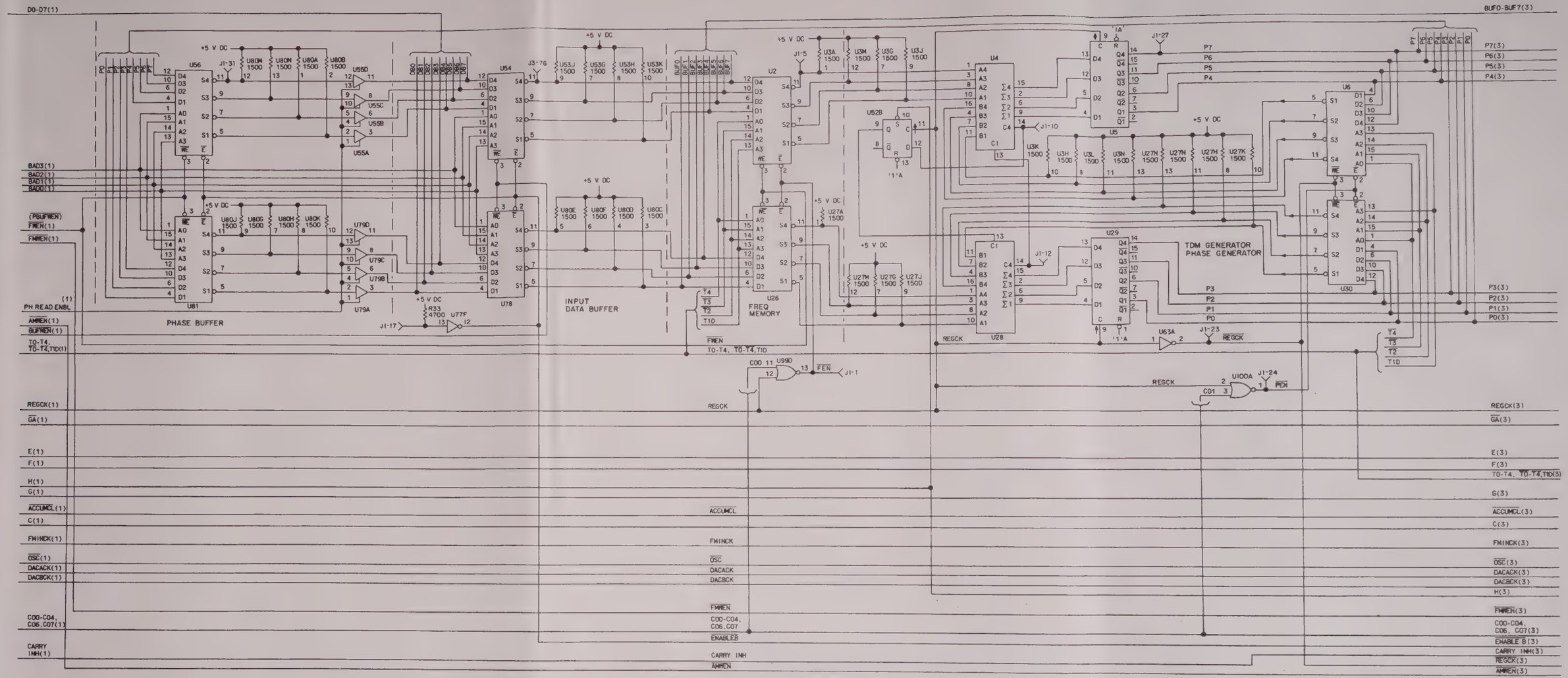

P/O TDM BOARD A2A3

637-8599
TP5-1071-055

Controller/Audio Assembly A2, TDM Board A2A3, Schematic Diagram
Figure 5 (Sheet 2)

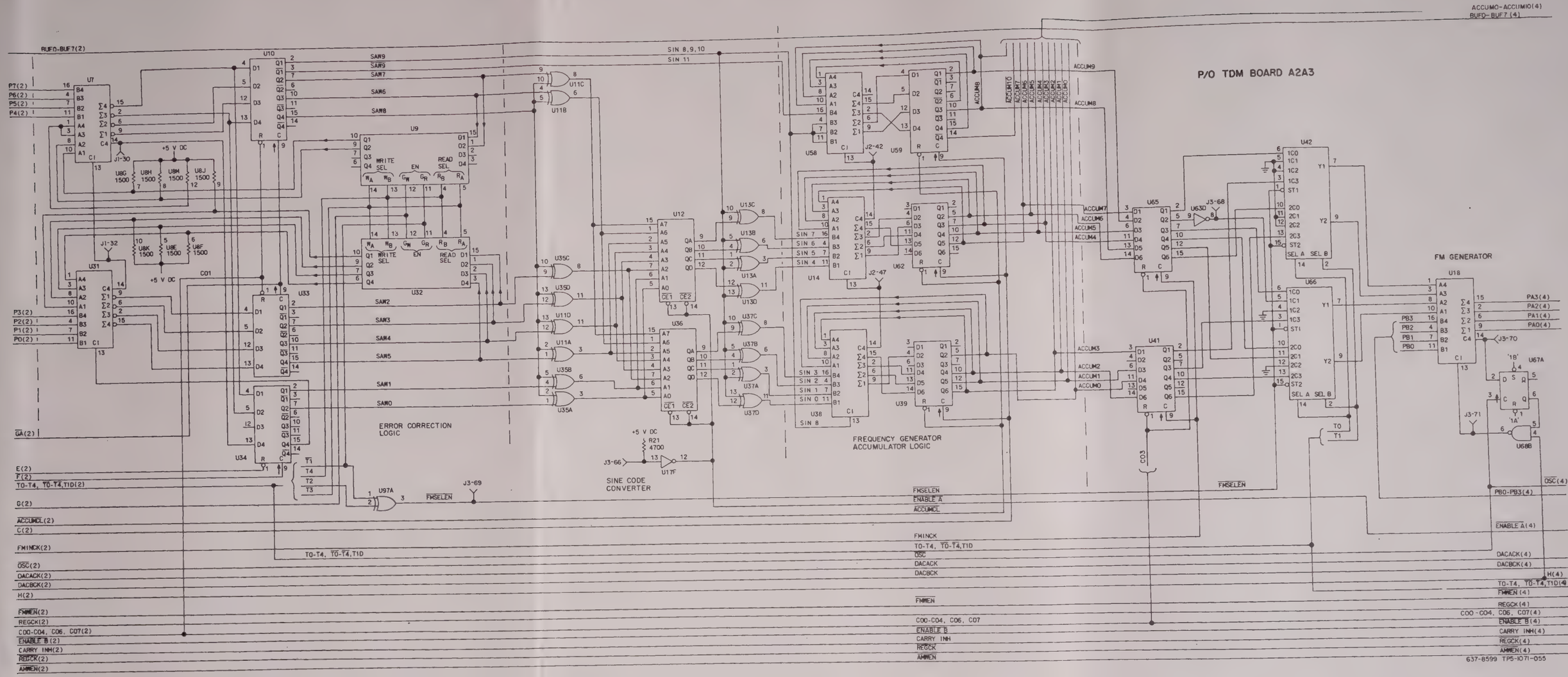

Controller/Audio Assembly A2, TDM Board A2A3, Schematic Diagram
Figure 5 (Sheet 3)

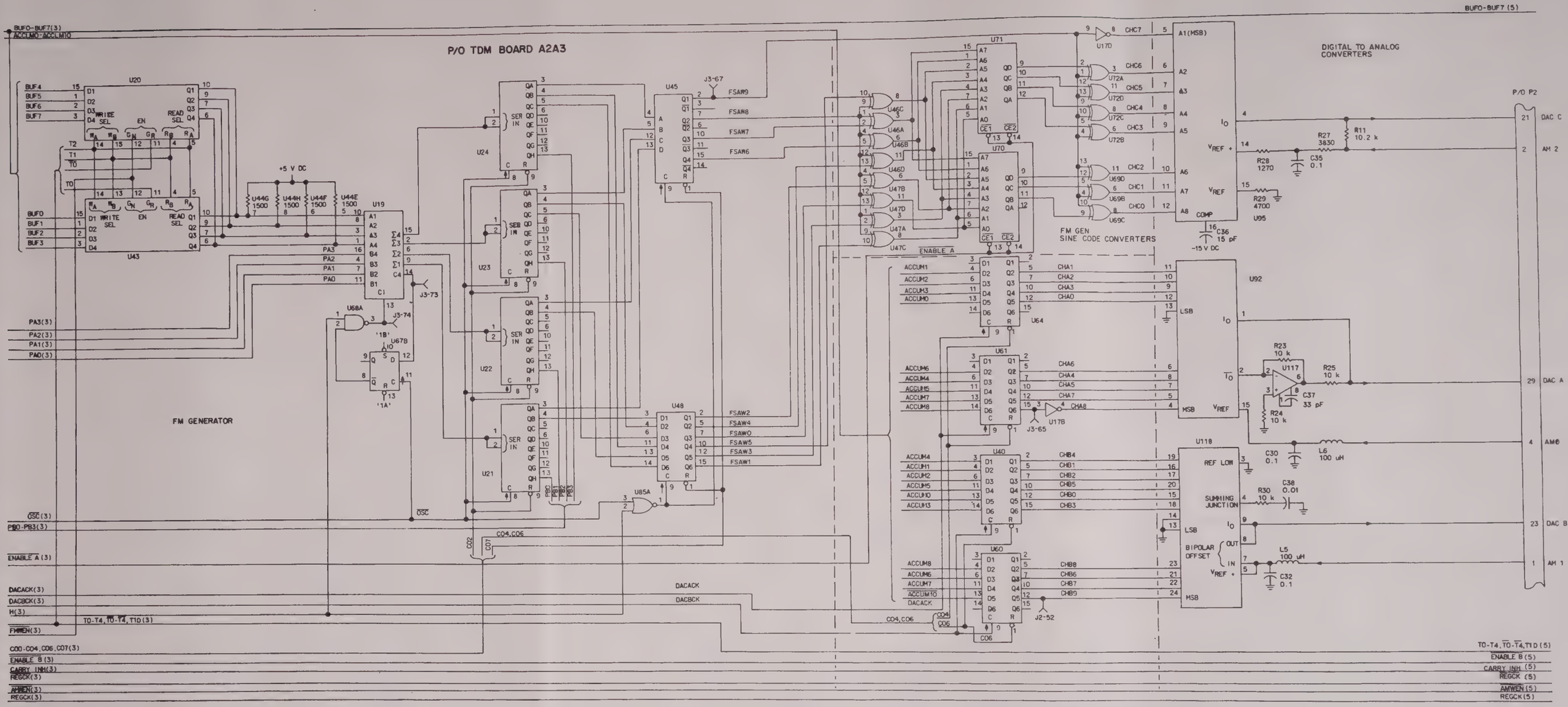

Controller/Audio Assembly A2, TDM Board A2A3, Schematic Diagram
Figure 5 (Sheet 4)

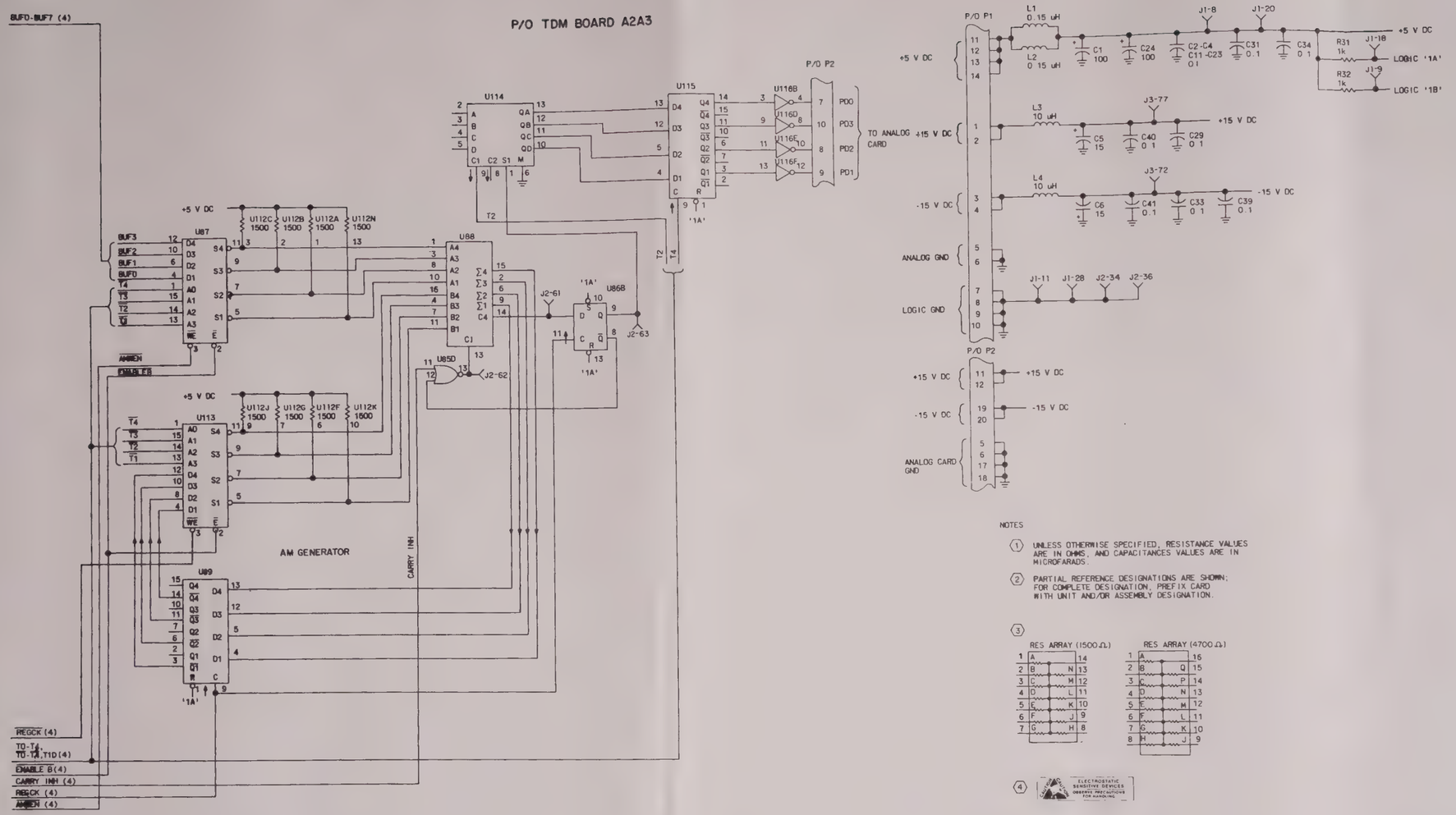

MICROCIRCUIT INFORMATION

U NO.	TYPE	POWER (V DC) +15	+5	GND	-15
U1	SPARE				
U2	7489		16	8	
U3	RES ARRAY		14		
U4	7483		5	12	
U5	74LS175		16	8	
U6	7489		16	8	
U7	7483		5	12	
U8	RES ARRAY		14		
U9	74170		16	8	
U10	74175		16	8	
U11	74LS86		14	7	
(4) U12	ROM		16	8	
U13	74LS86		14	7	
U14	7483		5	12	
U15	SPARE				
U16	SPARE				
U17	7404		14	7	
U18	7483		5	12	
U19	7483		5	12	
U20	74170		16	8	
U21	74LS164		14	7	
U22	74LS164		14	7	
U23	74LS164		14	7	
U24	74LS164		14	7	
U25	SPARE				
U26	7489		16	8	
U27	RES ARRAY		14		
U28	7483		5	12	
U29	74LS175		16	8	
U30	7489		16	8	
U31	7483		5	12	
U32	74170		16	8	
U33	74LS175		16	8	
U34	74LS175		16	8	
U35	74LS86		14	7	
U36	ROM		16	8	
U37	74LS86		14	7	
U38	7483		5	12	
U39	74LS174		16	8	
U40	74LS174		16	8	
U41	74LS174		16	8	
U42	74153		16	8	
U43	74170		16	8	
U44	RES ARRAY		14		
U45	74LS175		16	8	
U46	74LS86		14	7	
U47	74LS86		14	7	
U48	74LS174		16	8	
U49	74LS00		14	7	
U50	74LS00		14	7	
U51	74LS02		14	7	
U52	74LS74		14	7	
U53	RES ARRAY		14		
U54	7489		16	8	
U55	DM8094		14	7	
U56	7489		16	8	
U57	74157		16	8	
U58	7483		5	12	
U59	74LS175		16	8	
U60	74LS174		16	8	
U61	74LS174		16	8	
U62	74LS174		16	8	
U63	7404		14	7	
U64	74LS174		16	8	
U65	74LS174		16	8	
U66	74153		16	8	

U NO.	TYPE	POWER (V DC) +15	+5	GND	-15
U67	74LS74		14	7	
U68	74LS00		14	7	
U69	74LS86		14	7	
(4) U70	ROM		16	8	
U71	ROM		16	8	
U72	74LS86		14	7	
U73	74LS74		14	7	
U74	74LS164		16	8	
U75	74LS74		16	8	
U76	74LS00		14	7	
U77	7404		14	7	
U78	7489		16	8	
U79	DM8094		14	7	
U80	RES ARRAY				
U81	7489		16	8	
U82	74161		16	8	
U83	74175		16	8	
U84	74155		16	8	
U85	74LS02		14	7	
U86	74LS74		14	7	
U87	7489		16	8	
U88	7483		5	12	
U89	74LS175		16	8	
U90	SPARE				
U91	SPARE				
(4) U92	AD7530	14		3	
U93	SPARE				
U94	SPARE				
(4) U95	MC1408L-8		13	2	3
U96	SPARE				
U97	74LS86		14	7	
U98	74LS00		14	7	
U99	74LS02		14	7	
U100	74LS02		14	7	
U101	74155		16	8	
U102	74LS175		16	8	
U103	74LS174		16	8	
U104	74LS175		16	8	
U105	74LS175		16	8	
U106	74LS174		16	8	
U107	74LS02		14	7	
U108	RES ARRAY		16		
U109	SPARE				
U110	SPARE				
U111	SPARE				
U112	RES ARRAY		14		
U113	7489		16	8	
U114	7495		14	7	
U115	74LS175		16	8	
U116	7406		14	7	
U117	LM101A	7			4
(4) U118	AD562 KD/BIN		1	12	6

637-8599
TP5-1071-055

Controller/Audio Assembly A2, TDM Board A2A3, Schematic Diagram
Figure 5 (Sheet 5)

SCHEMATIC CHANGES

REVISION IDENTIFICATION	DESCRIPTION OF REVISION AND REASON FOR CHANGE	SERVICE BULLETIN	EFFECTIVITY
	(This page will contain schematic revision information.)		

RF Modulator Assembly A3, Schematic Diagram
Figure 6 (Sheet A)

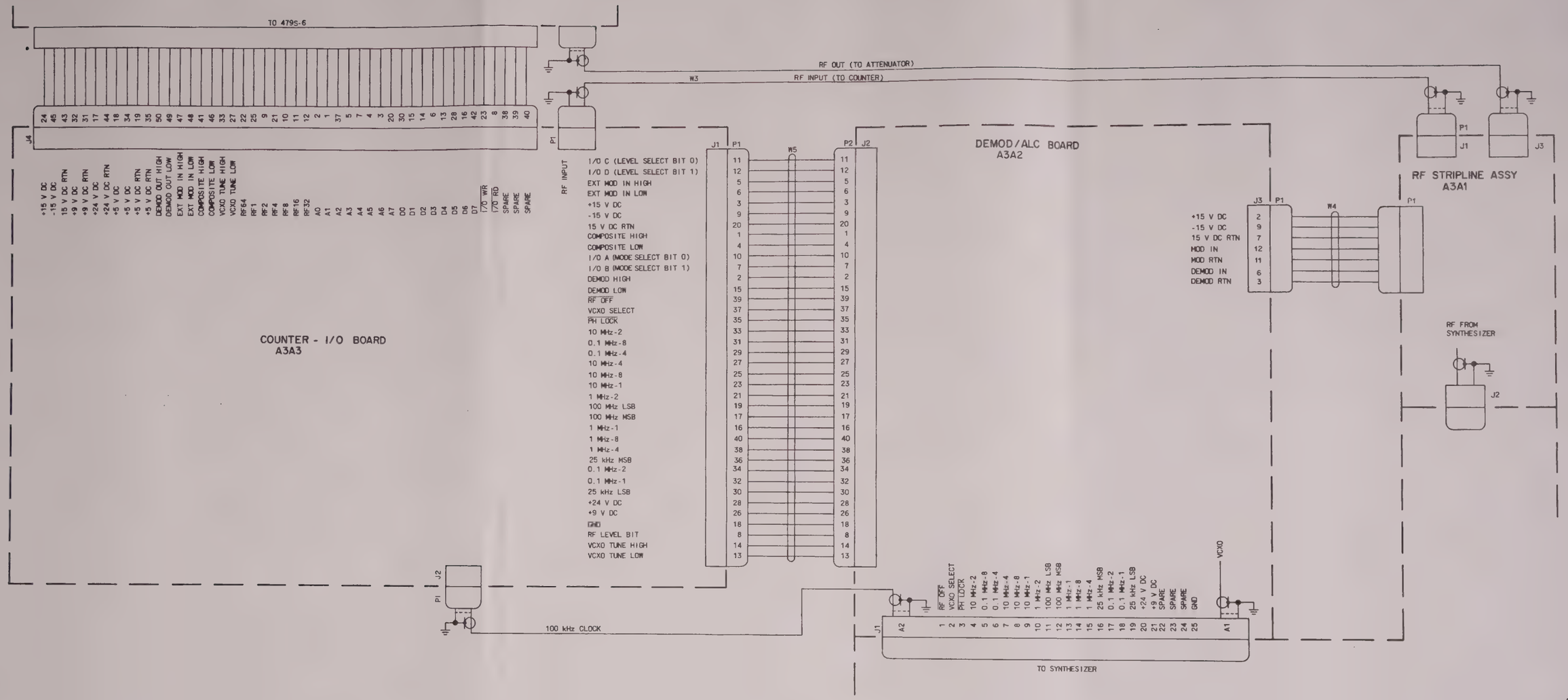

637-8597
TP5-1225-015

RF Modulator Assembly A3, Schematic Diagram
Figure 6

SCHEMATIC CHANGES

REVISION IDENTIFICATION	DESCRIPTION OF REVISION AND REASON FOR CHANGE	SERVICE BULLETIN	EFFECTIVITY
A1	Changed R5 and R36 from 100 to 120 Ω and R4 from 62 to 51 Ω to improve characteristics of rf amplifier.		REV D
A2	Deleted C26 and C27 to improve the typical frequency response of the coupler.		REV E
A3	Changed C28 from 2.5-9 to 0.8-10 pF for improved component quality.		REV F
B1	Added C29 (test select, may not be required for some units) to aid in tuning.		REV H
B2	Reversed positions of R25 and C14, added R37 (51 Ω) between U1-7 and C14, changed C14 from 100 to 470 pF, and R25 from 100 Ω to test select to increase performance margins.		REV K
B3	Changed R11 from 120 to 150 Ω, R7 from 15 to 10 Ω, C1 from 20 to 13 pF, C2 from 20 pF to variable (2.5 thru 2.9 pF) and removed R8 (15 Ω) to increase performance margins.		REV L

RF Modulator Assembly A3, RF Strip Line Assembly A3A1, Schematic Diagram
Figure 7 (Sheet A)

SCHEMATIC CHANGES

REVISION IDENTIFICATION	DESCRIPTION OF REVISION AND REASON FOR CHANGE	SERVICE BULLETIN	EFFECTIVITY
B1	Changed VR1 from 1N753A to 1N4736A to increase component availability.		REV L
B2	Changed U12 from LM218 to LM118, removed CR2, added R82 (1 kΩ), and changed R14 from 10 kΩ to 4530 Ω to improve performance and increase component availability.		REV M
B3	Changed R14 from 4530 to 6120 Ω, added C57 (51 pF), changed C17 from 0.1 uF to 33 pF, changed C17 connectors from +24 V ac to ground, removed connection of U17B-4 to J2-8, changed R81 from 90.9 Ω to 909 Ω, changed U10, U11, and U16 from AD507K to HA2625, and changed U12 from LM118 to HA2625 to improve performance of mod and demod outputs.		REV N
B4	Changed C53 from 5 to 10 pF, added C58 (100 pF), removed R82 (1 kΩ), removed CR3, changed C57 from 51 to 100 pF, removed U17B, and added R83 (200 kΩ) to increase performance over mod range.		REV P
B5	Changed R28 from 11 to 14 kΩ, R35 from 42.2 to 46.4 kΩ, R33 from 19.1 to 25.5 kΩ, R38 from 1500 to 2210 Ω, R14 from 6120 to 10 kΩ, R49 from 20.5 kΩ to 5620 Ω, R54 from 9310 to 2 kΩ, R52 from 10.5 kΩ to 2550 Ω, R50 from 10 kΩ to 2320 Ω to improve performance.		REV R
B6	Changed R32 from 38.3 to 27.4 kΩ to prevent clipping of demod output.		REV T

RF Modulator Assembly A3, Demodulator/ALC Board Assembly A3A2, Schematic Diagram Figure 8 (Sheet A)

SCHEMATIC CHANGES

REVISION IDENTIFICATION	DESCRIPTION OF REVISION AND REASON FOR CHANGE	SERVICE BULLETIN	EFFECTIVITY
B7	Changed R38 from 2210 to 2320 Ω, R18 from 2530 to 2150 Ω, R14 from 10 to 14 kΩ, removed C14 from +24 V ac and connected to ground to change feedback characteristics of U12.		REV V

RF Modulator Assembly A3, Demodulator/ALC Board Assembly A3A2, Schematic Diagram Figure 8 (Sheet B)

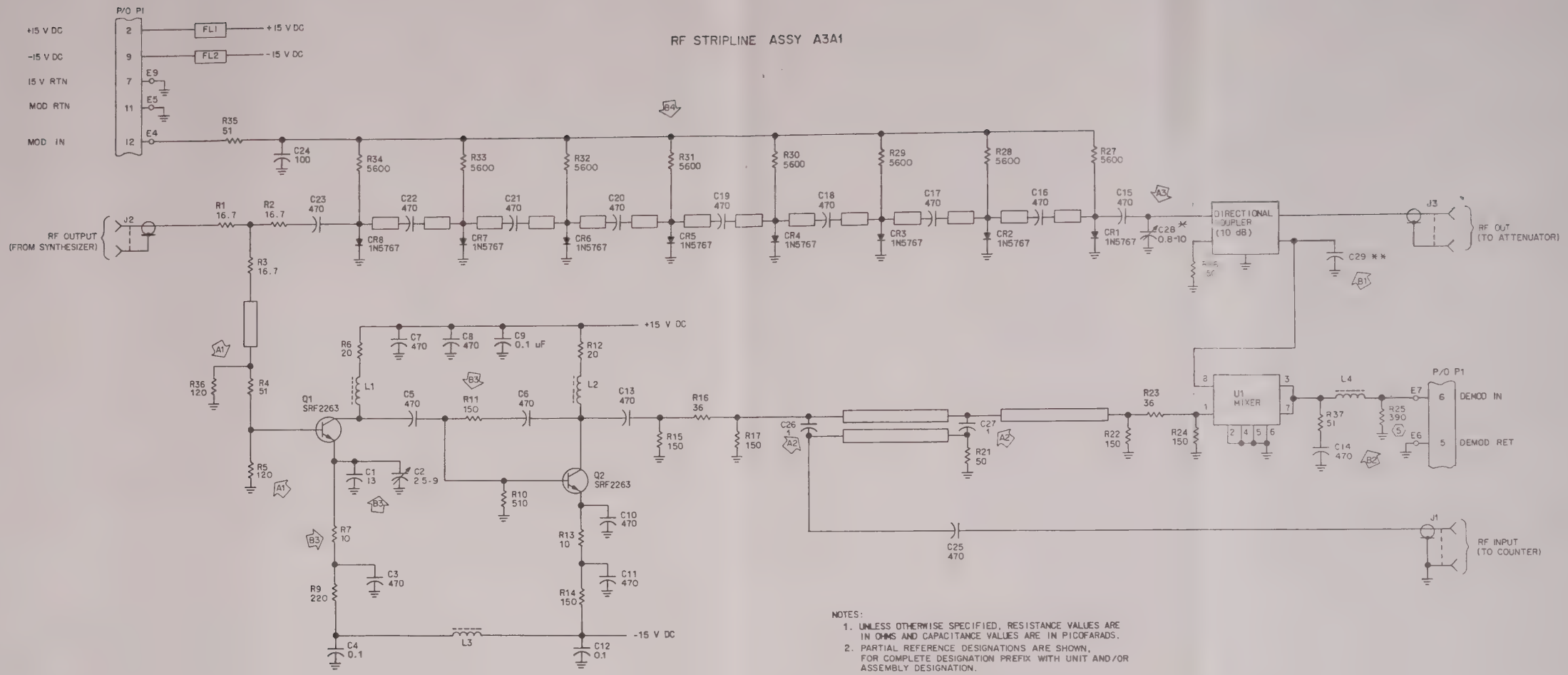

NOTES:

1. UNLESS OTHERWISE SPECIFIED, RESISTANCE VALUES ARE IN OHMS AND CAPACITANCE VALUES ARE IN PICOFARADS.
2. PARTIAL REFERENCE DESIGNATIONS ARE SHOWN, FOR COMPLETE DESIGNATION PREFIX WITH UNIT AND/OR ASSEMBLY DESIGNATION.
3. * MCN 309 AND UNDER VALUE IS 2.5-9pF
4. ** TEST SELECT (MAY NOT BE REQD IN SOME UNITS).
5. TEST SELECT COMPONENT. NOMINAL VALUE SHOWN.

637-8641
TP5-1124-014

RF Modulator Assembly A3, RF Strip Line Assembly A3A1, Schematic Diagram
Figure 7

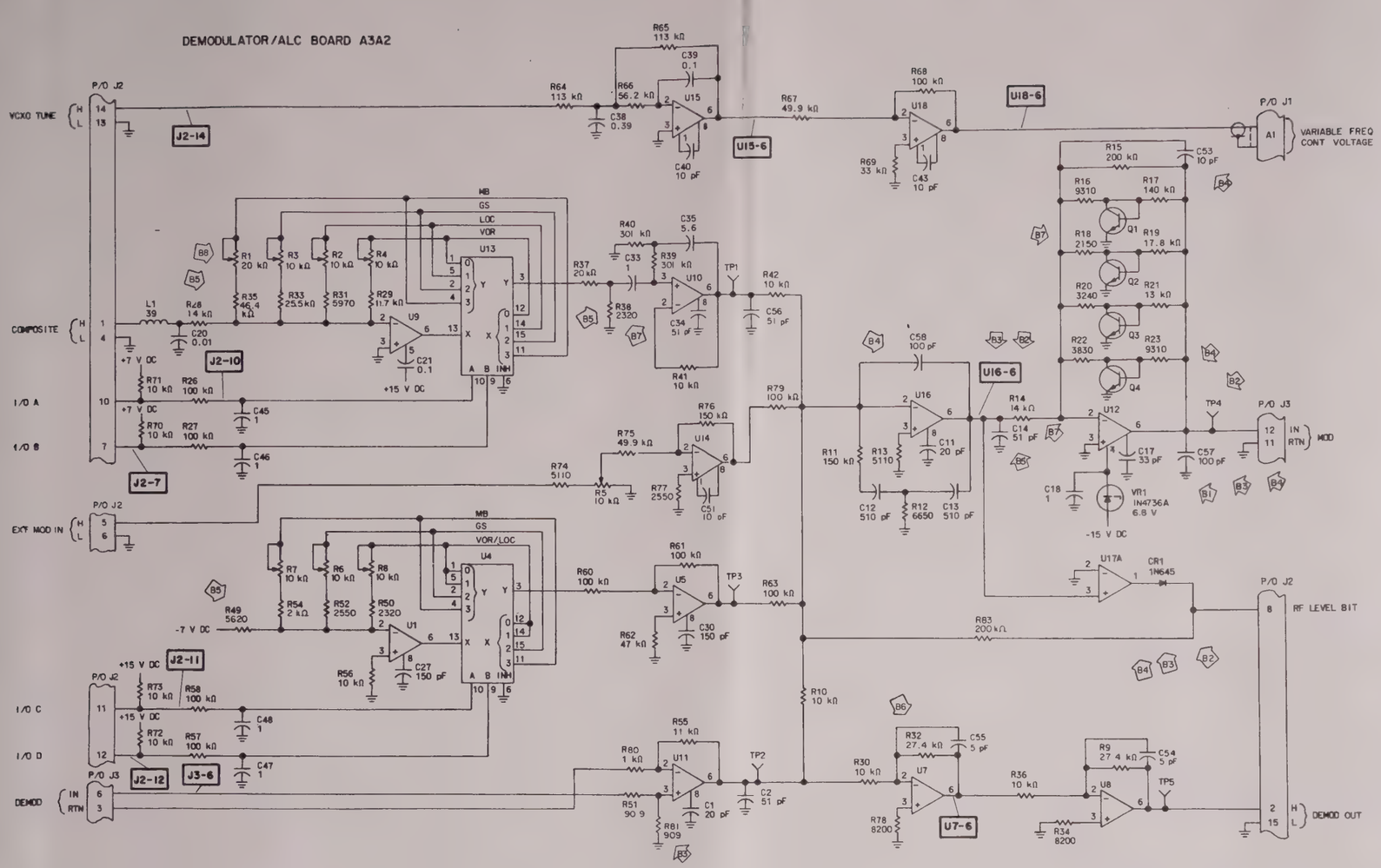

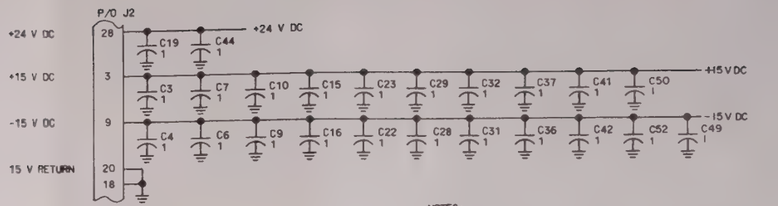

NOTES:
1. UNLESS OTHERWISE SPECIFIED RESISTANCE VALUES ARE IN OHMS, CAPACITANCE VALUES ARE IN MICROFARADS, INDUCTANCE VALUES ARE IN MICROHENRYS, AND TRANSISTOR TYPES ARE 2N2222A.
2. PARTIAL REFERENCE DESIGNATIONS ARE SHOWN; FOR COMPLETE DESIGNATION PREFIX WITH UNIT AND/OR ASSEMBLY DESIGNATION.

MICROCIRCUIT INFORMATION

UNX	TYPE	POWER (V DC)					
		+24	+15	+7	GND	-7	-15
U1	LM108A		7				4
U2	LM108A		7				4
U3	LM108A		7				4
(4) U4	CD4052AE		16		7,8		
U5	LM108A		7				4
U6	LM299A	SEE SCHEMATIC					
U7	LM218		7				4
U8	LM218		7				4
U9	LM218		7				4
U10	HA2625		7				4
U11	HA2625		7				4
U12	HA2625		7				4
(4) U13	CD4052AE			16	8	7	
U14	LM101A		7				4
U15	LM101A		7				4
U16	HA2625		7				4
U17	1558		8				4
U18	LM101A	7					4

(4) ELECTROSTATIC SENSITIVE DEVICES OBSERVE PRECAUTIONS FOR HANDLING

637-8642
TP5-1127-025

RF Modulator Assembly A3, Demodulator/ALC Board Assembly A3A2, Schematic Diagram
Figure 8

SCHEMATIC CHANGES

REVISION IDENTIFICATION	DESCRIPTION OF REVISION AND REASON FOR CHANGE	SERVICE BULLETIN	EFFECTIVITY
A1	Added C15 (330 pF) for noise filtering.		REV D
A2	Added R13 (510 Ω) to improve performance of prescaler circuit.		REV F

RF Modulator Assembly A3, Counter-I/O Board Assembly A3A3, Schematic Diagram
Figure 9 (Sheet A)

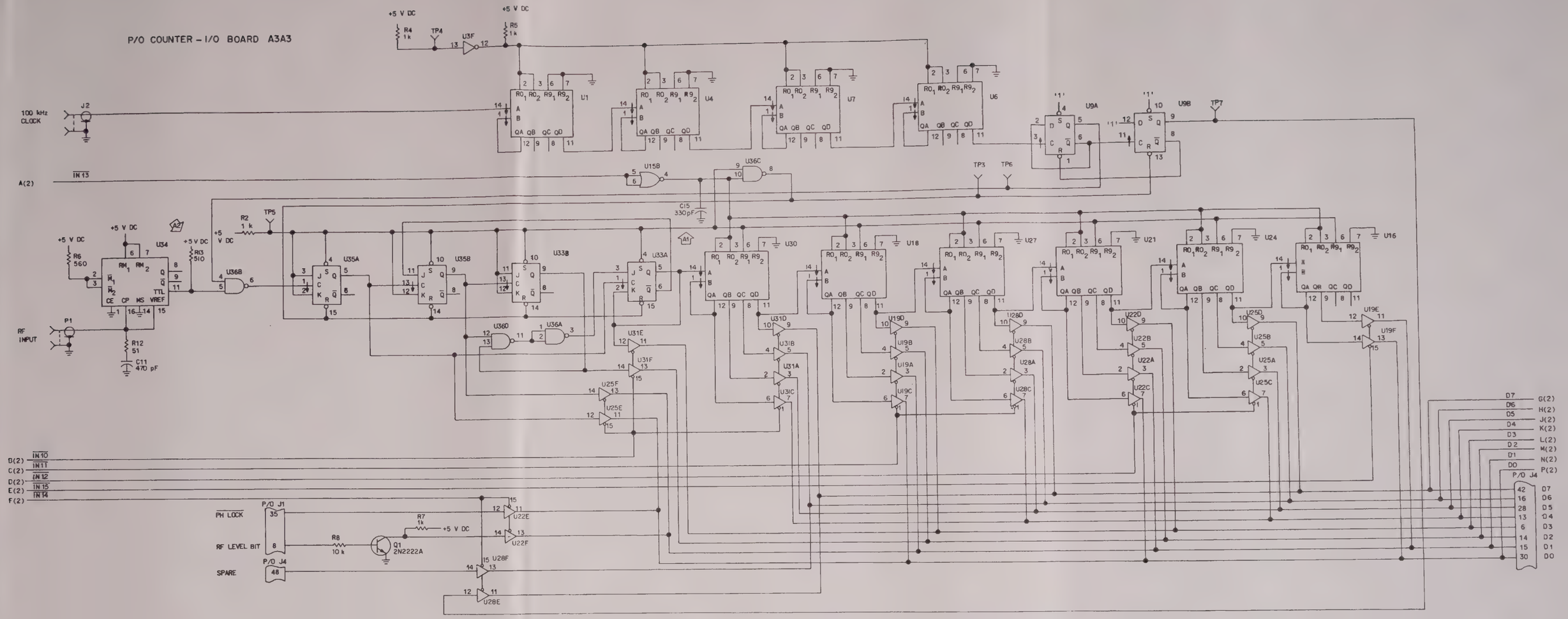

RF Modulator Assembly A3, Counter-I/O Board Assembly A3A3, Schematic Diagram
Figure 9 (Sheet 1 of 2)

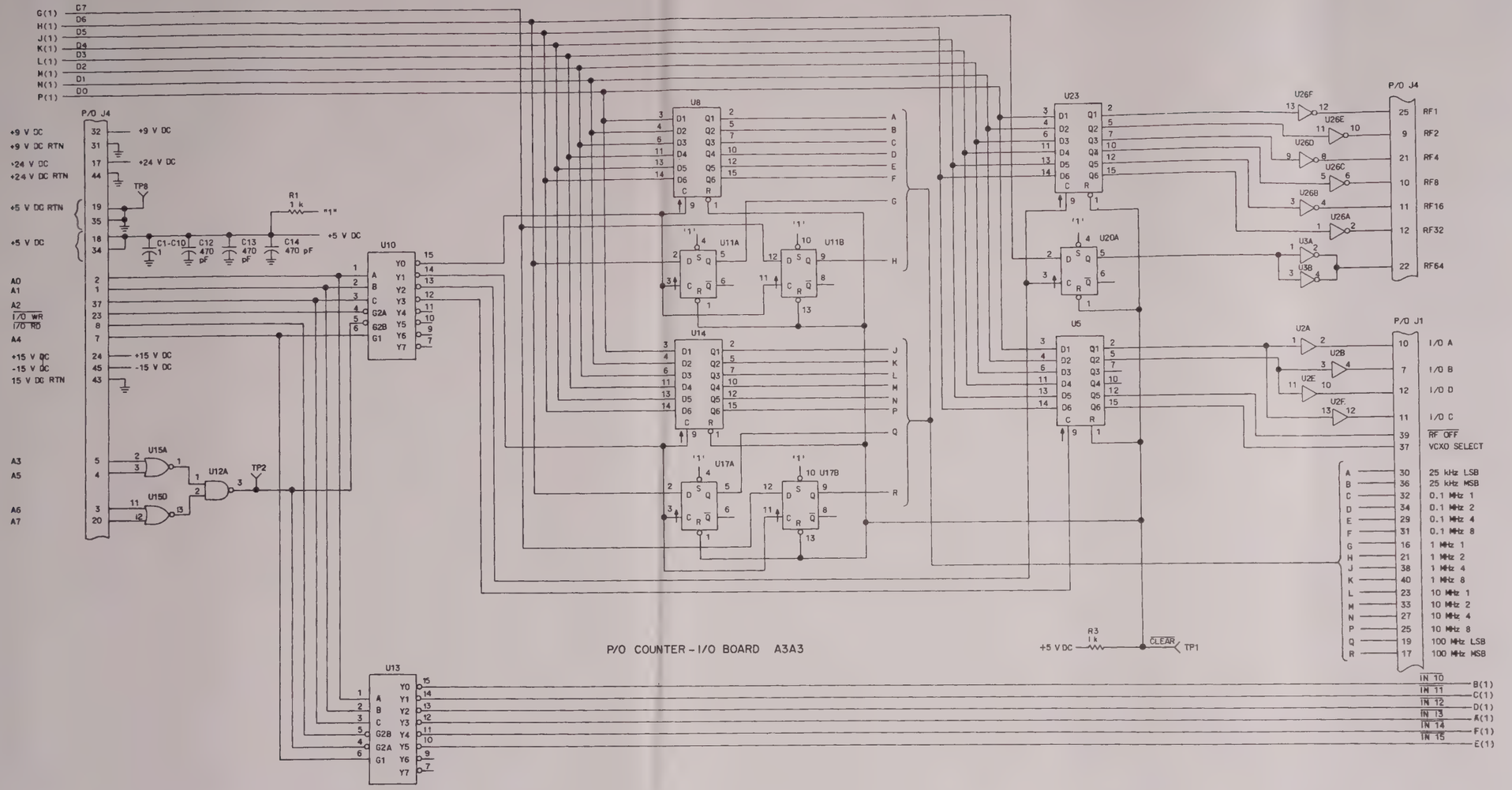

NOTES:

1. UNLESS OTHERWISE SPECIFIED RESISTANCE VALUES ARE IN OHMS AND CAPACITANCE VALUES ARE IN MICROFARADS.
2. PARTIAL REFERENCE DESIGNATIONS ARE SHOWN FOR COMPLETE DESIGNATION PREFIX WITH UNIT AND/OR ASSEMBLY DESIGNATION.

MICROCIRCUIT INFORMATION:

U NO.	TYPE	POWER (V DC) +5V	POWER (V DC) GND
U1	74LS90	5	10
U2	5407	14	7
U3	7406	14	7
U4	74LS90	5	10
U5	74LS174	16	8
U6	74LS90	5	10
U7	74LS90	5	10
U8	74LS174	16	8
U9	74LS74	14	7
U10	74LS138	16	8
U11	74LS74	14	7
U12	74LS00	14	7
U13	74LS138	16	8
U14	74LS174	16	8
U15	74LS02	14	7
U16	74LS90	5	10
U17	74LS74	14	7
U18	74LS90	5	10
U19	8T97	16	8
U20	74LS74	14	7
U21	74LS90	5	10
U22	8T97	16	8
U23	74LS174	16	8
U24	74LS90	5	10
U25	8T97	16	8
U26	7406	14	7
U27	74LS90	5	10
U28	8T97	16	8
U29			
U30	74LS90	5	10
U31	8T97	16	8
U32			
U33	74LS112	16	8
U34	11C90	4,5	12,13
U35	74S112	16	8
U36	74S00	14	7

637-8643

RF Modulator Assembly A3, Counter-I/O Board Assembly A3A3, Schematic Diagram
Figure 9 (Sheet 2)

SCHEMATIC CHANGES

REVISION IDENTIFICATION	DESCRIPTION OF REVISION AND REASON FOR CHANGE	SERVICE BULLETIN	EFFECTIVITY
A1	Changed R1 from 5600 to 6200 Ω, R2 from 1800 to 1300 Ω, and R11 from 15 kΩ to 4300 Ω to improve performance of variable frequency oscillator circuit.		REV F to A4A1A1
A2	Changed R16 from 1500 to 680 Ω to improve 12-volt regulation at Q1 collector.		REV G to A4A1A1
A3	Changed C39 from 300 to 33 pF and added R60 (91 Ω) to improve signal level to variable divider circuit.		REV J to A4A1A1
B1	Changed R6 from 221 to 63.4 Ω, R9 from 5110 to 1070 Ω, R17 from 51 to 100 Ω; added R18 (15 Ω) and, to E7 on vco, R19 (100 Ω) to reduce incidental FM of A4A2.		REV K
B2	Added sheet 3 to show A4A2 CPN 634-9681-001.		NA
B3	Added sheet 4 to aid in troubleshooting.		NA

Synthesizer Assembly A4, Schematic Diagram
Figure 10 (Sheet A)

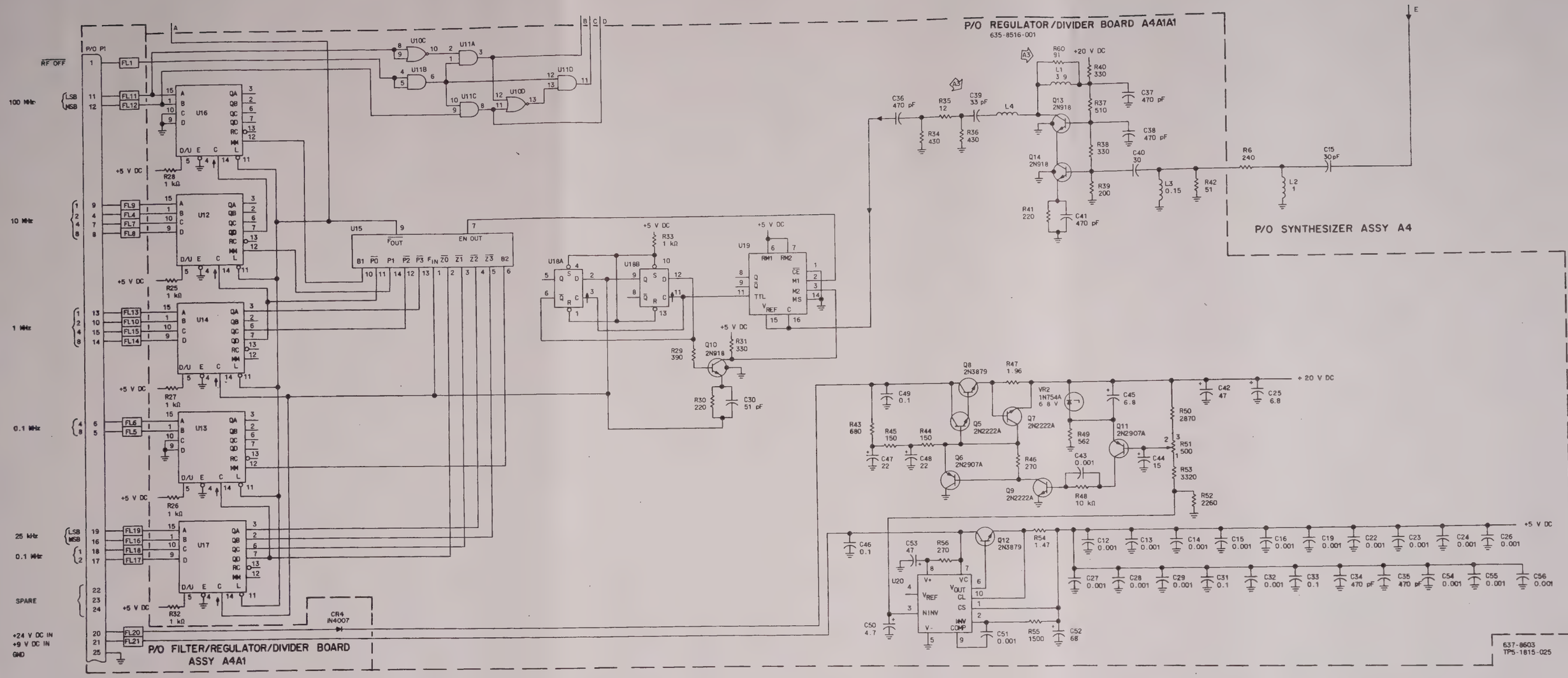

Synthesizer Assembly A4, Schematic Diagram
Figure 10 (Sheet 1 of 4)

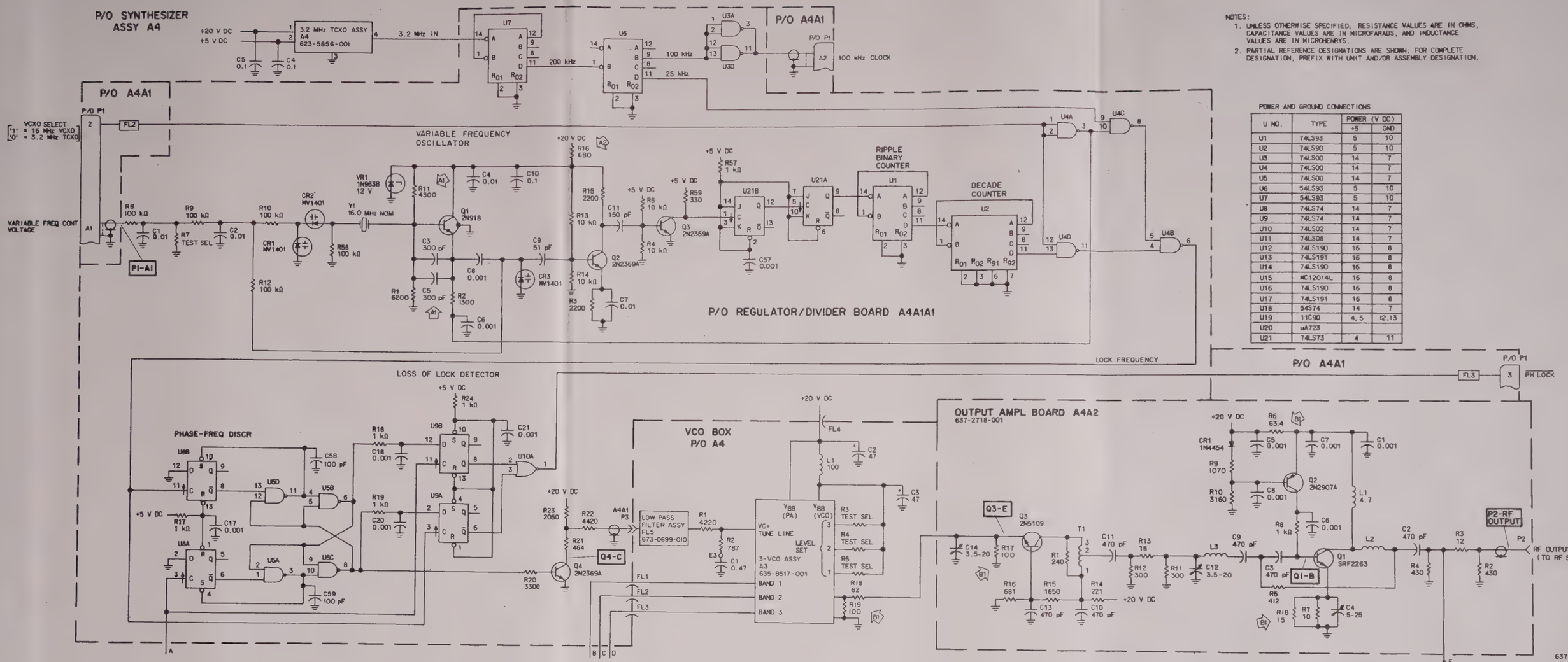

NOTES:
1. UNLESS OTHERWISE SPECIFIED, RESISTANCE VALUES ARE IN OHMS, CAPACITANCE VALUES ARE IN MICROFARADS, AND INDUCTANCE VALUES ARE IN MICROHENRYS.
2. PARTIAL REFERENCE DESIGNATIONS ARE SHOWN; FOR COMPLETE DESIGNATION, PREFIX WITH UNIT AND/OR ASSEMBLY DESIGNATION.

POWER AND GROUND CONNECTIONS

U NO.	TYPE	POWER (V DC)	
		+5	GND
U1	74LS93	5	10
U2	74LS90	5	10
U3	74LS00	14	7
U4	74LS00	14	7
U5	74LS00	14	7
U6	54LS93	5	10
U7	54LS93	5	10
U8	74LS74	14	7
U9	74LS74	14	7
U10	74LS02	14	7
U11	74LS08	14	7
U12	74LS190	16	8
U13	74LS191	16	8
U14	74LS190	16	8
U15	MC12014L	16	8
U16	74LS190	16	8
U17	74LS191	16	8
U18	54S74	14	7
U19	11C90	4, 5	12, 13
U20	uA723		
U21	74LS73	4	11

Synthesizer Assembly A4 (With A4A2 CPN 637-2718-001), Schematic Diagram
Figure 10 (Sheet 2)

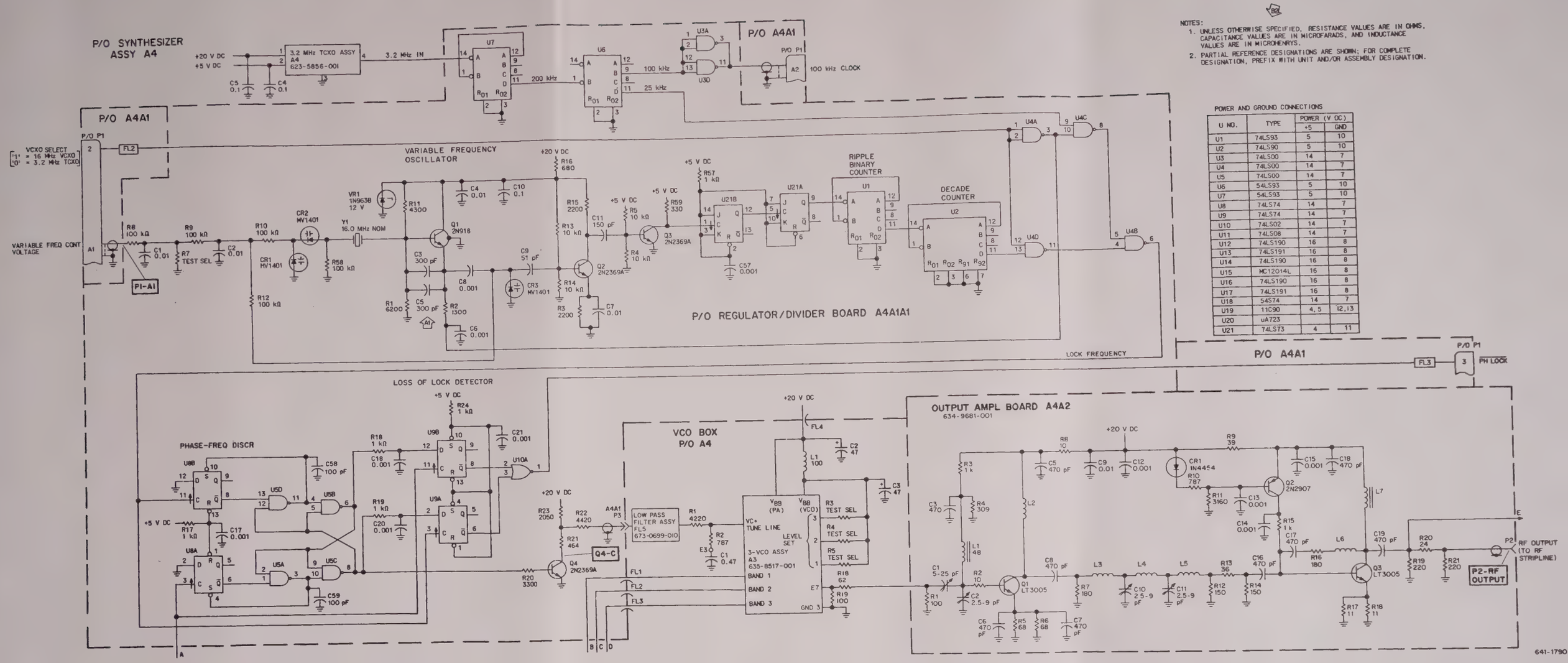

NOTES:
1. UNLESS OTHERWISE SPECIFIED, RESISTANCE VALUES ARE IN OHMS, CAPACITANCE VALUES ARE IN MICROFARADS, AND INDUCTANCE VALUES ARE IN MICROHENRYS.
2. PARTIAL REFERENCE DESIGNATIONS ARE SHOWN; FOR COMPLETE DESIGNATION, PREFIX WITH UNIT AND/OR ASSEMBLY DESIGNATION.

POWER AND GROUND CONNECTIONS

U NO.	TYPE	POWER (V DC)	
		+5	GND
U1	74LS93	5	10
U2	74LS90	5	10
U3	74LS00	14	7
U4	74LS00	14	7
U5	74LS00	14	7
U6	54LS93	5	10
U7	54LS93	5	10
U8	74LS74	14	7
U9	74LS74	14	7
U10	74LS02	14	7
U11	74LS08	14	7
U12	74LS190	16	8
U13	74LS191	16	8
U14	74LS190	16	8
U15	MC12014L	16	8
U16	74LS190	16	8
U17	74LS191	16	8
U18	54S74	14	7
U19	11C90	4, 5	12, 13
U20	uA723		
U21	74LS73	4	11

Synthesizer Assembly A4 (With A4A2 CPN 634-9681-001), Schematic Diagram
Figure 10 (Sheet 3)

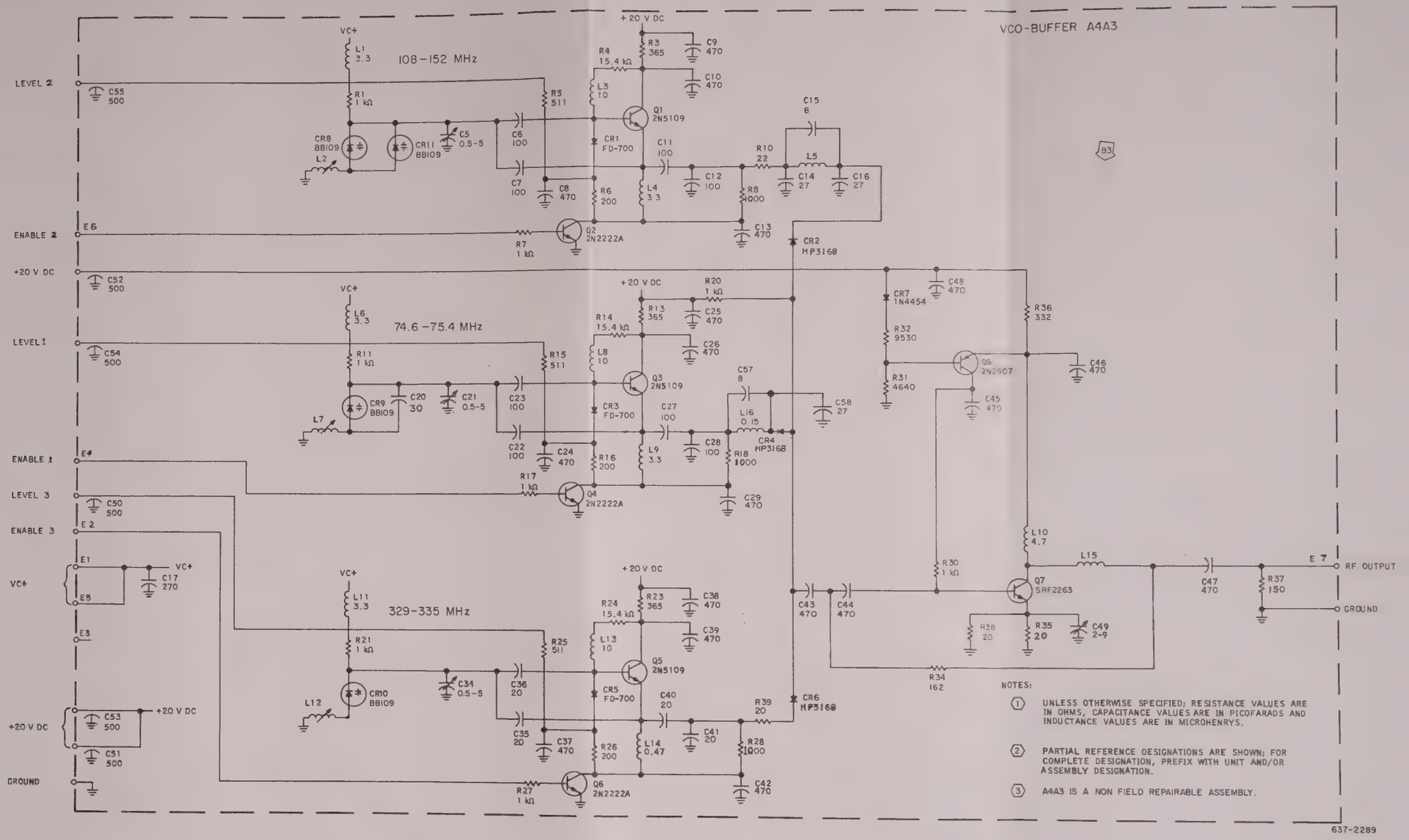

Synthesizer Assembly A4, Schematic Diagram
Figure 10 (Sheet 4)

SCHEMATIC CHANGES

REVISION IDENTIFICATION	DESCRIPTION OF REVISION AND REASON FOR CHANGE	SERVICE BULLETIN	EFFECTIVITY
B1	Changed H and L sides of V AC IN on A5J4, added terminals 1 and 2 at fuse F1, changed C11 from 470 to 1000 pF and C2 from 470 to 1000 pF to put fuse on H side of input and to increase compensation for U1 and U2.		REV J

Power Supply Assembly A5, Schematic Diagram
Figure 11 (Sheet A)

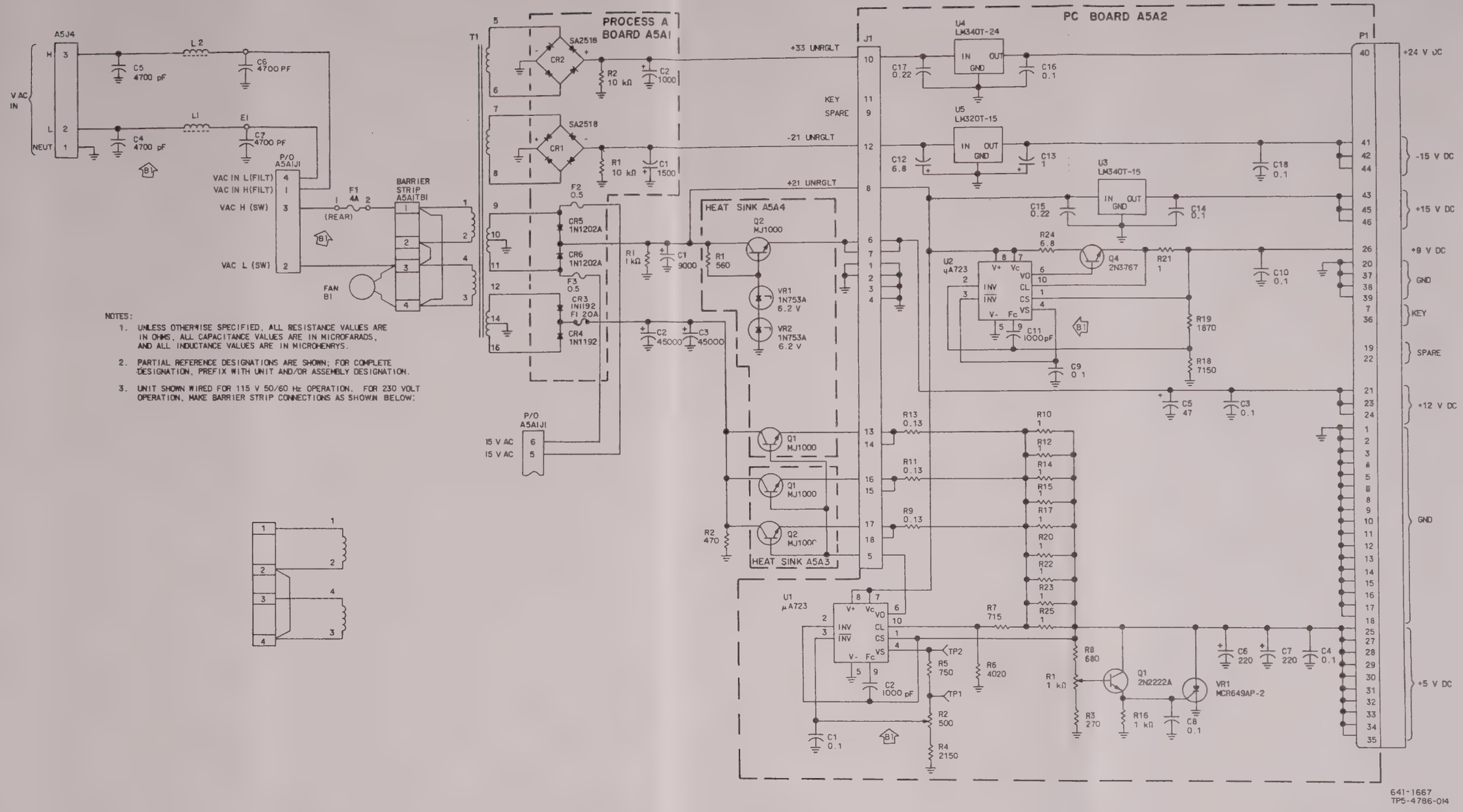

NOTES:

1. UNLESS OTHERWISE SPECIFIED, ALL RESISTANCE VALUES ARE IN OHMS, ALL CAPACITANCE VALUES ARE IN MICROFARADS, AND ALL INDUCTANCE VALUES ARE IN MICROHENRYS.
2. PARTIAL REFERENCE DESIGNATIONS ARE SHOWN; FOR COMPLETE DESIGNATION, PREFIX WITH UNIT AND/OR ASSEMBLY DESIGNATION.
3. UNIT SHOWN WIRED FOR 115 V 50/60 Hz OPERATION. FOR 230 VOLT OPERATION, MAKE BARRIER STRIP CONNECTIONS AS SHOWN BELOW:

Power Supply Assembly A5, Schematic Diagram
Figure 11

INTERCONNECT DIAGRAM CHANGES

REVISION IDENTIFICATION	DESCRIPTION OF REVISION AND REASON FOR CHANGE	SERVICE BULLETIN	EFFECTIVITY
	(This page will contain interconnect revision information.)		

Backplane Assembly A7, Interconnect Diagram
Figure 12 (Sheet A)

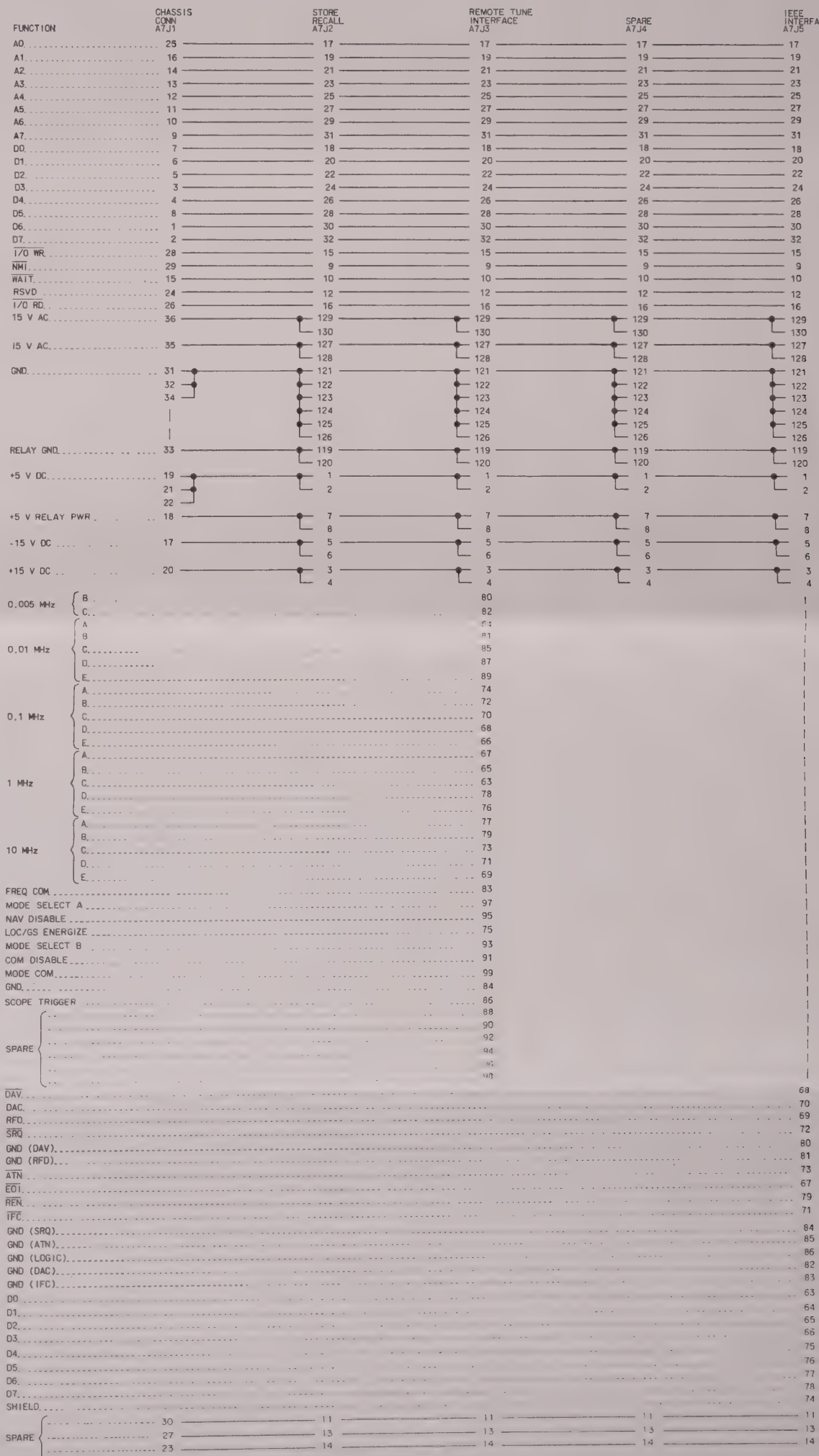

Backplane Assembly A7, Interconnect Diagram
Figure 12

641-1673
TP5-4787-014

SCHEMATIC CHANGES

REVISION IDENTIFICATION	DESCRIPTION OF REVISION AND REASON FOR CHANGE	SERVICE BULLETIN	EFFECTIVITY
	(This page will contain schematic revision information.)		

Remote Tune Assembly A8, Schematic Diagram
Figure 13 (Sheet A)

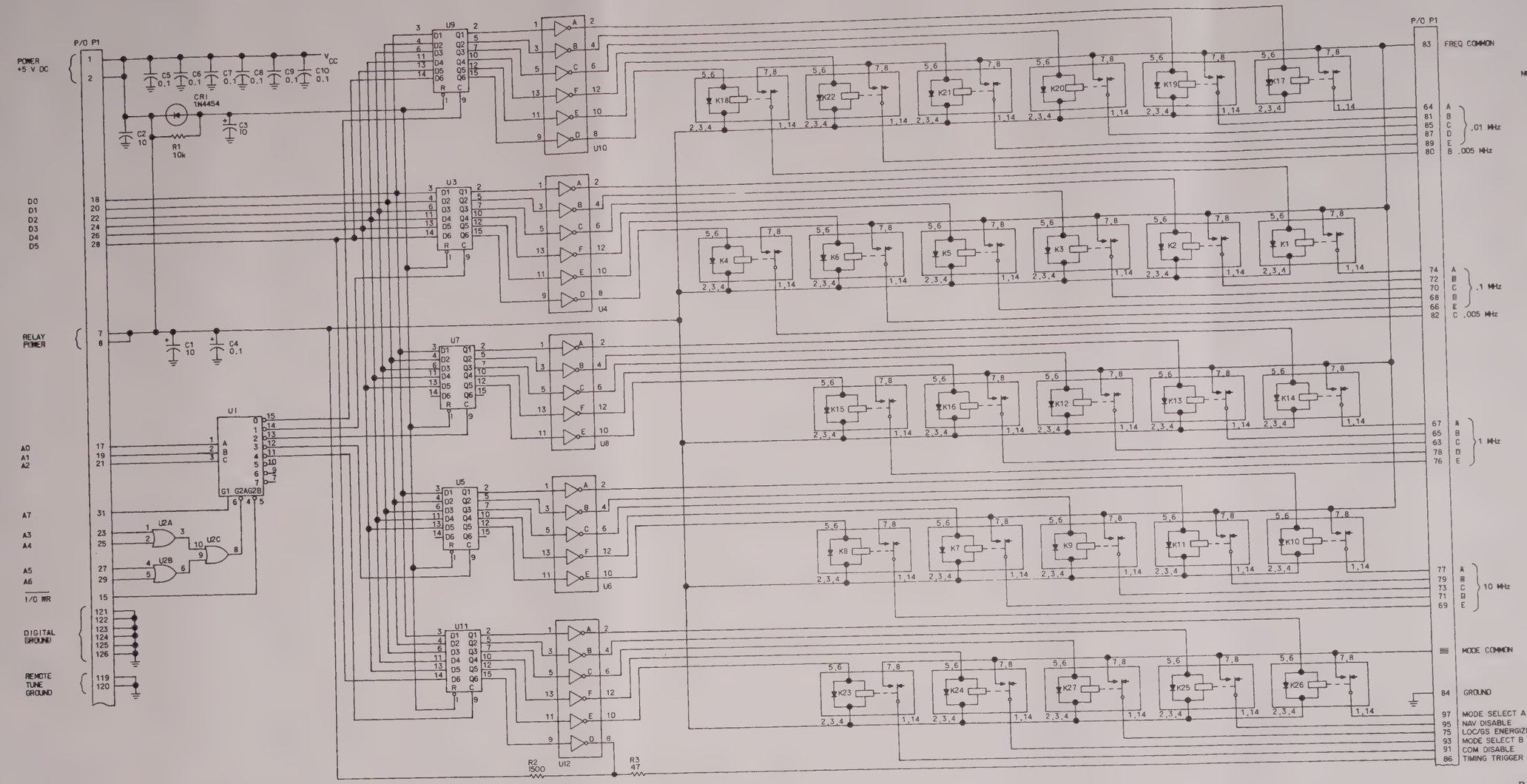

NOTES:

1. UNLESS OTHERWISE SPECIFIED, RESISTANCE VALUES ARE IN OHMS AND CAPACITANCE VALUES ARE IN MICROFARADS.
2. PARTIAL REFERENCE DESIGNATIONS ARE SHOWN FOR COMPLETE DESIGNATION PREFIX WITH UNIT AND/OR ASSY DESIGNATION.

MICROCIRCUIT INFORMATION

U NO	TYPE	VCC	GND	SPARE
U1	74LS138	16	8	7,9,10
U2	74LS32	14	7	SECTION D
U3,9	74LS174	16	8	
U5,7,11	74LS174	16	8	14,15
U4,10	7406	14	7	
U6,8,12	7406	14	7	SECTION D

641-1682
TP5-4785-015

Remote Tune Assembly A8, Schematic Diagram
Figure 13

SCHEMATIC CHANGES

REVISION IDENTIFICATION	DESCRIPTION OF REVISION AND REASON FOR CHANGE	SERVICE BULLETIN	EFFECTIVITY
	(This page will contain schematic revision information.)		

Chassis Wiring Harness, Schematic Diagram
Figure 14 (Sheet A)

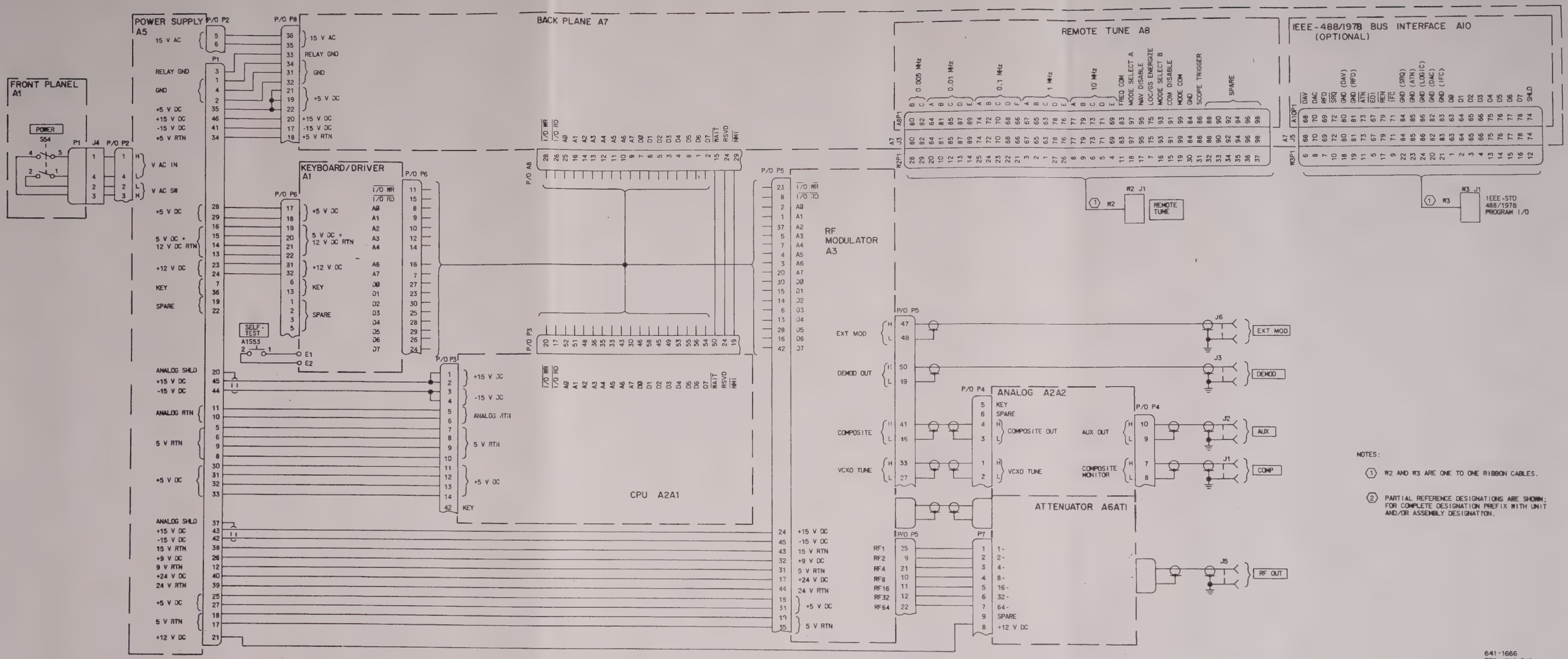

NOTES:

1. W2 AND W3 ARE ONE TO ONE RIBBON CABLES.
2. PARTIAL REFERENCE DESIGNATIONS ARE SHOWN; FOR COMPLETE DESIGNATION PREFIX WITH UNIT AND/OR ASSEMBLY DESIGNATION.

641-1666
TP5-4782-015

Chassis Wiring Harness, Schematic Diagram
Figure 14

SCHEMATIC CHANGES

REVISION IDENTIFICATION	DESCRIPTION OF REVISION AND REASON FOR CHANGE	SERVICE BULLETIN	EFFECTIVITY
B1	Replaced obsolete parts U2, U6, U9, U10, U14, U18, U22, U23, ER3401 with ER3400. Also changed CR10 from LVA100A to 1N758A.		REV C
B2	Changed software to allow selection of 329 MIIz. Removed U10 and U14; added 8T97 diagram.		REV E

Store/Recall Assembly A9, Schematic Diagram
(CPN 622-4127-002, -003 Only)
Figure 15 (Sheet A)

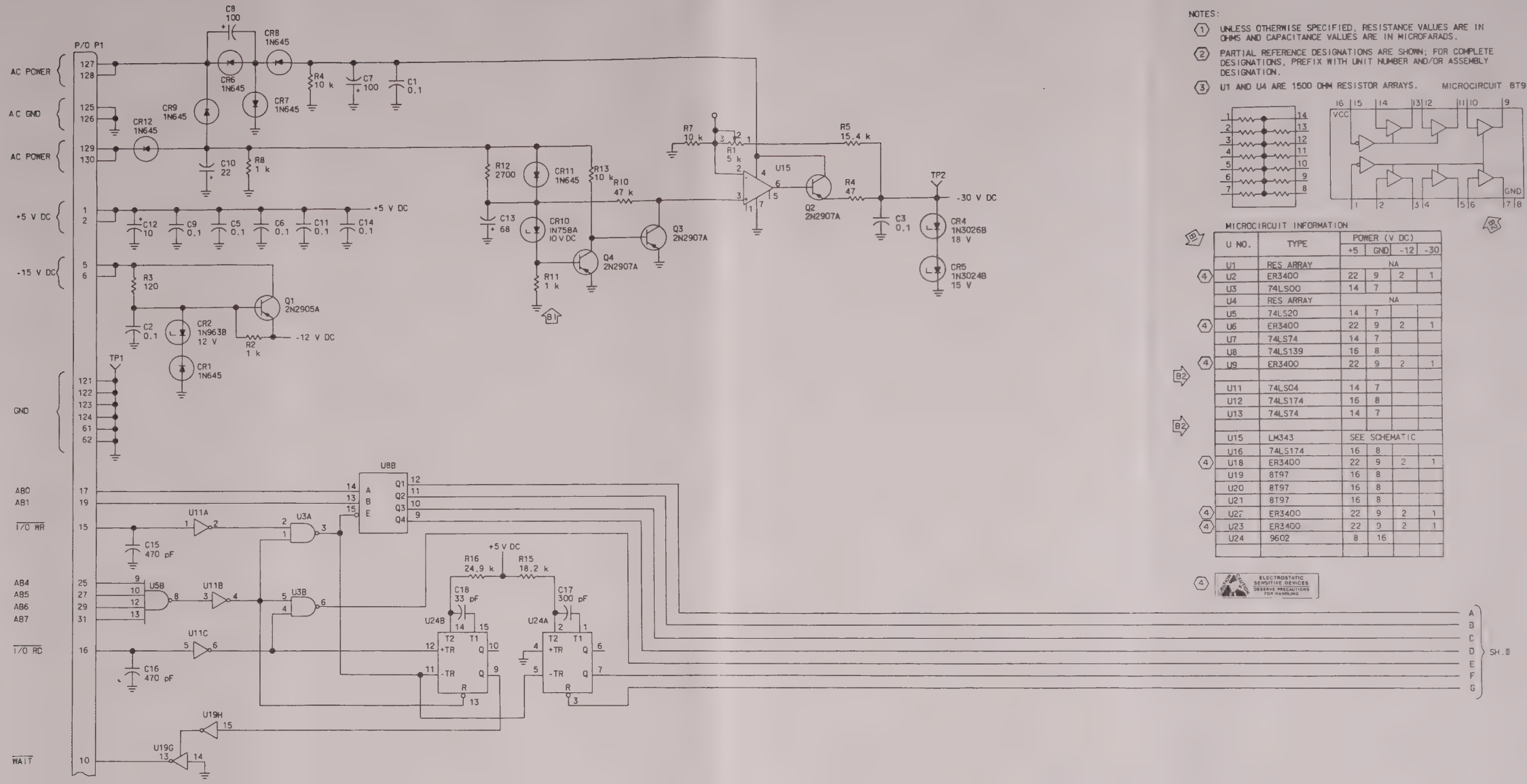

NOTES:

1. UNLESS OTHERWISE SPECIFIED, RESISTANCE VALUES ARE IN OHMS AND CAPACITANCE VALUES ARE IN MICROFARADS.
2. PARTIAL REFERENCE DESIGNATIONS ARE SHOWN; FOR COMPLETE DESIGNATIONS, PREFIX WITH UNIT NUMBER AND/OR ASSEMBLY DESIGNATION.
3. U1 AND U4 ARE 1500 OHM RESISTOR ARRAYS.

MICROCIRCUIT 8T97

MICROCIRCUIT INFORMATION

U NO.	TYPE	POWER (V DC) +5	GND	-12	-30
U1	RES ARRAY	NA			
4 U2	ER3400	22	9	2	1
U3	74LS00	14	7		
U4	RES ARRAY	NA			
U5	74LS20	14	7		
4 U6	ER3400	22	9	2	1
U7	74LS74	14	7		
U8	74LS139	16	8		
4 U9	ER3400	22	9	2	1
U11	74LS04	14	7		
U12	74LS174	16	8		
U13	74LS74	14	7		
U15	LM343	SEE SCHEMATIC			
U16	74LS174	16	8		
4 U18	ER3400	22	9	2	1
U19	8T97	16	8		
U20	8T97	16	8		
U21	8T97	16	8		
4 U22	ER3400	22	9	2	1
4 U23	ER3400	22	9	2	1
U24	9602	8	16		

4 ELECTROSTATIC SENSITIVE DEVICES OBSERVE PRECAUTIONS FOR HANDLING

641-1681
TP5-4784-024

Store/Recall Assembly A9, Schematic Diagram
(CPN 622-4127-002, -003 Only)
Figure 15 (Sheet 1 of 2)

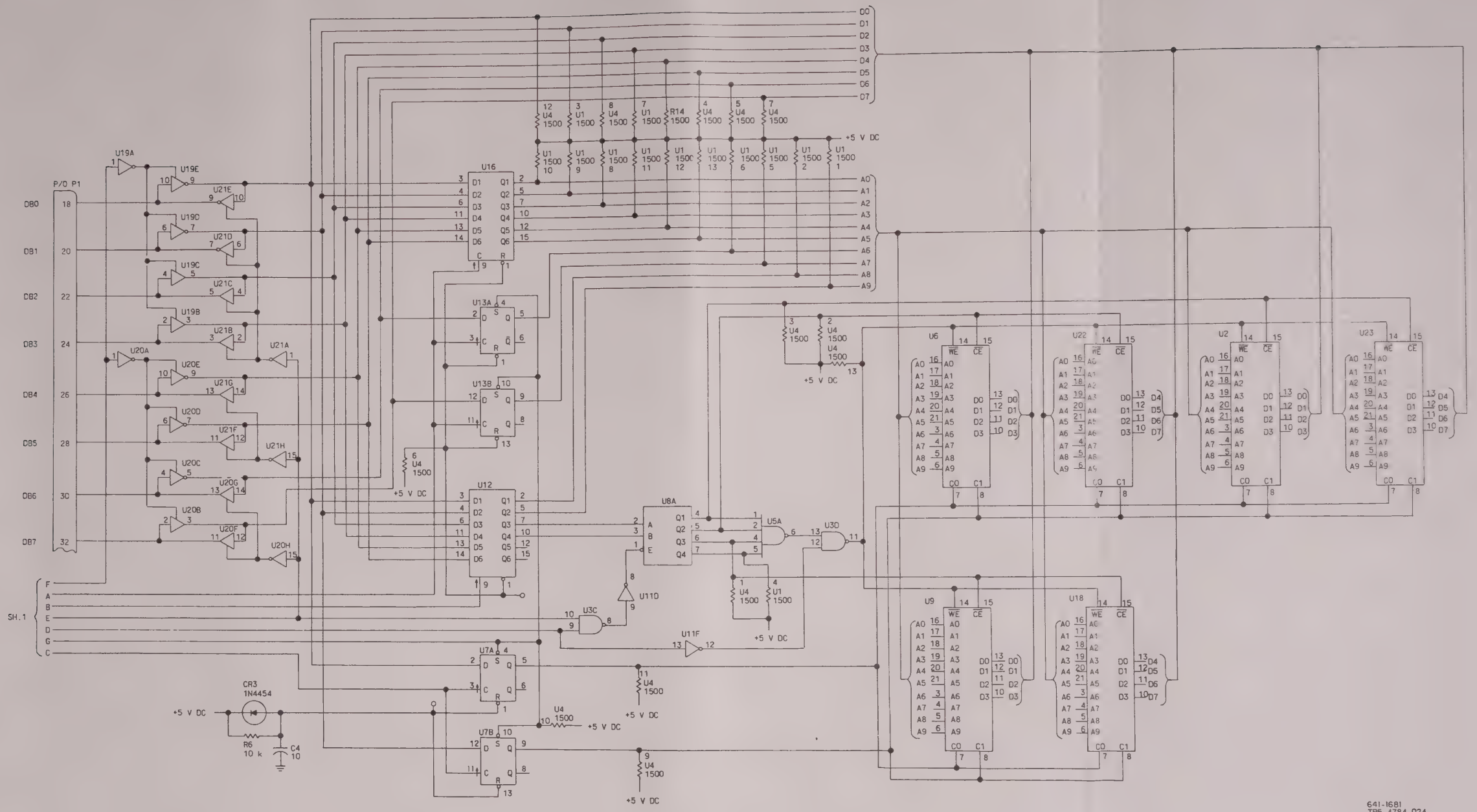

Store/Recall Assembly A9, Schematic Diagram
(CPN 622-4127-002, -003 Only)
Figure 15 (Sheet 2)

SCHEMATIC CHANGES

REVISION IDENTIFICATION	DESCRIPTION OF REVISION AND REASON FOR CHANGE	SERVICE BULLETIN	EFFECTIVITY
B1	Added R11 and R12 (1 kΩ) and made several cuts and adds to improve performance.		REV C
B2	Added U18 74LS86 to provide proper decoding of the talk/listen address.		REV E

IEEE-488/1978 Bus Interface Assembly A10 (CPN 601-5883-001), Schematic Diagram (479S-6A CPN 622-4127-003, -004 Only)
Figure 16 (Sheet A)

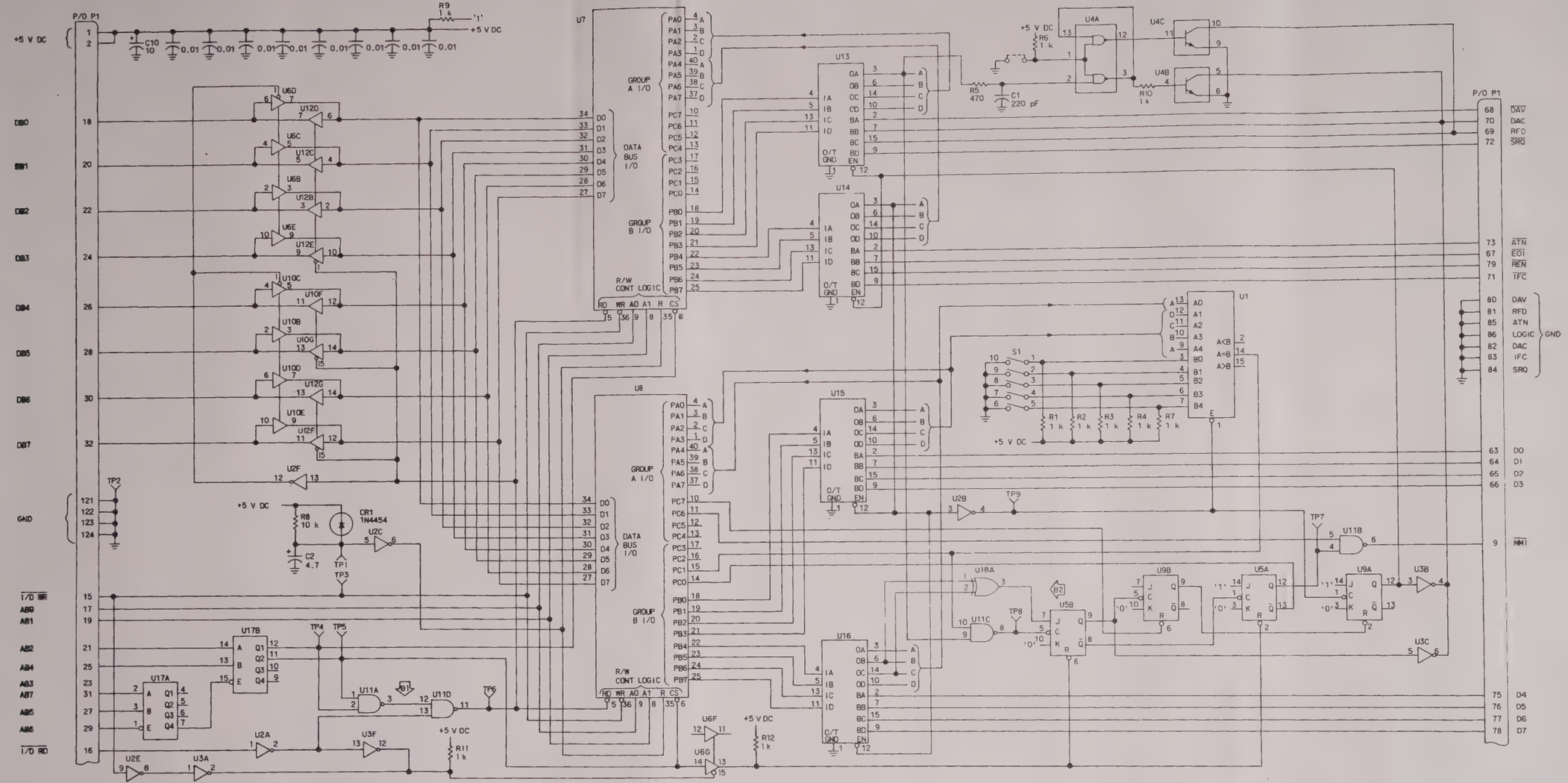

NOTES:

1. UNLESS OTHERWISE SPECIFIED, RESISTANCE VALUES ARE IN OHMS AND CAPACITANCE VALUES ARE IN MICROFARADS.
2. PARTIAL REFERENCE DESIGNATIONS ARE SHOWN; FOR COMPLETE DESIGNATIONS, PREFIX WITH UNIT NUMBER AND/OR ASSEMBLY DESIGNATION

MICROCIRCUIT INFORMATION

U NO	TYPE	POWER (V DC) +5 V	POWER (V DC) GND
U1	9324	16	8
U2	74LS04	14	7
U3	7406	14	7
U4	75450	14	7
U5	74LS73	4	11
U6	8T97	16	8
3 U7	8255	26	7
3 U8	8255	26	7
U9	74LS73	4	11
U10	8T97	16	8
U11	74LS00	14	7
U12	8T97	16	8
U13	MC3441	16	8
U14	MC3441	16	8
U15	MC3441	16	8
U16	MC3441	16	8
B2 U18	74LS86	14	7

3 ELECTROSTATIC SENSITIVE DEVICES OBSERVE PRECAUTIONS FOR HANDLING

641-1675
TP5-4783-015

IEEE-488/1978 Bus Interface Assembly A10 (CPN 601-5883-001), Schematic Diagram (479S-6A CPN 622-4127-003, -004 Only)
Figure 16.

SCHEMATIC CHANGES

REVISION IDENTIFICATION	DESCRIPTION OF REVISION AND REASON FOR CHANGE	SERVICE BULLETIN	EFFECTIVITY
	(This page will contain schematic revision information.)		

IEEE-488/1978 Bus Interface Assembly A10 (CPN 601-2309-001), Schematic Diagram (479S-6A CPN 622-4127-003, -004 Only) Figure 17 (Sheet A)

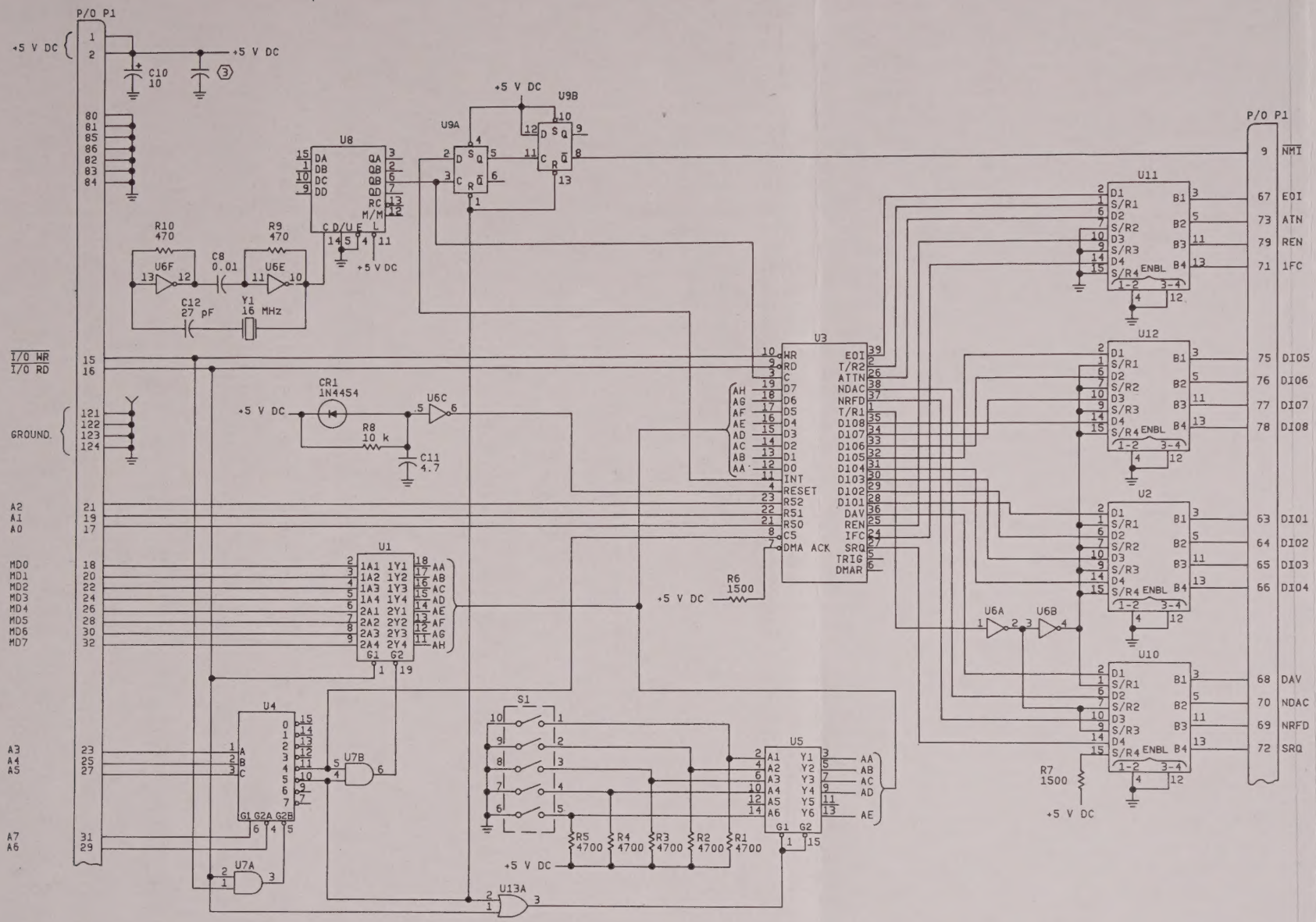

NOTES:

MICROCIRCUIT INFORMATION

	U NO.	TYPE	PWR (V DC) +5	GND	SPARE SECTIONS
	U1	54LS245	20	10	
	U2	3448	16	8	
(4)	U3	8291	40	20	
	U4	54LS138	16	8	
	U5	54LS367	16	8	
	U6	54LS04	14	7	D
	U7	54LS08	14	7	C,D
	U8	54LS191	16	8	
	U9	54LS74	14	7	
	U10	3448	16	8	
	U11	3448	16	8	
	U12	3448	16	8	
	U13	54LS32	14	7	B,C,D

(1) UNLESS OTHERWISE SPECIFIED RESISTANCE VALUES ARE IN OHMS, AND INDUCTANCE VALUES ARE IN MICROHENRYS.

(2) PARTIAL REFERENCE DESIGNATIONS ARE SHOWN, FOR COMPLETE DESIGNATIONS PREFIX WITH UNIT NUMBER AND/OR ASSEMBLY DESIGNATION.

(3) CAPACITORS C1 THRU C7, C9, C13, C14, AND C15. VALUES ARE 0.01 MICROFARADS.

(4) ELECTROSTATIC SENSITIVE DEVICES OBSERVE PRECAUTIONS FOR HANDLING

642-8262

IEEE-488/1978 Bus Interface Assembly A10 (CPN 601-2309-001). Schematic Diagram (479S-6A CPN 622-4127-003, -004 Only)
Figure 17

www.manualsplus.com
1026693